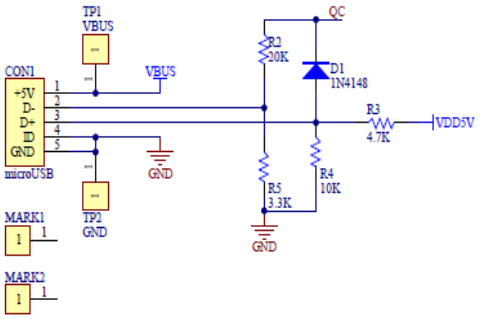
TP1
VBUS
CON1
+5V
D-
D+
ID
GND
microUSB
VBUS
GND
TP2
GND
MARK1
MARK2
QC
R2
20K
D1
1N4148
R3
4.7K
VDD5V
R5
3.3K
R4
10K
GND

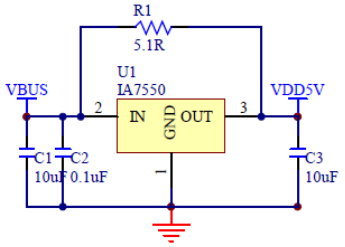
R1
5.1R
U1
IA7550
VBUS
IN
GND
OUT
VDD5V
C1
10uF
C2
0.1uF
C3
10uF

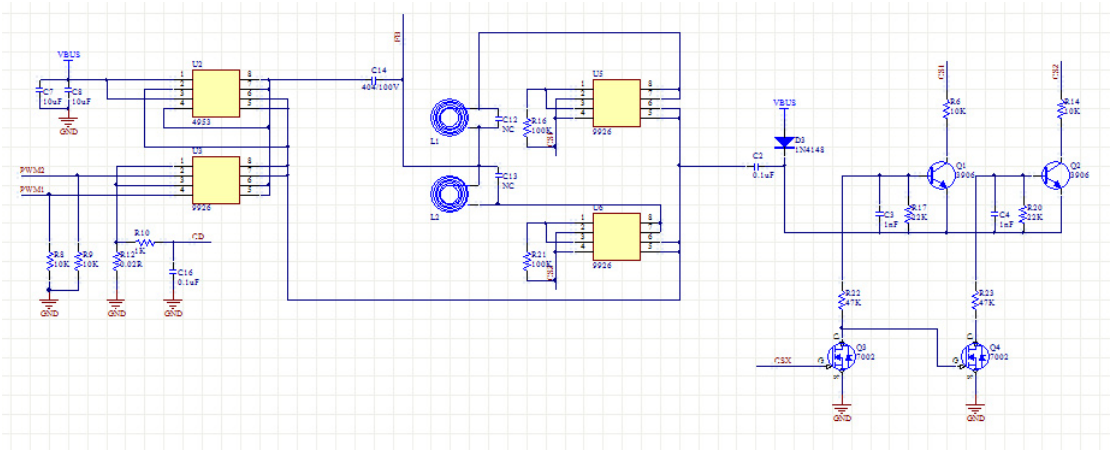
VBUS
C7
10uF
C8
10uF
GND
U2
4953
U3
9926
PWM2
PWM1
R8
10K
R9
10K
R10
1K
R12
0.02R
GD
C16
0.1uF
C14
404/100V
FB
L1
L2
C12
NC
C13
NC
R16
100K
R21
100K
U5
9926
U6
9926
C2
0.1uF
D3
1N4148
CS1
CS2
R6
10K
R14
10K
Q1
3906
Q2
3906
C3
1nF
R17
22K
C4
1nF
R20
22K
R22
47K
R23
47K
Q3
7002
Q4
7002
GSX

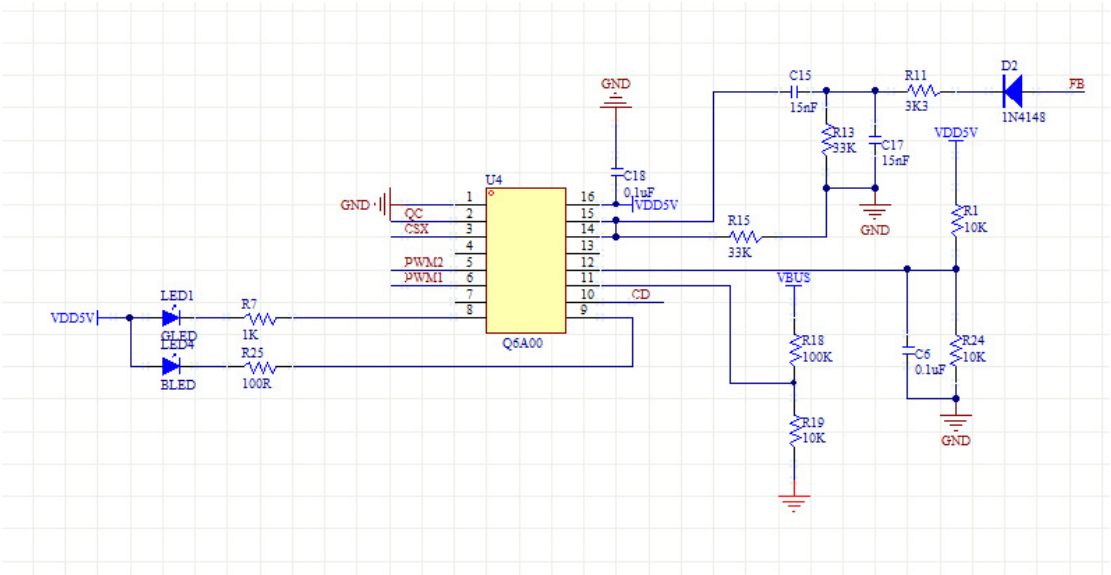
GND
C15
15nF
R11
3K3
D2
1N4148
FB
R13
33K
C17
15nF
VDD5V
GND
R1
10K
U4
GND
QC
CSX
PWM2
PWM1
C18
0.1uF
VDD5V
R15
33K
VBUS
CD
Q6A00
LED1
GLED
LED4
BLED
VDD5V
R7
1K
R25
100R
R18
100K
R19
10K
C6
0.1uF
R24
10K
GND