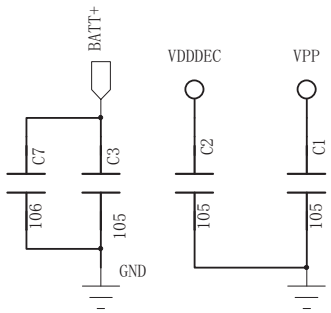
BATT+
VDDDEC
VPP
C7
C3
C2
C1
106
105
105
105
GND

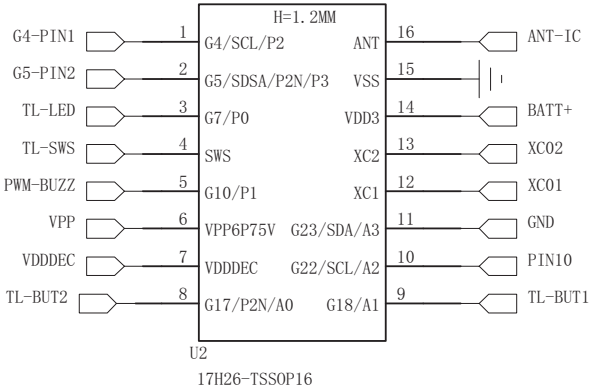
H=1.2MM
G4-PIN1
G5-PIN2
TL-LED
TL-SWS
PWM-BUZZ
VPP
VDDDEC
TL-BUT2
1 G4/SCL/P2
2 G5/SDSA/P2N/P3
3 G7/P0
4 SWS
5 G10/P1
6 VPP6P75V
7 VDDDEC
8 G17/P2N/A0
ANT 16
VSS 15
VDD3 14
XC2 13
XC1 12
G23/SDA/A3 11
G22/SCL/A2 10
G18/A1 9
ANT-IC
BATT+
XC02
XC01
GND
PIN10
TL-BUT1
U2
17H26-TSSOP16

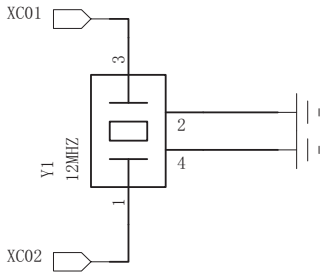
XC01
XC02
Y1
12MHZ
1
2
3
4

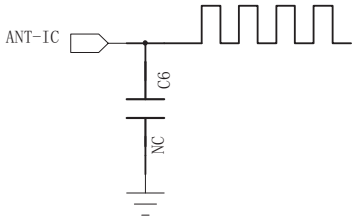
ANT-IC
C6
NC

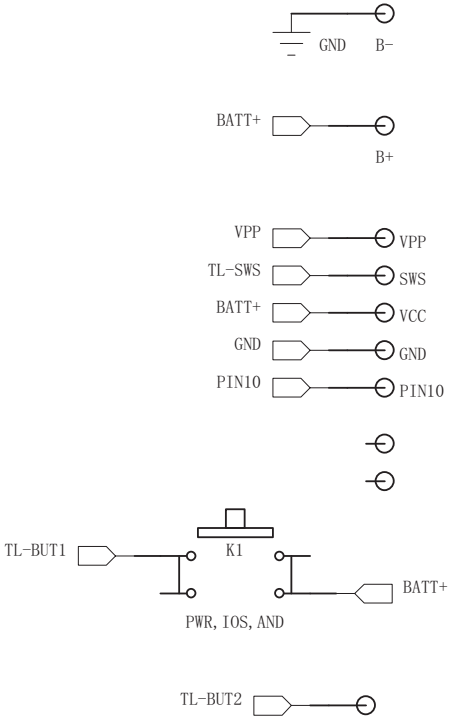
GND
B-
BATT+
B+
VPP
VPP
TL-SWS
SWS
BATT+
VCC
GND
GND
PIN10
PIN10
TL-BUT1
K1
BATT+
PWR, IOS, AND
TL-BUT2

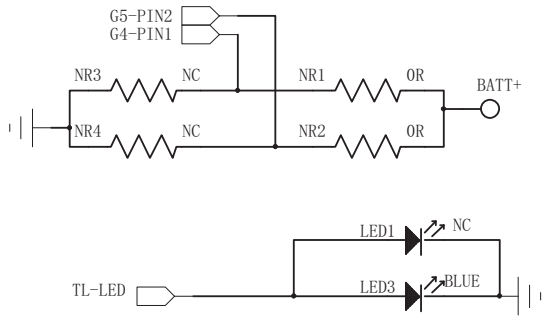
G5-PIN2
G4-PIN1
NR3
NC
NR1
0R
BATT+
NR4
NC
NR2
0R
LED1
NC
TL-LED
LED3
BLUE

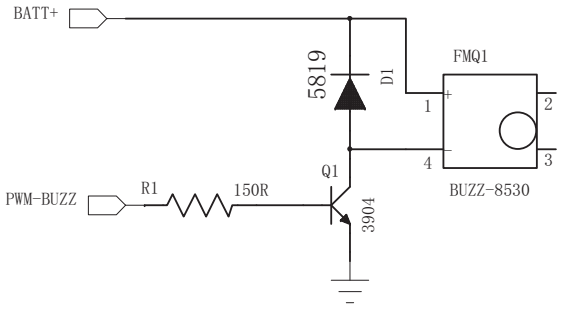
BATT+
5819
D1
FMQ1
1
2
3
4
Q1
3904
PWM-BUZZ
R1
150R
BUZZ-8530