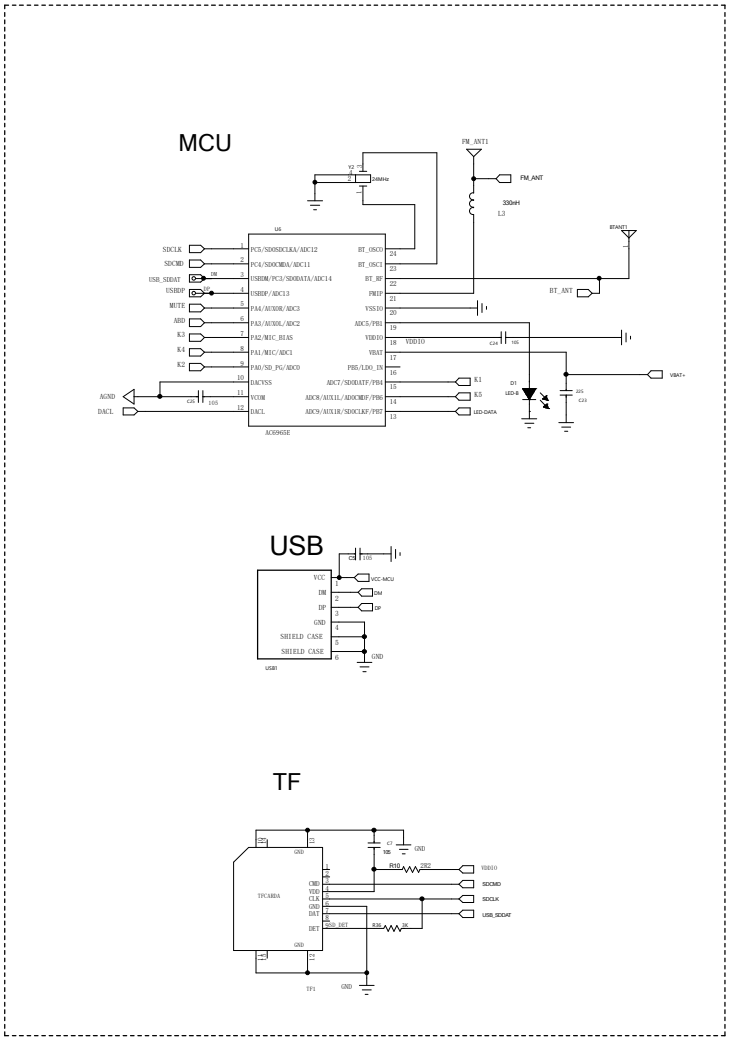
MCU
USB
TF

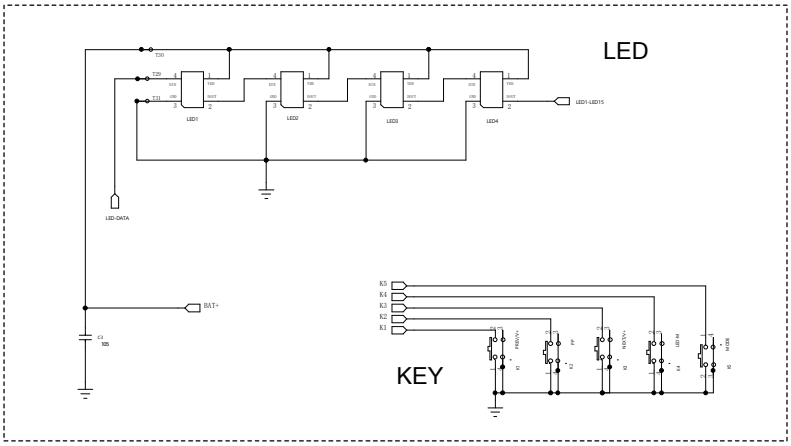
LED
KEY

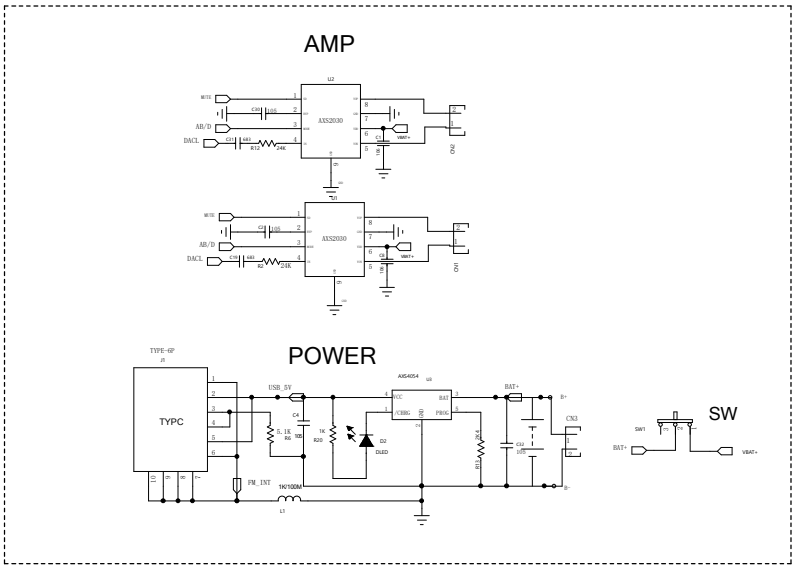
AMP
POWER
SW