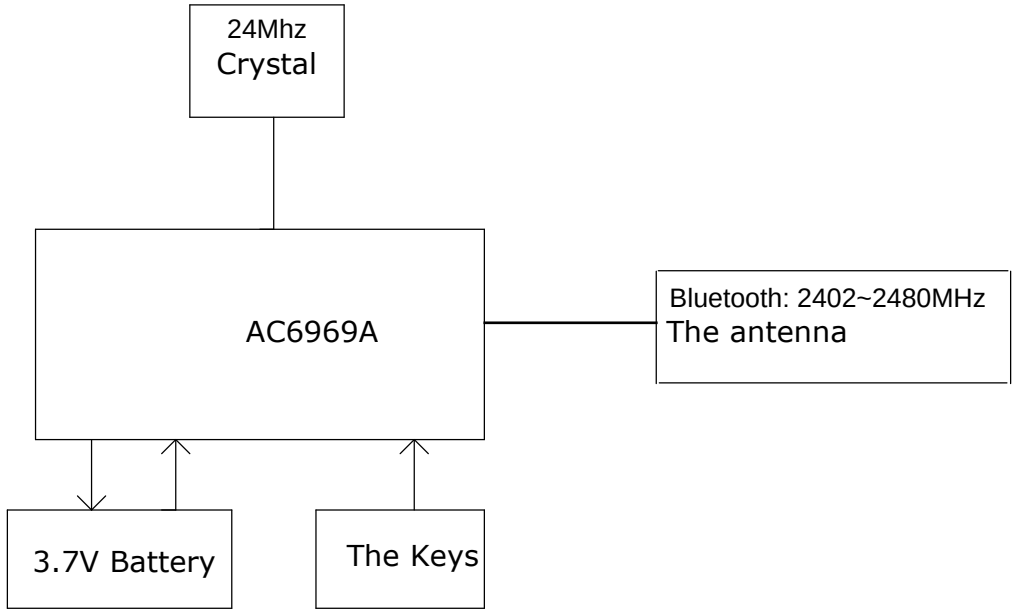
24Mhz
Crystal
AC6969A
Bluetooth: 2402~2480MHz
The antenna
3.7V Battery
The Keys