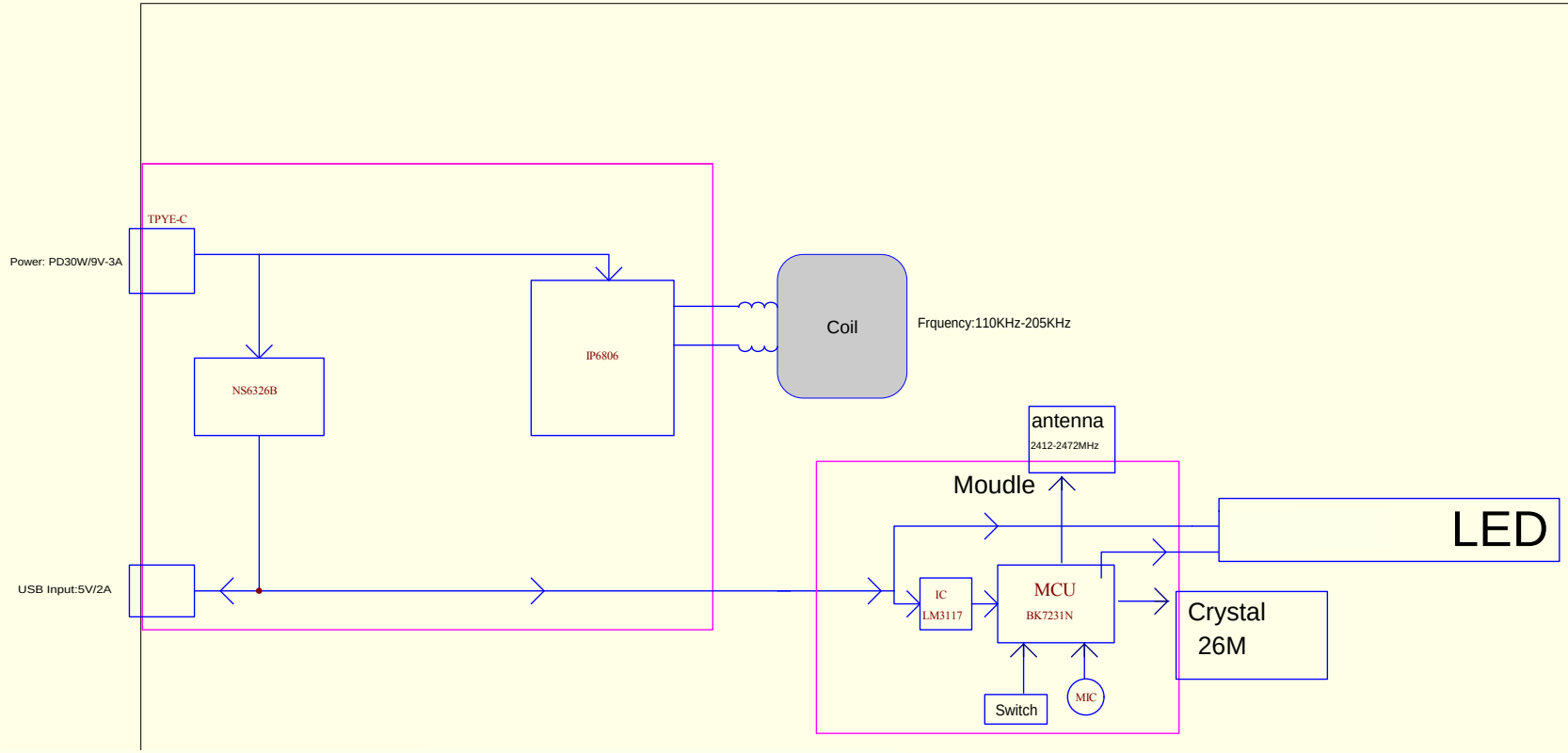
TPYE-C
Power: PD30W/9V-3A
NS6326B
IP6806
Coil
Frquency:110KHz-205KHz
antenna
2412-2472MHz
Moudle
LED
USB Input:5V/2A
IC
LM3117
MCU
BK7231N
Crystal
26M
Switch
MIC

方框