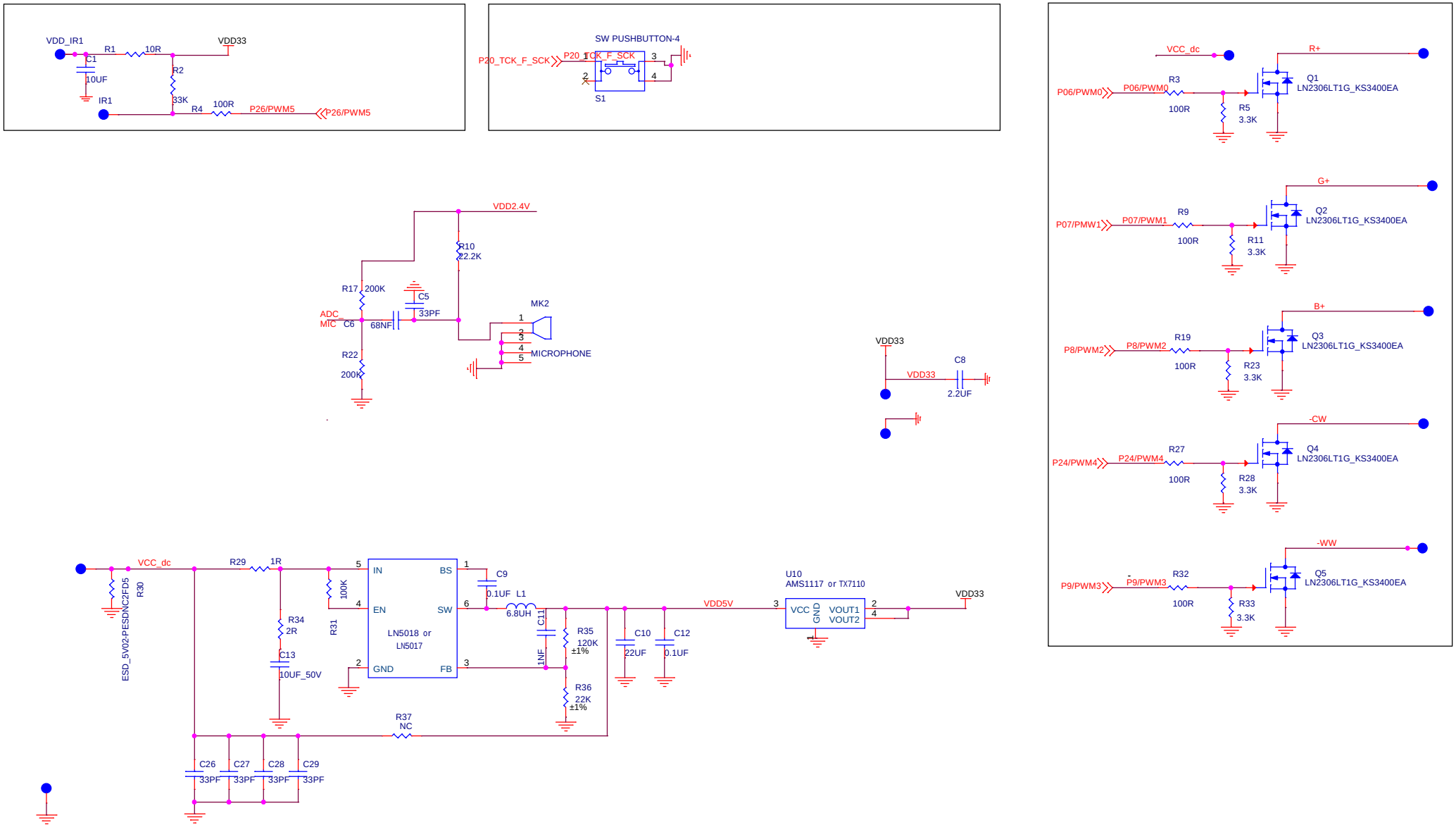
VDD_IR1
R1
10R
VDD33
C1
10UF
R2
33K
IR1
R4
100R
P26/PWM5
P26/PWM5
SW PUSHBUTTON-4
P20_TCK_F_SCK
P20_TCK_F_SCK
S1
VDD2.4V
R10
22.2K
R17
200K
C5
33PF
ADC_
MIC
C6
68NF
MK2
MICROPHONE
R22
200K
VDD33
VDD33
C8
2.2UF
VCC_dc
R+
P06/PWM0
P06/PWM0
R3
100R
R5
3.3K
Q1
LN2306LT1G_KS3400EA
G+
P07/PMW1
P07/PWM1
R9
100R
R11
3.3K
Q2
LN2306LT1G_KS3400EA
B+
P8/PWM2
P8/PWM2
R19
100R
R23
3.3K
Q3
LN2306LT1G_KS3400EA
-CW
P24/PWM4
P24/PWM4
R27
100R
R28
3.3K
Q4
LN2306LT1G_KS3400EA
-WW
P9/PWM3
P9/PWM3
R32
100R
R33
3.3K
Q5
LN2306LT1G_KS3400EA
VCC_dc
R29
1R
R30
ESD_5V02-PESDNC2FD5
R34
2R
C13
10UF_50V
R31
100K
IN
BS
EN
SW
GND
FB
LN5018 or
LN5017
C9
0.1UF
L1
6.8UH
C11
1NF
R35
120K
±1%
R36
22K
±1%
VDD5V
C10
22UF
C12
0.1UF
U10
AMS1117 or TX7110
VCC
GND
VOUT1
VOUT2
VDD33
R37
NC
C26
33PF
C27
33PF
C28
33PF
C29
33PF

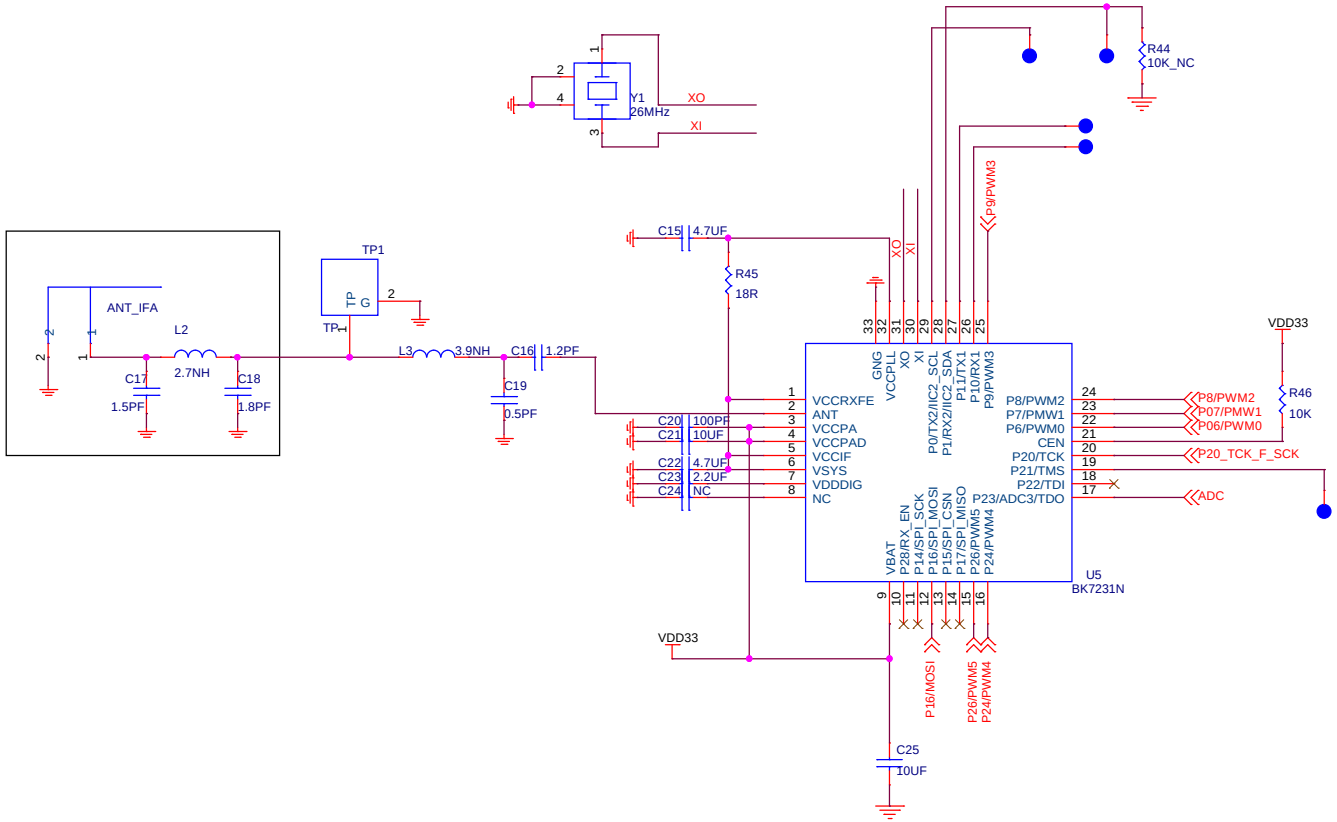


| | | |
|---|---|---|
| Title | <Title> | |
| Size B | Document Number <Doc> | Rev <RevCode> |
| Date: Wednesday, July 21, 2021 | Sheet | |