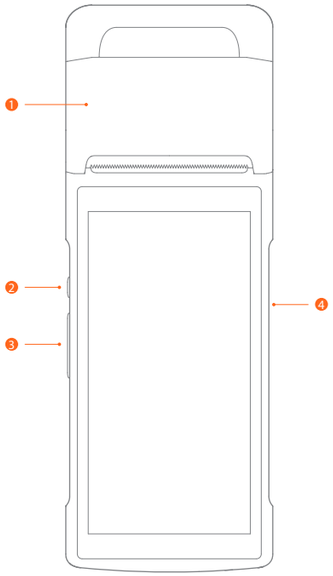

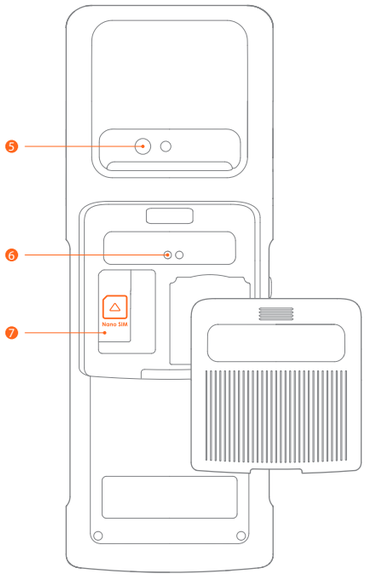

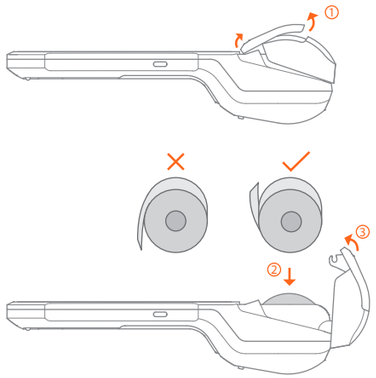

快速入门指南

❶ 打印机
用于开机状态下打印单据。

❷ 电源键
短按：点亮屏幕，锁定屏幕。
长按：关机状态下，长按 2–3 秒开机；
使用状态下，长按 2–3 秒，可选择关机或重启；
死机状态下，长按 11 秒，自动重启。

❸ 音量键
调节音量大小。

❹ Type–C接口
可用于给设备充电和开发者调试使用。

❺ 摄像头
用于支付扫码，支持一维与二维码。

❻ 扩展接口
用于连接底座(此配件需额外购买)。

❼ Nano SIM卡插槽
注意：插入或取出Nano SIM卡时，请务必让机器处于关机状态，若开机状态下插拔可能造成机器故障。

打印说明

本机支持 58mm 热敏打印纸，规格为 57±0.5mm×Ø50mm
·请通过开盖提手开启打印纸仓(图示①)，勿强行打开纸仓，防止打印头齿轮磨损；
·按照图示方向，将打印纸正确放入纸仓，并拉出部分纸至切刀外(图示 ②)；
·盖好纸仓盖，打印纸安装完成(图示③)。
注意：如果打印内容空白，请检查纸卷方向是否放反。

系统预置软件列表

· 应用市场 · 推送服务 · 用户反馈 · 数据服务 · 启动器 · 硬件管家
· 功能键自定义 · BaseService · 定制服务(壁纸、开机动画)
· 开发者指南(调试小助手) · 使用指南 · 开机指导 · 远程协助 · OTA

以上软件详细信息查询方法：选择“设置–>应用”，选择相应软件名称进行查看信息；
软件卸载方法：选择“设置–>应用–>管理应用–>卸载”卸载应用。或长按图标，拖曳到垃圾桶卸载。

注意事项

安全警告
· 请将交流电插头插入与配件电源适配器上标识输入相对应的交流电插座中；
· 此为A级产品。在生活环境中，该产品可能会造成无线电干扰。在这种情况下，可能需要用户对于干扰采取切实可行的措施。
· 仅使用本机自带电池；
· 存在爆炸性气体时请勿更换电池；
· 请勿在危险场所充电。

重要安全说明
· 避免在雷电期间安装或使用，否则有被雷电电击的危险；
· 当您发现有异常气味，过热或烟雾情形下，请立刻切断电源；
· 撕纸刀较锋利，请勿触碰！

建议
· 不要在极端冷、热环境中使用，例如靠近火源或点燃的香烟；
· 不要摔、投掷或弯折；
· 尽量在清洁无尘环境中使用，避免细小物品落入终端中；
· 在未获允许的情况下，不要在医疗设备附近使用。

声明
本公司不对以下行为负责
· 不在本指南说明的条件下使用和维护所造成的损坏；
· 对于因选件或耗材(非本公司提供之最初产品或认可产品)造成的损坏或问题；(未经本公司同意，无权进行产品修改或变动)
· 本产品的操作系统支持官方的系统更新，如果用户刷了第三方的ROM系统或者采用破解方式修改了系统文件，可能会导致系统不稳定，以及带来安全风险和安全威胁。

免责申明
由于产品的更新，此文档的某些细节可能与产品不符，请以实物为准，此文档的解释权归本公司。保留不预先通知的情况下，修改本说明书的权利。

本产品有毒有害物质名称及含量标识表

部件名称	有毒有害物质或元素					
	铅(Pb)	汞(Hg)	镉(Cd)	六价铬(Cr(VI)	多溴联苯(PBB)	多溴二苯醚(PBDE)
电路板组件	×	○	○	○	○	○
结构件	○	○	○	○	○	○
包装件	○	○	○	○	○	○

○：表示该有毒有害物质在该部件所有均质材料中的含量均在SJ/T11363–2006规定的限量要求以下。
X：表示该有毒有害物质至少在该部件的某一均质材料中的含量超出SJ/T11363–2006规定的限量要求；但是上表中打“×”的部件，其含量超出是因为目前业界还没有成熟的可替代的技术。

对达到或超出环保使用年限的产品，应依据《电子信息产品控制管理办法》规定进行回收再利用，不应随意丢弃。

产品保修卡

产品名称：_____
产品型号：_____
产品编号：_____
购买日期：_____
保修期限：自购买之日起，我公司提供 ____ 天保修服务。

以下情况恕不提供免费保修：
· 未经允许擅自拆卸修理的产品。
· 产品条码、易碎贴破损及保修卡涂改、残缺的。
· 未按照说明书的要求操作设备所引起的故障。
· 因进水或跌落而造成的故障、划伤或破损的人为损坏。
· 因不可抗拒因素造成的故障或损坏。
· 保修期限外。

联系方式：
· 公司地址：_____
· 联系电话：_____

防爆标志:Ex ic IIB T6 Gc
防爆合格证号:CCRI 19.2121

产品合格证

产品合格证
检验合格

制造商：上海商米科技集团股份有限公司
地　址：上海市杨浦区淞沪路388号创智天地7号楼505室

料号条码

T5930_CN_EU_US_ES_02

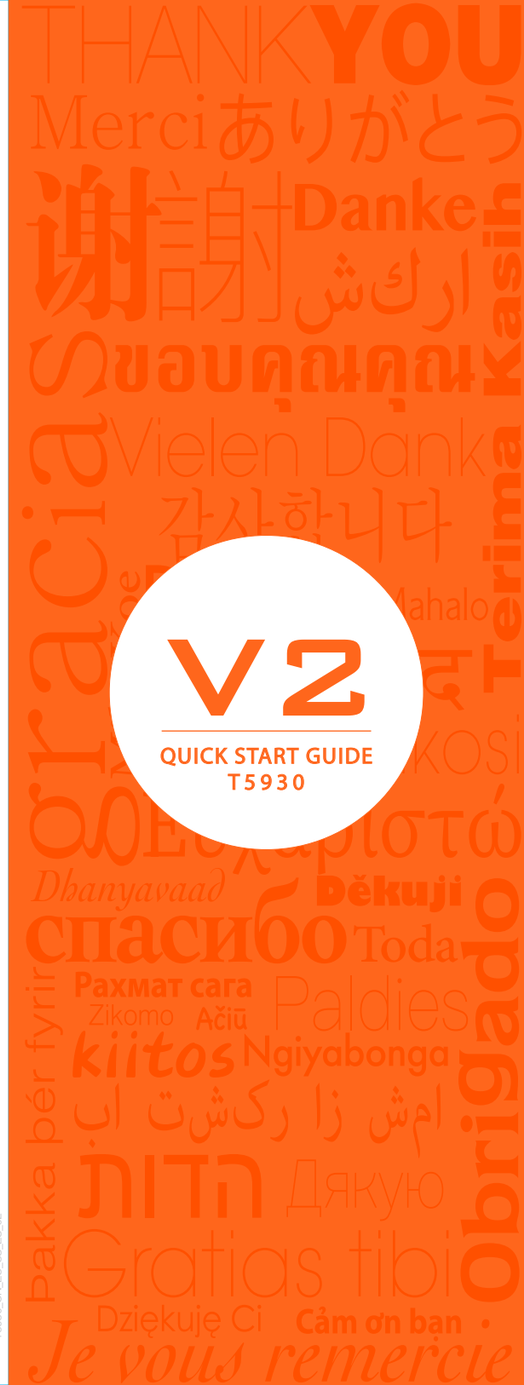

V2
QUICK START GUIDE
T5930

Quick start

❶ Printer
For printing sales slips in power on mode.

❷ Power button
Short press: wake up the screen, lock the screen.
Long press: long press for 2-3 seconds in power off mode to switch on the device.
Long press for 2-3 seconds in normal operation mode to select power off or reboot.
Long press for 11 seconds when system is frozenfor automatic reboot.

❸ Volume key
Volume adjustment.

❹ Type-C USB
For device recharging and developer debugging.

❺ Camera
For payment scanning and 1D/2D code quick scanning.

❻ Extended interface
Used to connect the base (this accessory needs to be purchased separately).

❼ SIM Card Slot
Note: To prevent system errors, please make sure the device is turned off when you insert or remove the SIM card.

Printing instructions

This device supports 58mm thermal paper with the specifications of 57±0.5mm*Ø50mm.
① Please open the paper container with the uncovering handl , Please do not force open the paper container to avoid print head gear wear;
② Feed the paper correctly into the paper container in the direction as shown, and pull some paper outside the cutter;
③ Close the cover of the paper container to finish printing paper feeding.
Note: If the printed paper is blank, please check whether the paper roll has been installed in the correct direction.

Table for Names and Content Identification of Toxic and Hazardous Substances in this Product

Part Name	Toxic or Hazardous Substances and Elements									
	Pb	Hg	Cd	Cr(VI)	PBB	PBDE	DEHP	DBP	BBP	DIBP
Circuit Board Component	×	○	○	○	○	○	○	○	○	○
Structural Component	○	○	○	○	○	○	○	○	○	○
Packaging Component	○	○	○	○	○	○	○	○	○	○

○: indicates that the content of the toxic and hazardous substance in all homogeneous materials of the component is below the limit specified in SJ/T 11363-2006.

×: indicates that the content of the toxic and hazardous substance in at least one homogeneous material of the component exceeds the limit stipulated in SJ/T 11363-2006. However, as for the reason, because there is no mature and replaceable technology in the industry at present.

The products that have reached or exceeded environmental protection service life should be recycled and reused according to the Regulations on Control and Management of Electronic Information Products, and should not be discarded randomly.

Notices

Safety Warning

Connect the AC plug to the AC socket corresponding to the marked input of the power adapter;
To avoid injury, unauthorized persons shall not open the power adapter;
This is a Class A product. This product may cause radio interference in living environments.
In that case, the user may be required to take adequate measures against interference.
Battery replacement:
1.Explosion danger may arise if replacing with the wrong battery!
2.The replaced battery shall be disposed of by maintenance personnel, and please do not throw it into fire!

Significant Safety Instructions

Do not install or use the device during lightning storms to avoid the potential risks of lightning shock;
Please turn off the power immediately if you notice abnormal odor, heat or smoke;
The paper cutter is sharp, please do not touch!

Suggestions

· Do not use the terminal near water or moisture to prevent liquid from falling into the terminal;
Do not use the terminal in extremely cold or hot environments, such as near flames or lit cigarettes;
Do not drop, throw or bend the device;
Use the terminal in a clean and dust-free environment if possible to prevent small items from falling into the terminal;
Please do not use the terminal near medical equipment without permission.

Statements

The Company does not assume responsibilities for the following actions:
Damages caused by use and maintenance without complying with the conditions specified in this guide;
The Company will not assume any responsibilities for the damages or problemscaused by optional items or consumables (rather than the initial products or approvedproducts of the Company). The customer is not entitled to change or modify the product without our consent.
The product's operating system supports official systemupdates, but if you change the operating system into a third party ROM system or alter the system files by system cracking, it may cause system instability and security risks and threats.

Disclaimer

As a result of product upgrading, some details in this document may not match the product, and the actual product shall govern. The Company reserves the right of interpretation of this document. The Company also reserves the right toalter this specification without prior notice.

Descripción del Producto

❶ Impresora
Se utiliza para imprimir documentos cuando esté encendido.

❷ Botón de encendido
Pulse brevemente: Para encender y bloquear la pantalla. Pulse prolongada- mente:
Cuando esté apagado, pulse prolongadamente durante 2-3 segundos para encender;
Durante su uso, mantenga pulsado durante 2-3 segundos, para apagar o reiniciar el aparato;
En estado muerto, pulse durante 11 segundos y se reiniciará automáticamente.

❸ Botón de volumen
Ajuste el nivel del volumen

❹ Puerto Tipo-C
Se puede utilizar para cargar el dispositivo y para depurar desarrolladores.

❺ Cámara
Puede tomar fotos y escaneo rápido de los códigos de barras 1D/2D.

Extensible Interface
❻ Para conectar la base (este accesorio necesita ser adquirido por separado).

Ranura para tarjeta SIM
❼ Nota: Cuando inserte o extraiga la tarjeta Nano SIM, asegúrese de dejar el aparato apagado, ya que al enchufar y desenchufar en el estado de encendido podría causar un fallo en el aparato.

Instrucciones para imprimir

Este aparato se puede usar papel térmico de 58mm, especifica- ciones: 57±0.5mm×Ø50mm
Abra el compartimiento del papel de la impresora (ilustrado en la figura1) no lo abra con fuerza para evitar el desgaste de la rueda dentada de la impresora; Coloque el papel en el compartimiento del papel correctamente siguiendo la dirección indicada en la figura y extraiga una parte del papel fuera del cuchillo (Ilustrado en la figura2);
Cierre la tapa del compartimiento de papel para terminar de instalar (ilustrado en la figura3).
Nota: Si el contenido impreso está en blanco, compruebe que la orientación del rollo de papel está o no invertido.

CE certification information (SAR)
This device was tested for typical body-worn operations with the back of the handset kept 5mm away. To maintain compliance with RF exposure requirements, use accessories that maintain a 5mm separation distance between the user's body and the back of the handset. The use of belt clips, holsters and similar accessories should not contain metallic components in its assembly. The use of accessories that do not satisfy these requirements may not comply with RF exposure requirements, and should be avoided.
If you are using pacemaker, hearing aid, cochlear implant or other device, please use the phone according to the doctor's advice.

PRODUCT SAFETY WARNINGS
Use responsibly. Read all instructions and safety information before use to avoid injury.The limit operating ambient temperature of the equipment declared by the manufacturer is -15~55℃

Battery safety
Charge battery only at ambient temperatures ranging from 40°C.
(1) CAUTION: Danger of explosion if battery is incorrectly replaced. Replace only with the same or equivalent type of battery recommended by the manufacturer. Dispose of used batteries according to battery manufacturer's instructions.
(2) CAUTION: RISK OF EXPLOSION IF BATTERY IS REPLACED BY AN INCORRECT TYPE. DISPOSE OF USED BATTERIES ACCORDING TO THE INSTRUCTIONS.
(3) CAUTION:Battery charging temperature upper limit is 40°C.

Adapter safety
When charging, please place the device in an environment that has a normal room temperature and good ventilation. It is recommended to charge the device in an environment with a temperature that ranges from 0°C~40°C.
For altitude 2km below use only

Wi-Fi Safety
Turn Wi-Fi off in areas where Wi-Fi use is prohibited or when it may cause interference or danger, such as in airplanes while flying.

Declaration of Conformity

CE

BE	BG	CZ	DK
DE	EE	IE	EL
ES	FR	HR	IT
CY	LV	LT	LU
HU	MT	NL	AT
PL	PT	RO	SI
SK	FI	SE	UK

Hereby, Shanghai Sunmi Technology Co., Ltd. declares that the Wireless data POS System(Model No.:T5930) is in compliance with the essential requirements and other relevant provisions of RED 2014/53/EU.

CAUTION: The device is restricted to indoor use when operated in the European Community using frequency in 5150MHz~5250MHz to reduce the potential for interference.

5.8G SRD receiver category：1

Technical features and characteristic

	Operation Frequency	Transmitted
GSM 900	880.0–915.0MHz(TX), 925.0–960.0MHz(RX)	32.5dBm
GSM 1800	1710.0–1785.0MHz (TX), 1805.0–1880.0 MHz (RX)	29.5dBm
WCDMA Band I	1920-1980MHz (TX), 2110-2170MHz (RX)	21dBm
WCDMA Band VIII	880-915MHz (TX), 925-960MHz (RX)	22.5dBm
LTE BAND 1	1920-1980MHz (TX), 2110-2170MHz (RX)	22.5dBm
LTE BAND 3	1710-1785 MHz (TX), 1805-1880MHz (RX)	23dBm
LTE BAND 7	2500-2570MHz(TX), 2620-2690MHz(RX)	23dBm
LTE BAND 8	880-915MHz(TX) , 925-960MHz(RX)	23dBm
LTE BAND 20	832-862MHz(TX),791-821MHz(RX)	22.5dBm
LTE BAND 38	2570-2620MHz (TX/RX)	21.5dBm
LTE BAND 40	2300-2400MHz (TX/RX)	22dBm
BT/BLE	2402MHz-2480MHz	7dBm
2.4G Wi-Fi	2412MHz-2472MHz	15dBm
5G Wi-Fi	5.15-5.35GHz	16.5dBm
5G Wi-Fi	5.725-5.850GHz	13.5dBm

This device complies with Part 15 of the FCC Rules.

Operation is subject to the following two conditions:
(1) This device may not cause harmful interference.
(2) This device must accept any interference received, including interference that may cause undesired operation.
FCC ID: 2AH25V2
NOTE: Changes or modifications not expressly approved by the party responsible for compliance could void the user's authority to operate the equipment.
NOTE: This equipment has been tested and found to comply with the limits for a Class B digital device, pursuant to Part 15 of the FCC Rules. These limits are designed to provide reasonable protection against harmful interference in a residential installation. This equipment generates uses and can radiate radio frequency energy and, if not installed and used in accordance with the instructions, may cause harmful interference to radio communications. However, there is no guarantee that interference will not occur in a particular installation.
If this equipment does cause harmful interference to radio or television reception, which can be determined by turning the equipment off and on, the user is encouraged to try to correct the interference by one or more of the following measures:
---Reorient or relocate the receiving antenna.
---Increase the separation between the equipment and receiver.
---Connect the equipment into an outlet on a circuit different from that to which the receiver is connected.
---Consult the dealer or an experienced radio/TV technician for help.
Body-worn Operation
This device was tested for typical body-worn operations. To comply With RF exposure requirements, a minimum separation distance of 1.0cm must be maintained between the user's body and the handset, including the antenna.
Third-party belt-clips, holsters, and similar including the antenna. Third-party belt-clips, holsters, and similar accessories used by this device should not contain any metallic components. Body-worn accessories that do not meet these requirements may not comply with RF exposure requirements and should be avoided.

Specific Absorption Rate (SAR) information:
This wireless data POS System meets the government's requirements for exposure to radio waves. The guidelines are based on standards that were developed by independent scientific organizations through periodic and thorough evaluation of scientific studies. The standards include a substantial safety margin designed to assure the safety of all persons regardless of age or health.
FCC RF Exposure Information and Statement. The SAR limit of USA (FCC) is 1.6W/kg averaged over one gram of tissue.
Device types: T5930 has also been tested against this SAR limit. The highest SAR value reported under this standard during product certification when properly worn on the body is 1.042W/kg（10gSAR，test distance：0mm，limit 4W/kg）and 0.983W/kg (1gSAR，test distance：5mm，limit 1.6W/kg). This device was tested for body-worn operations with the back of the handset kept 10mm and 5mm from the body. To maintain compliance with FCC RF exposure requirements, use accessories that maintain a 10mm and 5mm separation distance between the user's body and the back of the handset. The use of belt clips, holsters and similar accessories should not contain metallic components in its assembly. The use of accessories that do not satisfy these requirements may not comply with FCC RF exposure requirements, and should be avoided.

Technical features and characteristic

	Operation Frequency	Transmitted
GSM 850	824-849 MHz(Tx),869-894 MHz(Rx)	32 dBm
GSM 1900	1850-1910 MHz(Tx),1930-1990 MHz(Rx)	30 dBm
WCDMA BAND II	1850-1910 MHz(Tx),1930-1990 MHz(Rx)	23 dBm
WCDMA BAND IV	1710 -1755 MHz(Tx),2110 - 2155MHz(Rx)	23 dBm
WCDMA BAND V	824-849 MHz(Tx),869-894 MHz(Rx)	23.5 dBm
LTE BAND 2	1850-1910 MHz(Tx),1930-1990 MHz(Rx)	22.5 dBm
LTE BAND 4	1710-1755 MHz(Tx),2110-2155 MHz(Rx)	22.5 dBm
LTE BAND 7	2500-2570 MHz(Tx),2620-2690 MHz(Rx)	22.5 dBm
LTE BAND 17	704-716 MHz(Tx),734-746 MHz(Rx)	23 dBm
2.4G Wi-Fi	2412-2462 MHz	15 dBm
Bluetooth	2402-2480 MHz	6 dBm
BLE	2402-2480 MHz	6 dBm
5G Wi-Fi	5150-5250 MHz	17 dBm
5G Wi-Fi	5725-5850 MHz	16.5 dBm

Manufacture
Shanghai Sunmi Technology Co., Ltd.
Room 505, KIC Plaza, No.388 Song Hu Road, Yang Pu District, Shanghai, China