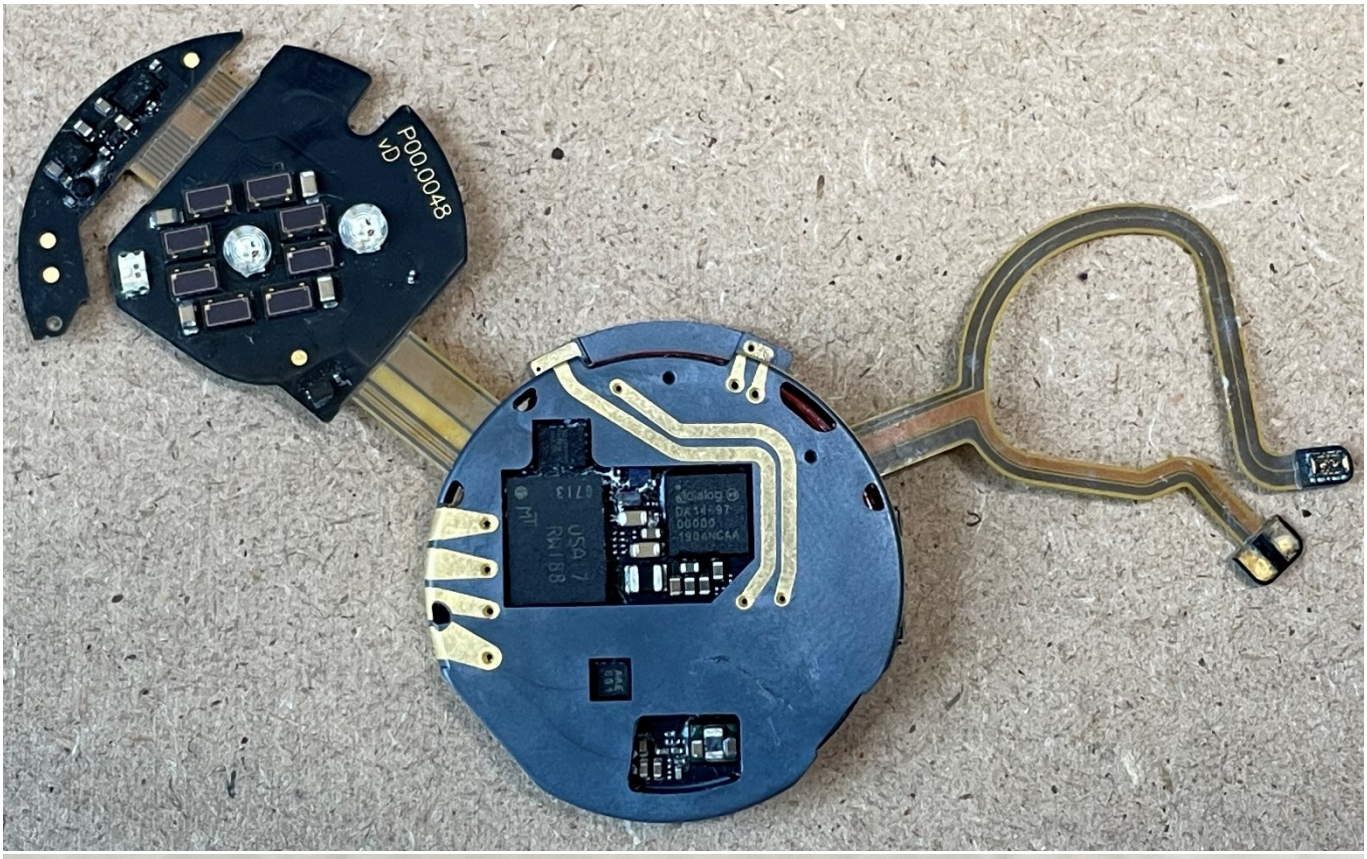
P00.0048
VD
Dialog
DA14697
00000
1906NCAA
OSA17
RW188
MT
6713

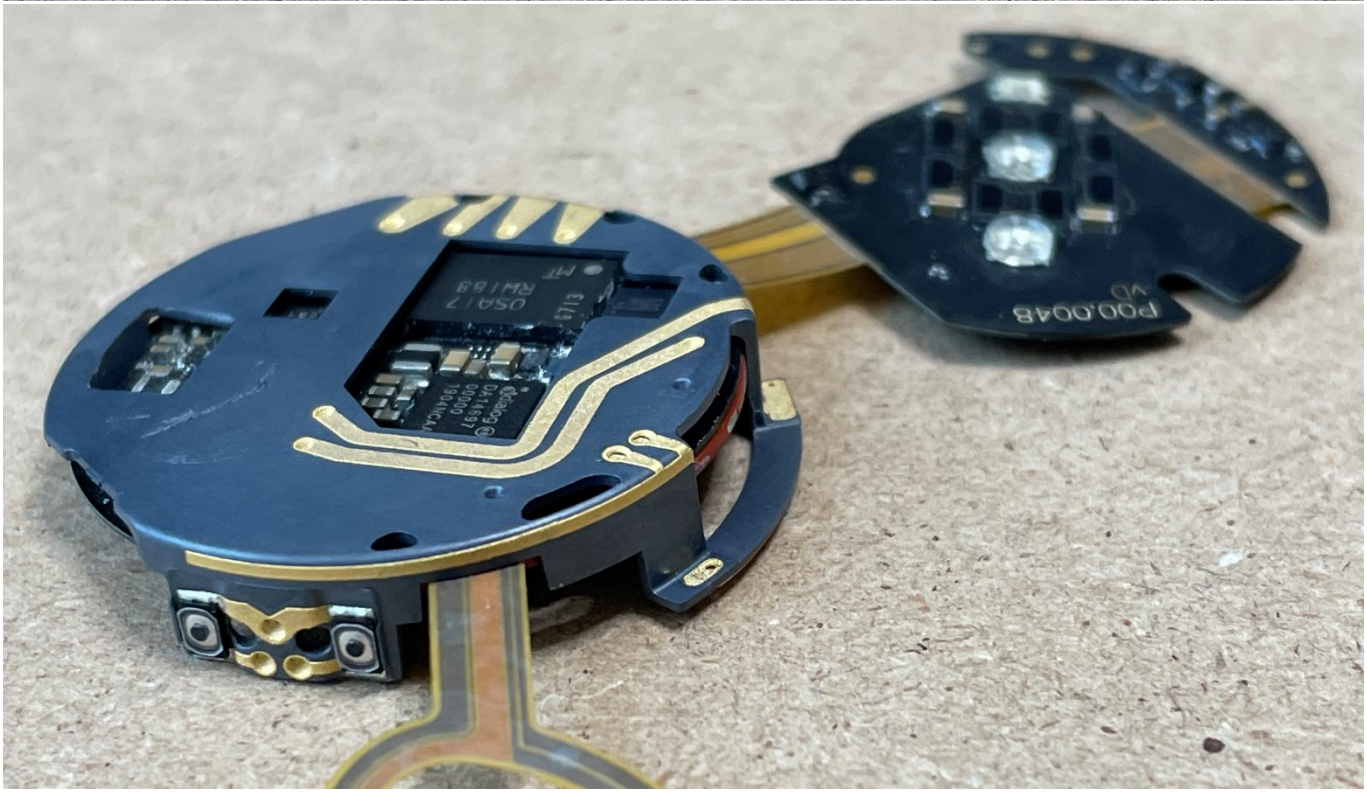
P00.0048
VD
OSA17
RW188
MT

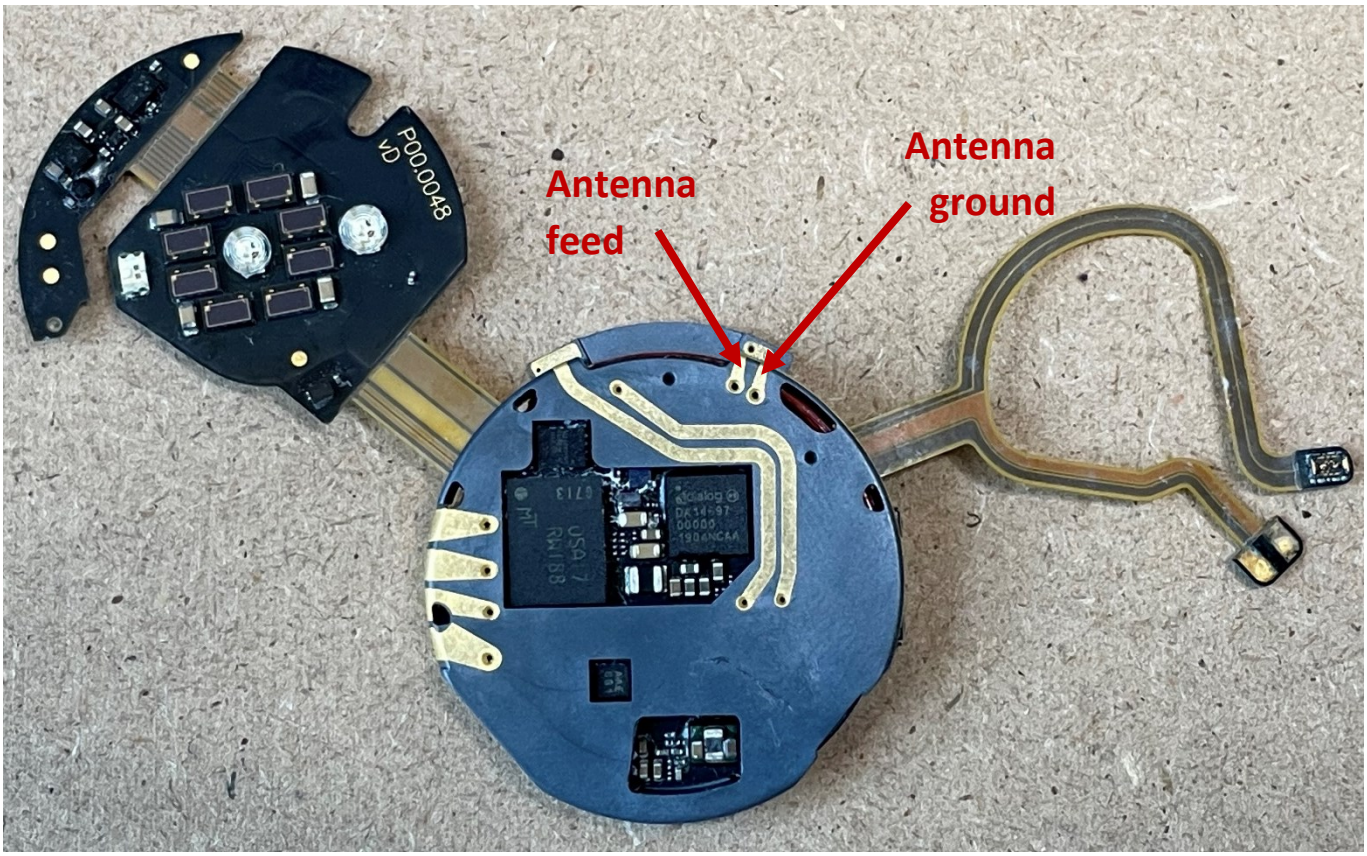
Antenna
feed
Antenna
ground
P00.0048
VD

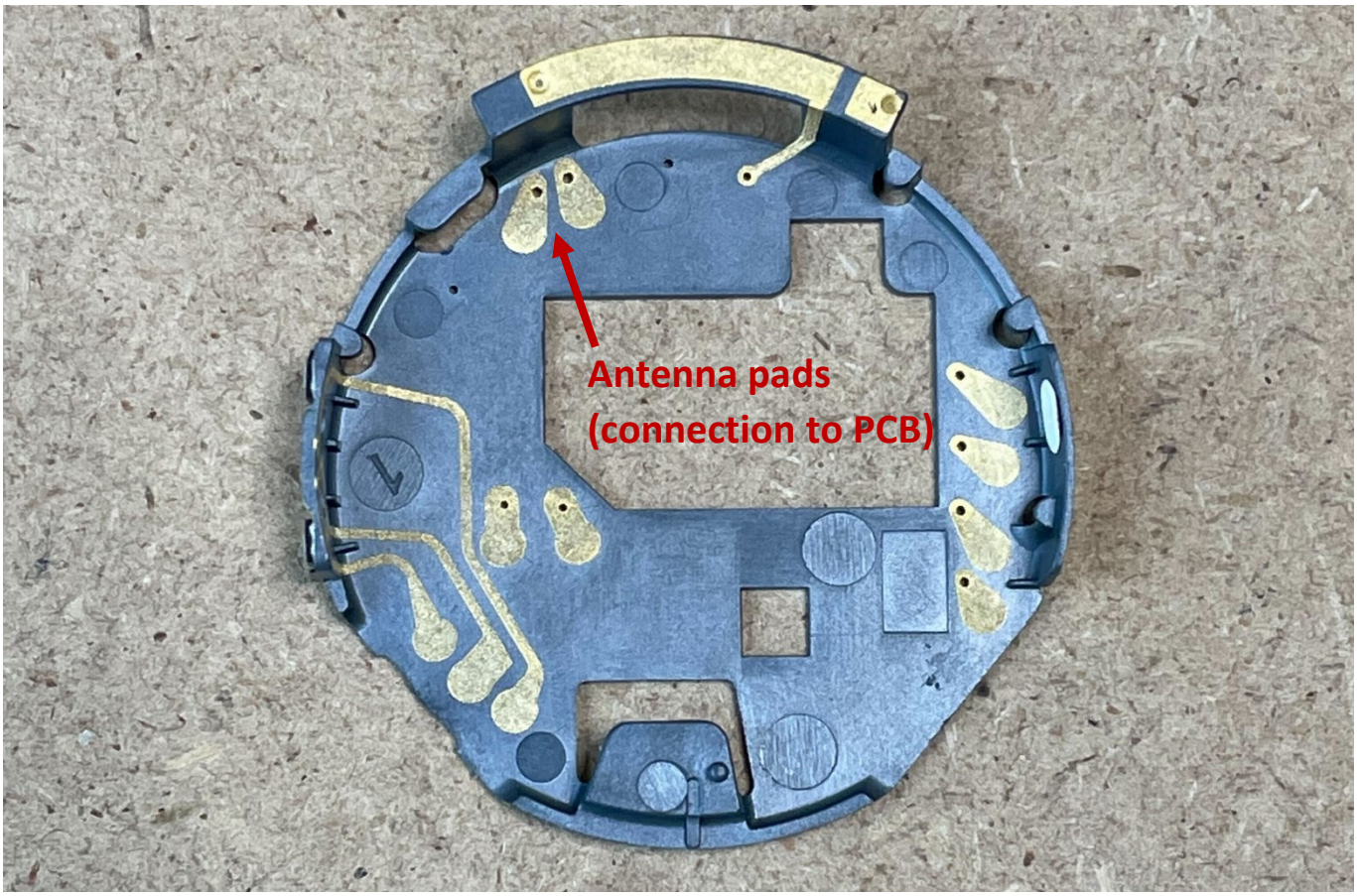
Antenna pads
(connection to PCB)