Label & Label Location

Model: PB-711-B

WLAN label stick on bottom cover outside

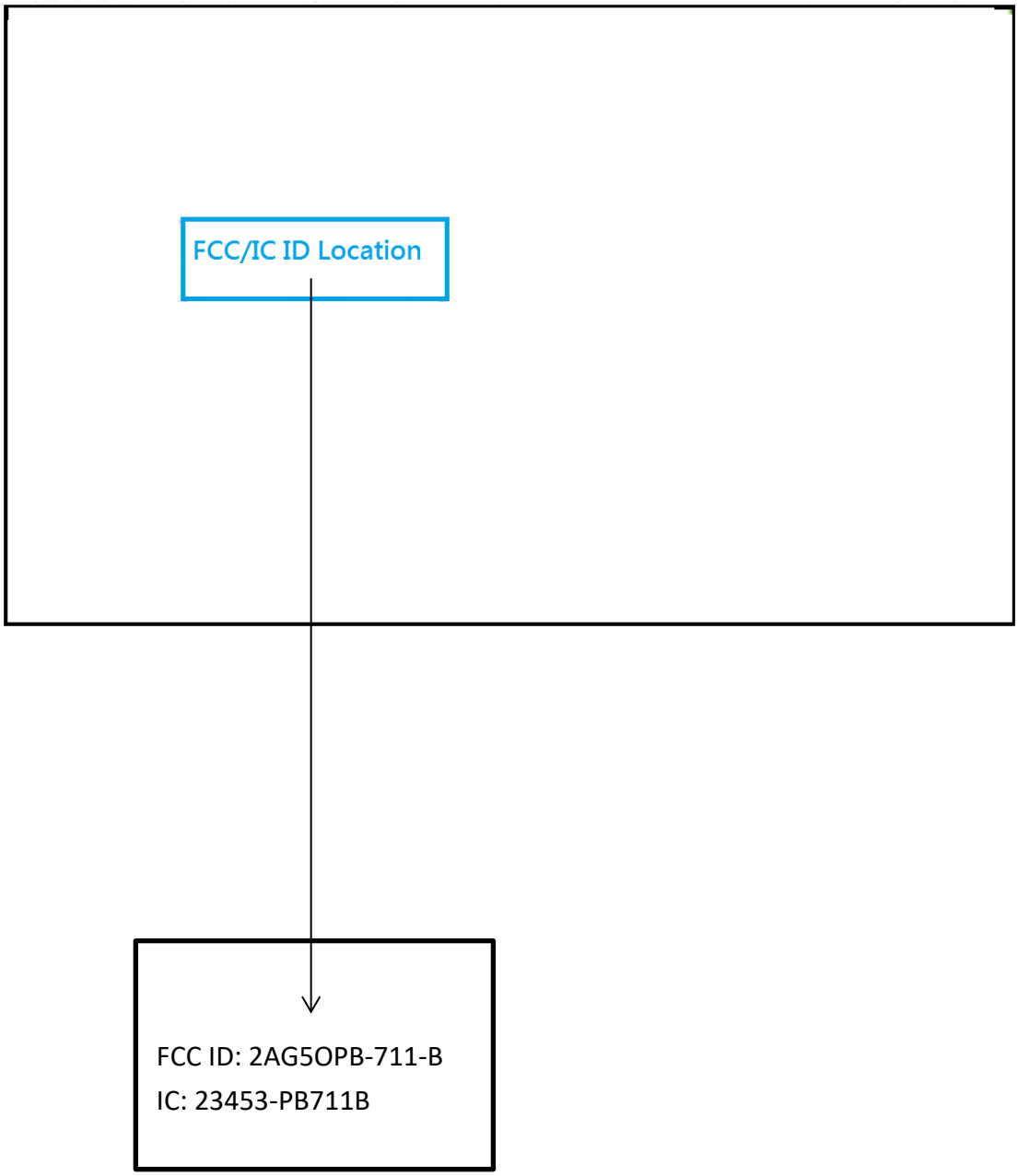

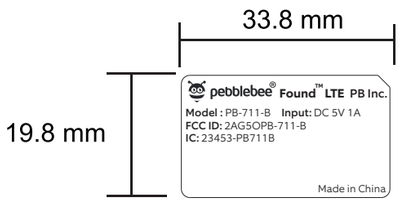

工廠打印條碼

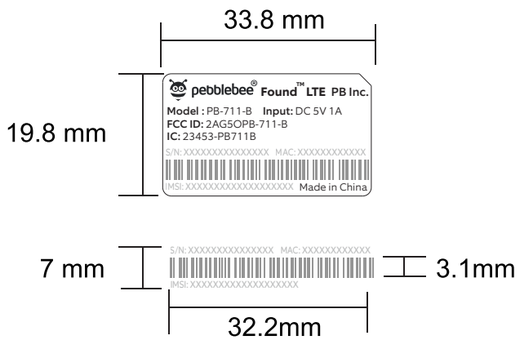

Note:
1. Material: AW3209/90mm +A708 25#PET可打字光膜/85
2. The Manufacturing process of handling of this material may require special health and/or safety precaution.
3. According to Official journal of EU releases RoHS (2002/95/CE). Abate/ Reduce Hazardous Substance in Components

DIMENSION TOLERANCE				HOLE : ±0.05 ANGLES : ±0.5°
RANGE	A( )	B( )	C( )	EXTRA
0 - 10	±0.05	±0.1	±0.2	
10 -50	±0.10	±0.15	±0.5	
50 -100	±0.15	±0.2	±1.0	
100 -	±0.2	±0.25	±2.0	

	DESCRIPTION				ZONE	REV	DATE
NOTE	Device label,AW320+打字光膜,33.8*19.8mm, Pebblebee GO				WWE	C	20211228
MODEL	Pebblebee GO	Q'TY		GT PN			
MATERIAL		DESIGNER	Jerry				
SCALE	1:1	CHECKER	Jerry	Goldtek Technology Co.,Ltd.			
UNITS	mm						