Installation and Maintenance Manual
LoRa IoT Station

This document is owned by **KLK** and can not be distributed, used and/or reproduced without **KERLINK** written authorization.

	Author	Approved by	Validated by
Name	Michel GILBERT	Ronan DUBOURG	Yannick Delibie
Entity			
Initial	MGI	RDU	YDE
Date	17/09/2015	18/09/2015	18/09/2015
Visa			

Destination List

Name	Company / Service	Place	Commentry

Document history

Version	Modification	Author	Date
V0.1	Preliminary version	LLO	27/01/2014
V0.2	Adding of some precisions on the following contents: • Internet cabling and cable type • Cable gland dimensions • Auxiliary power supply • GPS and GSM considerations	SNI	06/05/2014
V0.3	Safety recommendations adding	SNI	02/06/2014
V0.4	Safety recommendations adding	SNI	30/06/2014
V0.5	Safety recommendations adding	SNI	23/07/2014
V0.6	Recommended additional lightning protections	SNI	29/09/2014
V1.0	New mounting kit	SNI	08/04/2015
V2.0	Added specific parts for LoRa IOT stations 915 and 923	MGI	17/09/2015

This document is owned by **KLK** and can not be distributed, used and/or reproduced without **KERLINK** written authorization.

Contents

1 OPEN ISSUES 6

2 REFERENCES 6

3 GLOSSARY 6

4 INTRODUCTION 8

5 DESCRIPTION OF THE LORA IOT STATION 9

5.1 BLOCK DIAGRAM 9
5.2 TECHNICAL SPECIFICATIONS 10
5.2.1 LoRa IOT Station 868 10
5.2.2 LoRa IOT Station 915 13
5.2.3 LoRa IOT Station 923 16
5.3 MECHANICAL IMPLEMENTATION 18
5.4 STICKERS 21

6 REGULATIONS 22

6.1 LORA IOT STATION 868 22
6.2 LORA IOT STATION 915 23
6.2.1 FCC 23
6.2.2 IC 24
6.3 LORA IOT STATION 923 25

7 INSTALLATION PROCEDURE 26

7.1 INSTALLATION TOPOLOGY 26
7.1.1 Single station installation 26
7.1.2 Multi-station installation 27
7.1.2.1 With SIM Subscription 27
7.1.2.2 Without SIM Subscription 28
7.2 ELECTRIC DISTRIBUTION TO THE LORA IOT STATION 29
7.2.1 Safety standard 29
7.2.2 Power-Over-Ethernet (POE) power supply 29
7.2.3 Solar power supply 30
7.3 MOUNTING OF THE ENCLOSURE 31
7.3.1 GPS and GSM considerations 31
7.3.2 General considerations 31
7.3.3 Position of the universal antenna support vs. the enclosure 32
7.3.4 Pole mounting by U-bolt 33
7.3.5 Wall mounting 34
7.3.6 Metallic strapping mounting 35
7.3.7 Key parameters to optimise the radio performance 36
7.3.7.1 Height of the site 36
7.3.7.2 Propagation model vs area type 37
7.3.7.3 Co-localization with GSM/UMTS/LTE transmitters 38
7.3.7.3.1 LoRa IoT Station 868 40
7.3.7.3.2 LoRa IoT Station 915 41
7.3.7.3.3 LoRa IoT Station 923 41

This document is owned by **KLK** and can not be distributed, used and/or reproduced without **KERLINK** written authorization.

7.3.7.4 Fresnel ellipsoid 41
7.4 SETTING CONNECTIONS 43
7.4.1 Ethernet connection *43*
7.4.2 LoRa RF Antenna connection *43*
7.5 COMMISSIONING 47
7.5.1 SIM card *47*
7.5.2 Power on *48*
7.5.3 Functional check *48*
7.6 LIGHTNING PROTECTIONS 50
7.6.1 Antenna link *50*
7.6.2 Ethernet link *50*
8 MAINTENANCE OF THE ACCESS POINT 51
8.1 SIMPLE CHECKS 51
8.1.1 LoRa IoT Station enclosure *51*
8.1.2 Cables *51*
8.1.3 LED *51*
8.2 INTERFACES FOR DEBUG OR MAINTENANCE PURPOSES 51
8.2.1 Proprietary debug interface *51*
8.2.2 USB and Ethernet interface *52*
8.2.3 TEST and RESET buttons *52*
9 KERLINK SUPPORT 52

This document is owned by **KLK** and can not be distributed, used and/or reproduced without **KERLINK** written authorization.

Figures

Figure 1: LoRa Network topology 8
Figure 2: LoRa IoT Station Block diagram 9
Figure 3 : LoRa IoT Station casing - external view 19
Figure 4 : POE injector (example) 19
Figure 5 : LoRa IoT Station casing - internal view 20
Figure 6 : Mounting kit 21
Figure 7 : Single station installation (with SIM) 26
Figure 8 : Single station installation (No SIM) 26
Figure 9 : Multi-station installation (with SIM) 27
Figure 10 : Multi-station installation (No SIM) 28
Figure 11 : Ethernet connection 29
Figure 12 : DC power supply connection (temporary image) 30
Figure 13 : Mounting kit dimensions 31
Figure 14 : Universal antenna support dimensions 32
Figure 15 : Position of the universal antenna support when mounted on the enclosure support 32
Figure 16 : Pole mount set on the enclosure 33
Figure 17 : Another view of the pole mounting using U-bolt (no pole represented) 33
Figure 18 : Wall mount of the enclosure (front side) 34
Figure 19 : Wall mount of the universal antenna support (front side) 34
Figure 20 : Pole mount set using strapping 35
Figure 21 : Pole mounting of the universal antenna support using strapping 35
Figure 22 : Urban (small city) Hata propagation model vs height of the antenna 36
Figure 23 : Rural countryside Hata propagation model vs height of the antenna 37
Figure 24 : Hata propagation model vs area configuration (Height = 12m) 38
Figure 25 : Fading effects due to obstacles 42
Figure 26 : Fresnel ellipsoid clearance 42
Figure 27 : Fresnel ellipsoid and earth curvature 43
Figure 28 : Technical antenna 868 specifications 44
Figure 29 : Technical antenna 915 specifications 44
Figure 30 : attachment of the antenna on the mounting set 45
Figure 31 : connection of LoRa RF antenna (bottom view) 45
Figure 32 : attachment of the RF antenna cable 46
Figure 33 : SIM Card 47
Figure 34 : Test and Reset buttons 48
Figure 35 : LEDs indicators 49
Figure 36 : Proprietary debug interface of the LoRa IoT Station 51
Figure 37 : USB connector of the LoRa IoT Station 52

This document is owned by KLK and can not be distributed, used and/or reproduced without KERLINK written authorization.

1 Open Issues

Reference	Status	Description
[1]		

2 References

Reference	Document/Link	Description
[1]	https://www.lora-alliance.org/For-Developers/LoRaWANDevelopers	LoRaWAN™ Specification V1.0 2015 January
[2]		
[3]		

3 Glossary

Keyword	Description
ADC	Analog to Digital Converter
AMR	Automatic Meter Reading
AP	Access Point
APC	Automated Power Control
API	Application Programming Interface
APN	Access Point Name
BTS	Base Transceiver Station
CAN	Control Area Network
CPU	Central Processing Unit
DAC	Digital to Analog Converter
DDRAM	Double Data Rate RAM
DHCP	Dynamic Host Configuration Protocol
DOTA	Download Over The Air
EIRP	Equivalent Isotropically Radiated Power
EMC	ElectroMagnetic Compatibility
FTP	File Transfer Protocol
GPRS	General Packet Radio Service
GPS	Global Positioning System
GSM	Global System for Mobile communication
HTTP	HyperText Transfer Protocol
IK	Mechanical Impact

This document is owned by KLK and can not be distributed, used and/or reproduced without KERLINK written authorization.

IO	In / Out
IoT	Internet of Things
IP	Internet Protocol or Ingress Protection
KLK	Kerlink
KNET	Kerlink M2M network
LED	Light-Emitting Diode
LoRa	Long Range
LTE	Long Term Evolution
M2M	Machine to Machine
MIPS	Millions of Instructions Per Second
NFS	Network File System
NMEA	National Marine Electronics Association
PCB	Printed Circuit Board
PoE	Power over Ethernet
PU	Polyurethane
RAM	Random Access Memory
RF	Radio Frequency
RSSI	Received Signal Strength Indicator
SAW	Surface Acoustic Wave
SI	Système d'Information
SIM	Subscriber Identity Module
SMA	SubMiniature version A
SSH	Secure Shell
TBD	To Be Defined
TCP	Transmission Control Protocol
UMTS	Universal Mobile Telecommunications System
USB	Universal Serial Bus
UV	UltraViolet
WAN	Wide Area Network
WLAN	Wireless Local Area Network
VHF	Very High Frequency

This document is owned by **KLK** and can not be distributed, used and/or reproduced without **KERLINK** written authorization.

4 Introduction

The LoRa IoT Station is part of the global Long Range Radio fix network to provide M2M connectivity link between low power end-point and Internet Access.

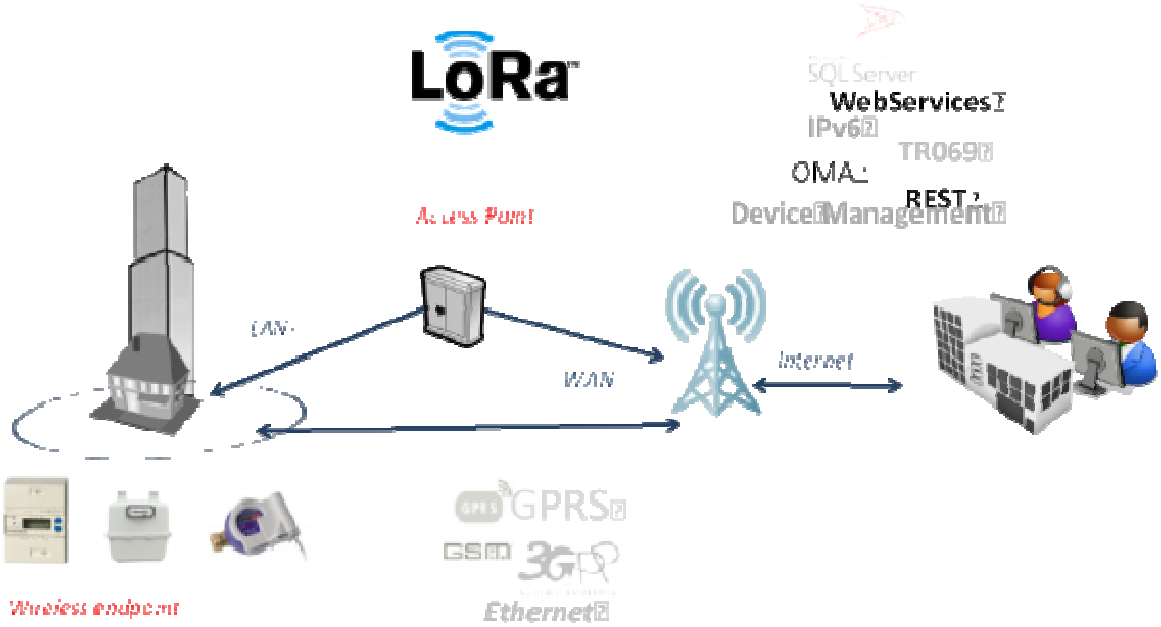

Figure 1: LoRa Network topology

The product is based on LoRa technology provided by Semtech Company.

Three different versions of LoRa IoT Stations are available to cover different countries and areas around the world:

	LoRa IoT Station 868	LoRa IoT Station 915	LoRa IoT Station 923
Geographical area	Europe Africa Middle East, India	North America Central America South America with the exception of Brazil	Asia : Indonesia, Korea, Japan, Brunei, Papua New Guinea, Singapore Oceania : Australia, New Zealand
ISM band	863 - 876 MHz	902 - 928 MHz	915 - 928 MHz
Downstream bandwidth (Tx of the LoRa IoT Station)	865 - 873MHz	902 - 928 MHz	921,5 - 928 MHz
Upstream bandwidth (Rx of the LoRa IoT Station)	863 - 873 MHz	902 - 928 MHz	915 - 925 MHz
WWAN capabilities	WCDMA dual-band: 900/2100 MHz Quad-band GSM GPRS 850/900/1800/1900MHz	WCDMA dual-band: 850/1900 MHz Quad-band GSM GPRS 850/900/1800/1900MHz	WCDMA dual-band: 900/2100 MHz Quad-band GSM GPRS 850/900/1800/1900MHz

Please check (or contact Kerlink) the appropriate version for the dedicated country.

The present document addresses all the above LoRa IoT Station versions.

This document is owned by **KLK** and can not be distributed, used and/or reproduced without **KERLINK** written authorization.

5 Description of the LoRa IoT Station

5.1 Block Diagram

The following figure describes the functional architecture:

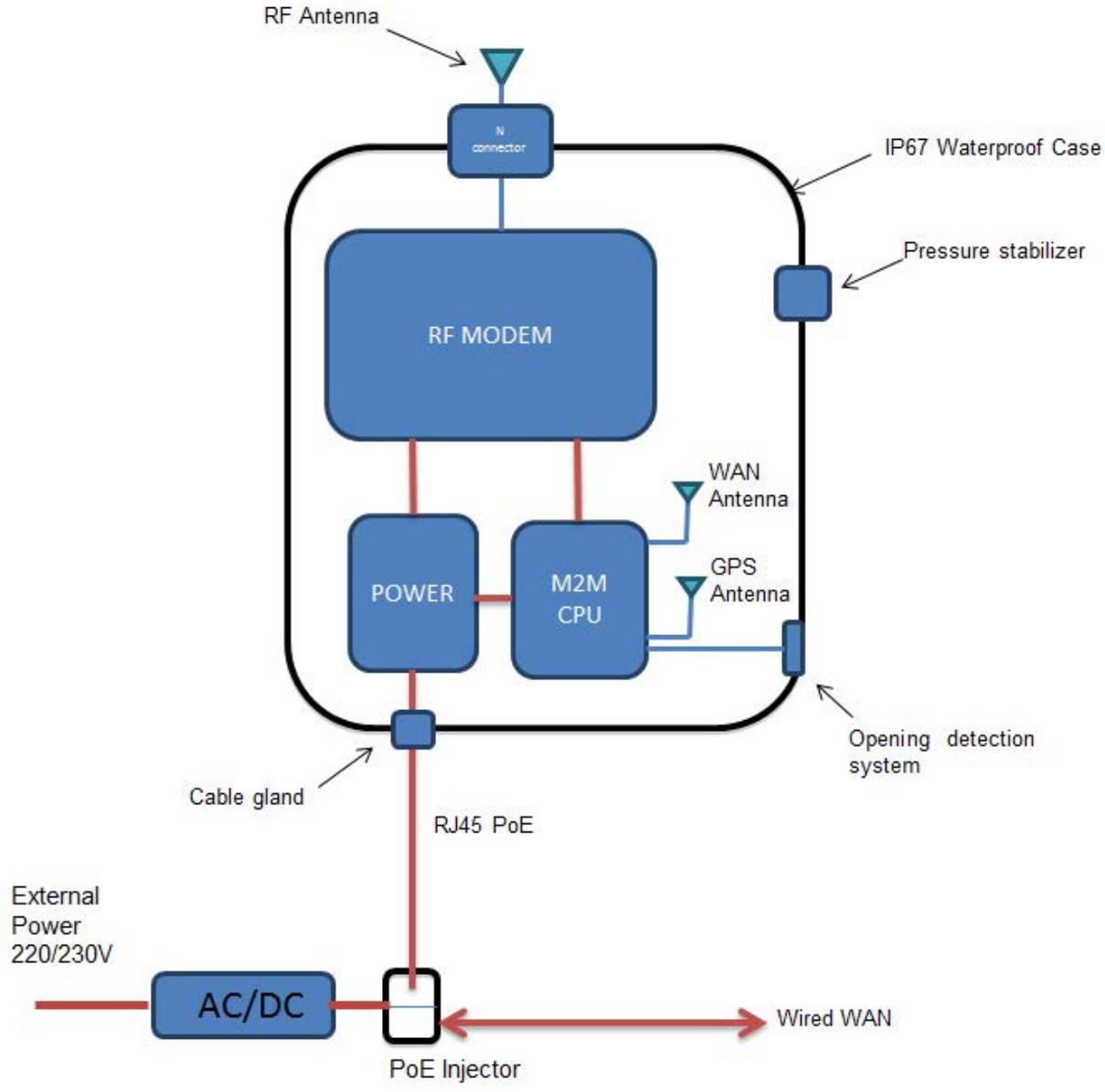

Figure 2: LoRa IoT Station Block diagram

This document is owned by KLK and can not be distributed, used and/or reproduced without KERLINK written authorization.

5.2 Technical specifications

5.2.1 LoRa IOT Station 868

Product datasheet KERLINK - LoRa IoT Station 868

kerlink communication is everything

DATASHEET

LoRa IoT Station 868

LoRa gateway for IoT chain

- 868 MHz ISM band LongRange™ bidirectional communications capabilities
- Embedded, remote and open low power communication station
- Open development framework based on standard Linux OS
- WAN connectivity over GPRS/EDGE/3G or Ethernet

1. Hardware Key Features

1.1 System

CPU:
- Based on ARM 926EJS core processor
- Up to 230 MIPS
- Real-time clock saved by battery
- Hardware watchdog
- Optimised power consumption management

Volatile memory:
- Low power DDRAM 128 MB
- 10 MB used for system firmware

Non-volatile memory:
- 128 MB NAND flash (40MB used for system firmware and autorecovery mechanism)
- 8 GB eMMC

1.2 User interfaces

Internal LEDs:
- Operational status : power, GSM signal strenght level, WAN connectivity indicator

Internal push buttons:
- Manual station reset
- Manual test or installation procedure launch

USB host interface allowing :
- Local software upgrade with simple USB key
- USB/NET local configuration/maintenance access

1.3 Communication

LongRange:
- Incorporate LoRa (TM) bidirectional communications technology (RX : 863-870MHz , TX : 868-870MHz)
- Sensitivity : up to -141 dBm
- 49 LoRa Demodulators over 9 channels
- More than 15km range in sub-urban situation
- More than 2km range in urban situation

WWAN:
- HSDPA/UMTS (900/2100MHz) : DL 3.6 Mbps / UL 384 Kbps (HSDPA), UL/DL 384Kbps (UMTS)
- GPRS/EDGE (850/900/1800/1900MHz) : UL/DL 85.6Kbps (GPRS), UL/DL 236.8Kbps (EDGE)
- IMEI inside
- Internal antenna

Ethernet :
- PowerOverEthernet IEEE 802.3af 10/100 Base T compliant

1.4 Positionning/Timing

GPS:
- Integrated GNSS high sensitivity GPS module
- NMEA 2.0 compliant
- Internal antenna

1.5 Sensors

- Embedded temperature sensor
- Door opening detection system

1.6 Power

- PowerOverEthernet supply : 48V class 0 (Max : 15Watts, Nominal : 3Watts (Lora Rx mode with GSM network attachement)
- DC power supply (ex : solar panel use) : 11 to 30Volts
- Power control : ignition detection, software OFF switching
- Back-up battery (up to about 1 minute allowing safe powerdown)

This document is owned by **KLK** and can not be distributed, used and/or reproduced without **KERLINK** written authorization.

1.7 Mechanical

- Polycarbonate enclosure - Dimensions : 315 x 170 x 215 (including mounting kit) - Weight: about 2 kg (including mounting kit)

Connectors

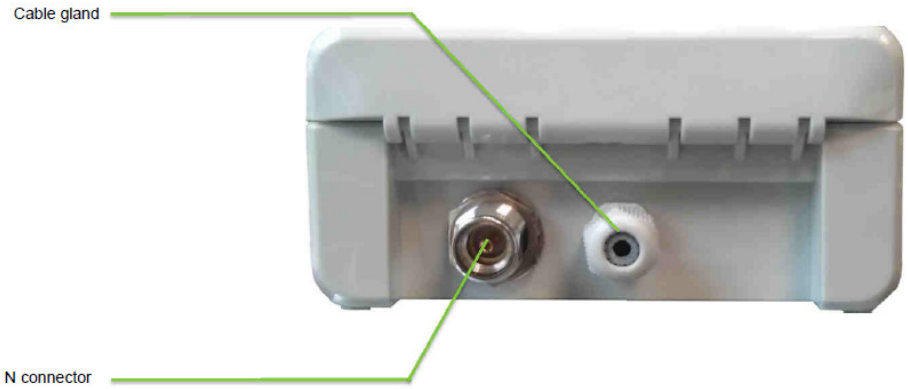

1.8 Mounting

The provided mouting kit allows three different mounting options:
- Wall mounting by screwing
- Pole mounting by U-bolt (max diameter : 60mm)
- Metallic strapping mounting (tube, pipe, flue...)

The provided mouting kit can be splitted to install apart the antenna.

1.9 Environmental

- Full operating range: -20°C to +60°C
- Humidity: 95%, non condensing (protective vent)
- MTBF: 20 years (according to MIL-HDBK-217F) - *non contractual*
- Ingress protection: IP67
- Impact resistance: IK08
- UV resistance: UL508

1.11 Hardware block diagram

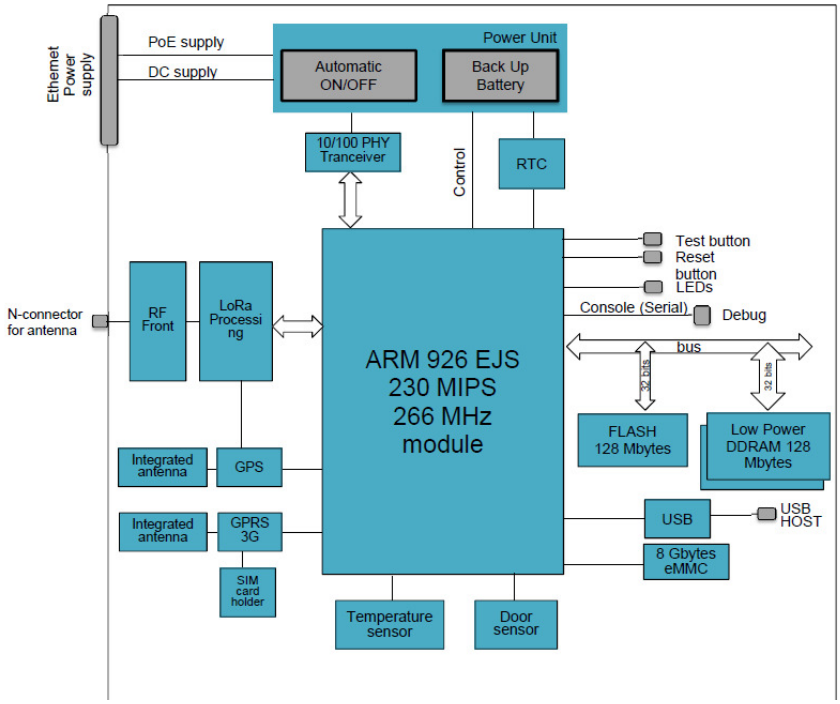

This document is owned by **KLK** and can not be distributed, used and/or reproduced without **KERLINK** written authorization.

2. Software key features

2.1 Operating system

- Standard Long Term Support Linux version 3.10
- File system YAFFS2 (NAND) and EXT4 (eMMC)
- Support of all GNU/Linux tools (cross-compiled for ARM)
- POSIX1 file system
- TCP/IP BSD4.4 socket on network bearer

2.2 Software packages included (non-exhaustive)

- PYTHON
- SQLITE

Optional

- JAVA ORACLE OJEC VM (J2M2 compliant based on CDC 1.1.2 profile)

Networking:

- DHCP client and server
- FTP server
- SSH server
- NFS client
- Firewalling (iptables) and IP routing (layer 3)
- HTTP server
- TFTP server
- L2TP tunneling

2.3 Kerlink M2M services interfaces

- Simple and reduced interface using XML format over TCP/IP socket providing value added services based on action programming
- Mobile SMS management
- System alarm (memory and CPU usage, hardware failure)
- Internal statistic delivery
- Automatic or manual bearer selection
- Power control management

Optional

- Wanesy ready to remote supervision, maintenance and HQ data transfer.

2.4 Software development tools

- C/C++ Linux cross compilation toolchain based on GNU tools (GCC 4.5.2, Glibc 2.13)
- User manual and Kerlink M2M services description
- Complete C-source code set of example for remote and embedded applications
- On-line wiki

Optional

- Debug probe

3. Optional accessories

- **Antennas** : various antennas can be proposed to adapt to environment (omnidirectionnal, directionnal, high gain).

4. In option : Wanesy Ready

Wanesy is a M2M platform provided by Kerlink to :

- interconnect devices with customer ERP
- supervise remote device (status, alarm, log...)
- maintain (remote maintenance, update and control

This document is owned by **KLK** and can not be distributed, used and/or reproduced without **KERLINK** written authorization.

5.2.2 LoRa IOT Station 915

Product datasheet KERLINK - LoRa IoT Station -915FCC

DATASHEET

PRELIMINARY

LoRa IoT Station -915FCC

LoRa gateway for IoT chain

- 915 MHz FCC Hybrid Mode ISM band LongRange™ bidirectional communications capabilities
- Embedded, remote and open low power communication station
- Open development framework based on standard Linux OS
- WAN connectivity over GPRS/EDGE/3G or Ethernet

1. Hardware Key Features

1.1 System

CPU:
- Based on ARM 926EJS core processor
- Up to 230 MIPS
- Real-time clock saved by battery
- Hardware watchdog
- Optimised power consumption management

Volatile memory:
- Low power DDRAM 128 MB
- 10 MB used for system firmware

Non-volatile memory:
- 128 MB NAND flash (40MB used for system firmware and autorecovery mechanism)
- 8 GB eMMC

1.2 User interfaces

Internal LEDs:
- Operational status : power, GSM signal strenght level, WAN connectivity indicator

Internal push buttons:
- Manual station reset
- Manual test or installation procedure launch

USB host interface allowing :
- Local software upgrade with simple USB key
- USB/NET local configuration/maintenance access

1.3 Communication

LongRange:
- Incorporate LoRa (TM) bidirectional communications technology (902-928 MHz ISM band-hybrid mode)
- Sensitivity : up to -141 dBm
- 49 LoRa Demodulators over 9 channels
- More than 15km range in sub-urban situation
- More than 2km range in urban situation

WWAN:
- HSDPA/UMTS (850/1900MHz) : DL 3.6 Mbps / UL 384 Kbps (HSDPA), UL/DL 384Kbps (UMTS)
- GPRS/EDGE (850/1900MHz) : UL/DL 85.6Kbps (GPRS), UL/DL 236.8Kbps (EDGE)
- IMEI inside
- Internal antenna

Ethernet :
- PowerOverEthernet IEEE 802.3af 10/100 Base T compliant

1.4 Positionning/Timing

GPS:
- Integrated GNSS high sensitivity GPS module
- NMEA 2.0 compliant
- Internal antenna

1.5 Sensors

- Embedded temperature sensor
- Door opening detection system

1.6 Power

- PowerOverEthernet supply : 48V class 0 (Max : 15Watts, Nominal : 3Watts (Lora Rx mode with GSM network attachement)
- DC power supply (ex : solar panel use) : 11 to 30Volts
- Power control : ignition detection, software OFF switching
- Back-up battery (up to about 1 minute allowing safe powerdown)

This document is owned by **KLK** and can not be distributed, used and/or reproduced without **KERLINK** written authorization.

1.7 Mechanical

- Polycarbonate enclosure - Dimensions : 315 x 170 x 215 (including mounting kit) - Weight: about 2 kg (including mounting kit)

Connectors

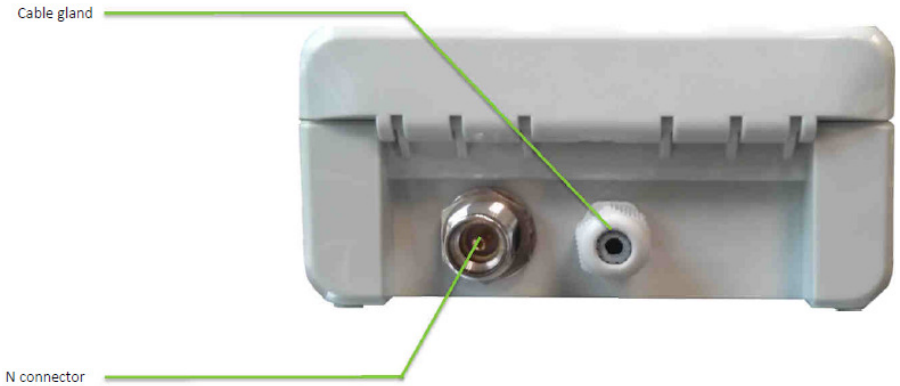

1.8 Mounting

The provided mouting kit allows three different mounting options:
- Wall mounting by screwing
- Pole mounting by U-bolt (max diameter : 60mm)
- Metallic strapping mounting (tube, pipe, flue...)

The provided mouting kit can be splitted to install apart the antenna.

1.9 Environmental

- Full operating range: -20°C to +60°C
- Humidity: 95%, non condensing (protective vent)
- MTBF: 20 years (according to MIL-HDBK-217F) - *non contractual*
- Ingress protection: IP67
- Impact resistance: IK08
- UV resistance: UL508

1.11 Hardware block diagram

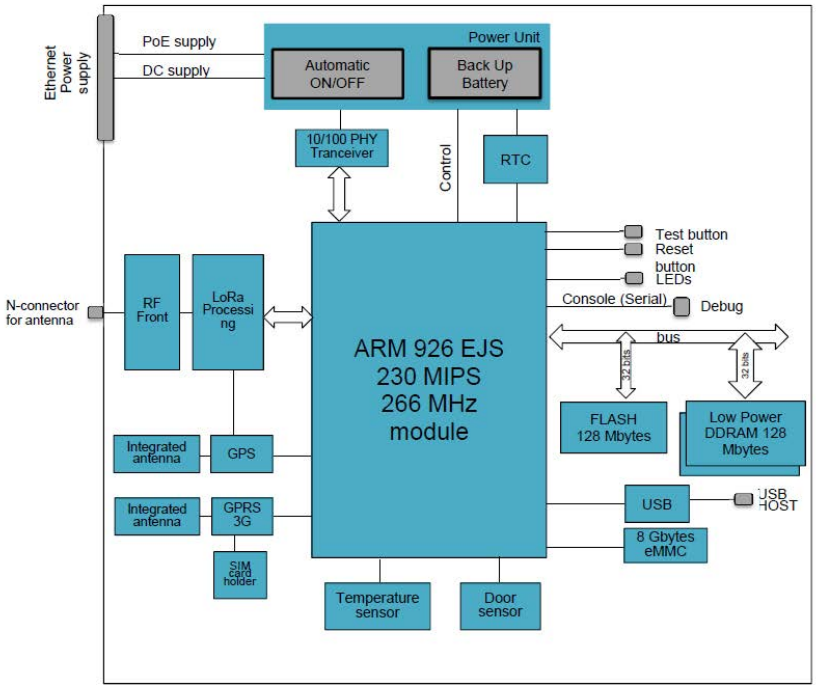

This document is owned by **KLK** and can not be distributed, used and/or reproduced without **KERLINK** written authorization.

2. Software key features

2.1 Operating system

- Standard Long Term Support Linux version 3.10
- File system YAFFS2 (NAND) and EXT4 (eMMC)
- Support of all GNU/Linux tools (cross-compiled for ARM)
- POSIX1 file system
- TCP/IP BSD4.4 socket on network bearer

2.2 Software packages included (non-exhaustive)

- PYTHON
- SQLITE

Optional
- JAVA ORACLE OJEC VM (J2M2 compliant based on CDC 1.1.2 profile)

Networking:
- DHCP client and server
- FTP server
- SSH server
- NFS client
- Firewalling (iptables) and IP routing (layer 3)
- HTTP server
- TFTP server
- L2TP tunneling

2.3 Kerlink M2M services interfaces

- Simple and reduced interface using XML format over TCP/IP socket providing value added services based on action programming
- Mobile SMS management
- System alarm (memory and CPU usage, hardware failure)
- Internal statistic delivery
- Automatic or manual bearer selection
- Power control management

Optional
- Wanesy ready to remote supervision and maintenance.

2.4 Software development tools

- C/C++ Linux cross compilation toolchain based on GNU tools (GCC 4.5.2, Glibc 2.13)
- User manual and Kerlink M2M services description
- Complete C-source code set of example for remote and embedded applications
- On-line wiki

Optional
- Debug probe

3. Optional accessories

- **Antennas** : various antennas can be proposed to adapt to environment (omnidirectionnal, directionnal, high gain).

4. In option : Wanesy Ready

Wanesy is a M2M platform provided by Kerlink to :
- interconnect devices with customer ERP
- supervise remote device (status, alarm, log...)
- maintain (remote maintenance, update and control

This document is owned by **KLK** and can not be distributed, used and/or reproduced without **KERLINK** written authorization.

5.2.3 LoRa IOT Station 923

Product datasheet KERLINK - LoRa IoT Station

DATASHEET

LoRa IoT Station - 923

PRELIMINARY

LoRa gateway for IoT chain

- 915-928 MHz ISM band LongRange™ bidirectional communications capabilities
- Embedded, remote and open low power communication station
- Open development framework based on standard Linux OS
- WAN connectivity over GPRS/EDGE/3G or Ethernet

1. Hardware Key Features

1.1 System

CPU:
- Based on ARM 926EJS core processor
- Up to 230 MIPS
- Real-time clock saved by battery
- Hardware watchdog
- Optimised power consumption

Volatile memory:
- Low power DDRAM 128 MB
- 10 MB used for system firmware

Non-volatile memory:
- 128 MB NAND flash (40MB used for system firmware and autorecovery mechanism)
- 8 GB eMMC

1.2 User interfaces

Internal LEDs:
- Operational status : power, GSM signal strenght level, WAN connectivity indicator

Internal push buttons:
- Manual station reset
- Manual test or installation procedure launch

USB host interface allowing :
- Local software upgrade with simple USB key
- USB/NET local configuration/maintenance access

1.3 Communication

LongRange:
- Incorporate LoRa (TM) bidirectional communications technology (RX : 915-925 MHz, TX : 922-928MHz)
- Sensitivity : up to -141 dBm
- 49 LoRa Demodulators over 9 channels
- More than 15km range in direct sight

WWAN:
- HSDPA/UMTS (900/2100MHz) : DL 3.6 Mbps / UL 384 Kbps (HSDPA), UL/DL 384Kbps (UMTS)
- GPRS/EDGE (850/900/1800/1900MHz) : UL/DL 85.6Kbps (GPRS), UL/DL 236.8Kbps (EDGE)
- IMEI inside
- Internal antenna

Ethernet :
- PowerOverEthernet IEEE 802.3af 10/100 Base T compliant

1.4 Positionning/Timing

GPS:
- Integrated GNSS high sensitivity GPS module
- NMEA 2.0 compliant
- Internal antenna

1.5 Sensors

- Embedded temperature sensor
- Door opening detection system

1.6 Power

- PowerOverEthernet supply : 48V class 0 (Max : 15Watts, Nominal : 3Watts (Lora Rx mode with GSM network attachement)
- DC power supply (ex : solar panel use) : 11 to 30Volts
- Power control : ignition detection, software OFF switching
- Back-up battery (up to about 1 minute allowing safe powerdown)

This document is owned by **KLK** and can not be distributed, used and/or reproduced without **KERLINK** written authorization.

1.7 Mechanical

- Polycarbonate enclosure - Dimensions : 315 x 170 x 215 (including mounting kit) - Weight: about 2 kg (including mounting kit)

Connectors

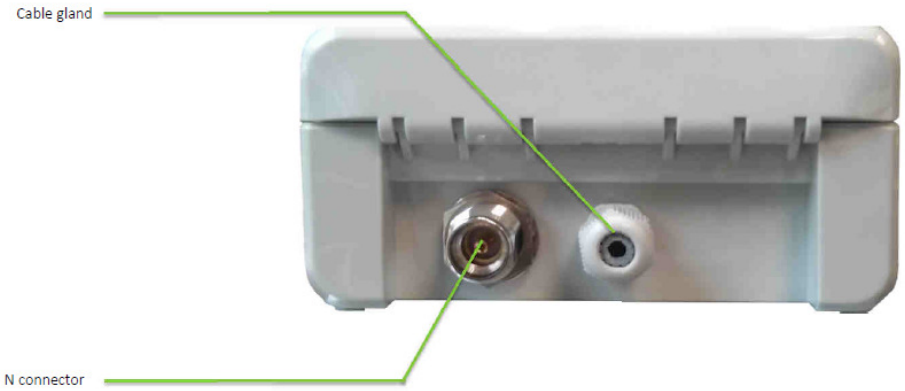

1.8 Mounting

The provided mouting kit allows three different mounting options:
- Wall mounting by screwing
- Pole mounting by U-bolt (max diameter : 80mm)
- Metallic strapping mounting (tube, pipe, flue...)

The provided mouting kit can be splitted to install apart the antenna.

1.9 Environmental

- Full operating range: -20°C to +60°C
- Humidity: 95%, non condensing (protective vent)
- MTBF: 20 years (according to MIL-HDBK-217F) - *non contractual*
- Ingress protection: IP67
- Impact resistance: IK08
- UV resistance: UL508

1.11 Hardware block diagram

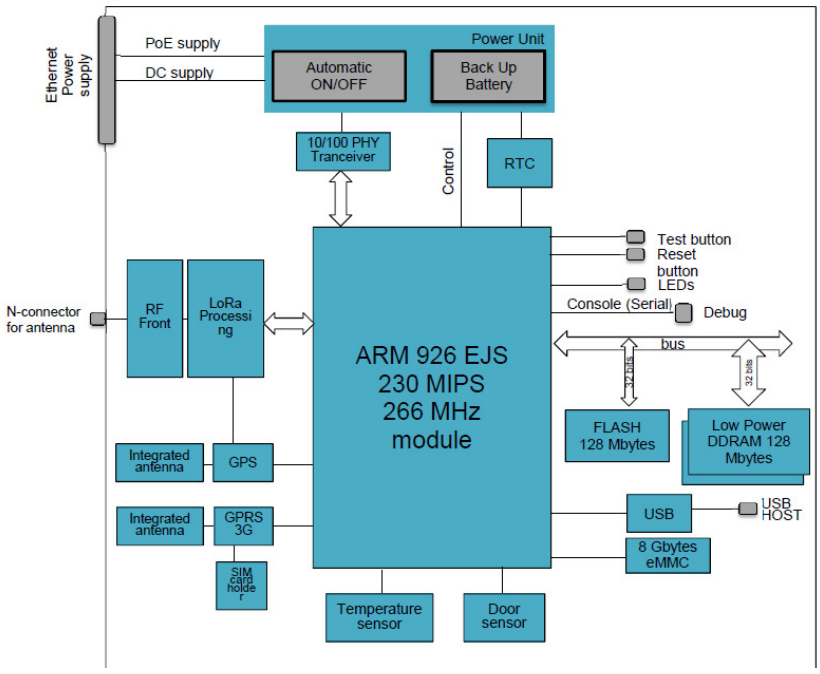

This document is owned by **KLK** and can not be distributed, used and/or reproduced without **KERLINK** written authorization.

2. Software key features

2.1 Operating system

- Standard Long Term Support Linux version 3.10
- File system YAFFS2 (NAND) and EXT4 (eMMC)
- Support of all GNU/Linux tools (cross-compiled for ARM)
- POSIX1 file system
- TCP/IP BSD4.4 socket on network bearer

2.2 Software packages included (non-exhaustive)

- PYTHON
- SQLITE

Optional

- JAVA ORACLE OJEC VM (J2M2 compliant based on CDC 1.1.2 profile)

Networking:

- DHCP client and server
- FTP server
- SSH server
- NFS client
- Firewalling (iptables) and IP routing (layer 3)
- HTTP server
- TFTP server
- L2TP tunneling

2.3 Kerlink M2M services interfaces

- Simple and reduced interface using XML format over TCP/IP socket providing value added services based on action programming
- Mobile SMS management
- System alarm (memory and CPU usage, hardware failure)
- Internal statistic delivery
- Automatic or manual bearer selection
- Power control management

Optional

- Wanesy ready to remote supervision, maintenance and HQ data transfer.

2.4 Software development tools

- C/C++ Linux cross compilation toolchain based on GNU tools (GCC 4.5.2, Glibc 2.13)
- User manual and Kerlink M2M services description
- Complete C-source code set of example for remote and embedded applications
- On-line wiki

Optional

- Debug probe

3. Optional accessories

- **Antennas** : various antennas can be proposed to adapt to environment (omnidirectionnal, directionnal, high gain).
- **External cavity filters**: Radio filtering can be adjusted adding optional external cavity filter according to specific colocation constraints,

4. In option : Wanesy Ready

Wanesy is a M2M platform provided by Kerlink to :

- interconnect devices with customer ERP
- supervise remote device (status, alarm, log...)
- maintain (remote maintenance, update and control

5.3 Mechanical implementation

The LoRa IoT Station is based on a high impact resistant polycarbonate wall mounting cabinet that withstand harsh industrial and outdoor environments.
It offers excellent flammability rating, good UV resistance and also good chemical resistance.
The dimensions are 231 mm x 125 mm x 60 mm. It is rated IP67.
The opening system is simple: clipping (screwing is optional)

This document is owned by **KLK** and can not be distributed, used and/or reproduced without **KERLINK** written authorization.

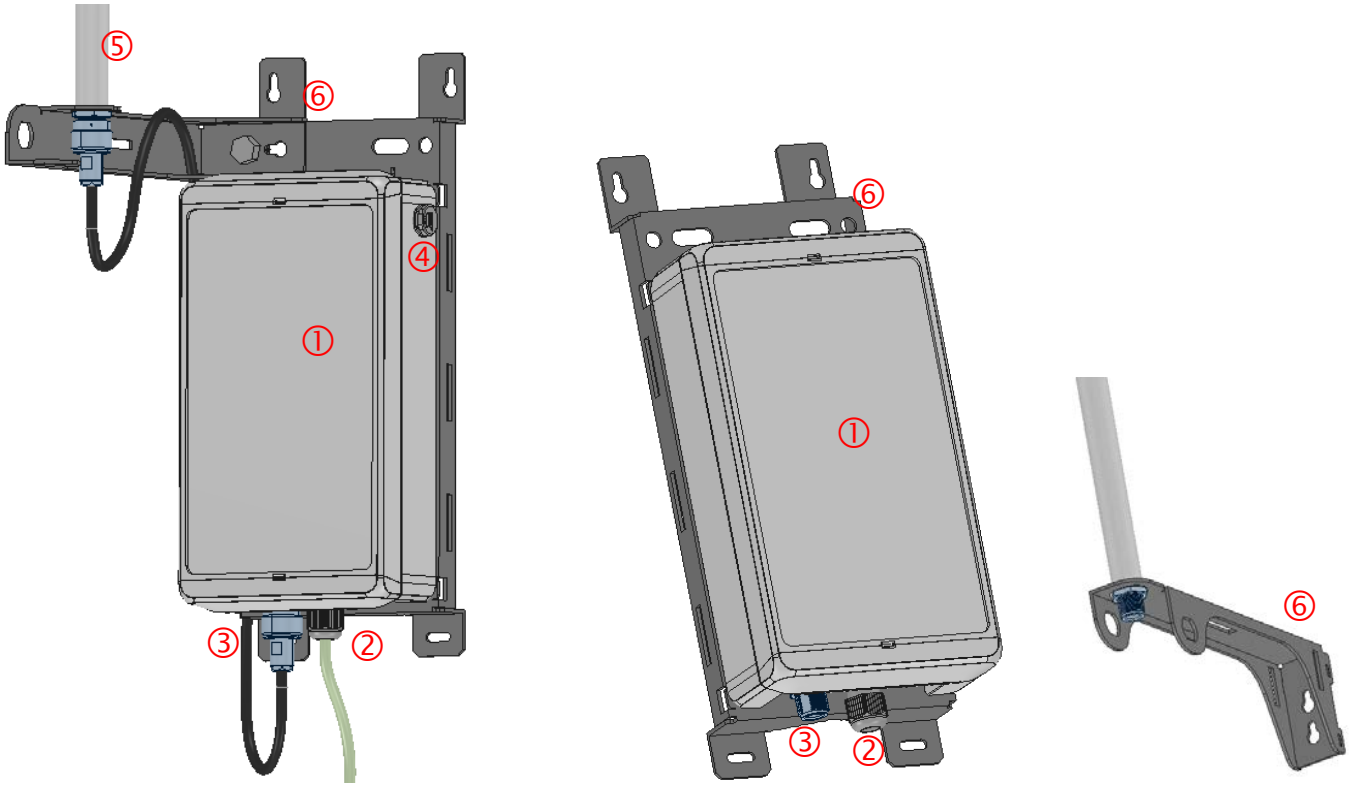

Figure 3 : LoRa IoT Station casing - external view

Figure 4 : POE injector (example)

This document is owned by **KLK** and can not be distributed, used and/or reproduced without **KERLINK** written authorization.

Figure 5 : LoRa IoT Station casing - internal view

The LoRa IoT Station is composed of:

- The enclosure itself including:
  - The casing (item 1)
  - 1 cable gland for RJ45 POE (item 2). The LoRa IoT Station is delivered without RJ45 POE cable (Ethernet cable).
  - 1 N connector (item 3) to connect LoRa antenna
  - 1 pressure stabilizer for protection against condensation (item 4)
- LoRa RF antenna connection with N connector (item 5) and its cable
- A POE injector (item 7) and its power supply cable.
- The internal shielding (item 8)
- A mounting kit (item 6) designed to answer different installation configurations:
  - Pole mounting by U-bolt (delivered by default)
  - Wall mounting
  - Metallic strapping mounting (tube, pipe, flue...)

The mounting kit owns a full independent universal antenna support that could be mounted on the enclosure support (by default) or directly on a pole, a wall …

This document is owned by KLK and can not be distributed, used and/or reproduced without KERLINK written authorization.

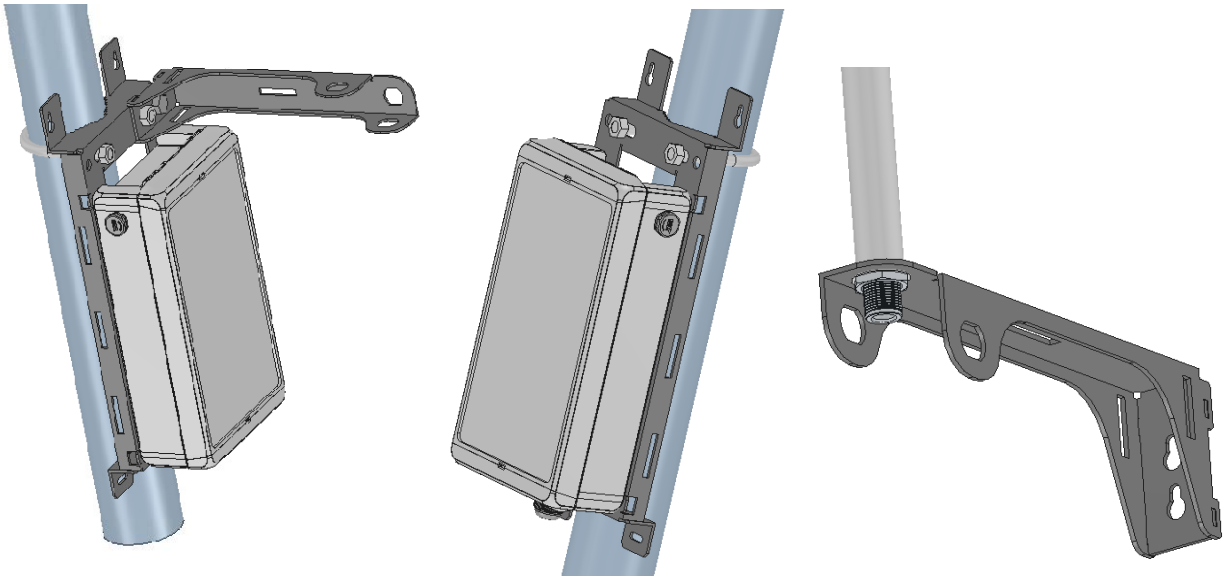

Figure 6 : Mounting kit

5.4 Stickers

The LoRa IoT Station has stickers placed inside or outside the casing:

- A sticker on the door including LoRa IoT Station serial number, regulatory markings and electrical information (item 9)
- A sticker explaining the LEDs behaviour (item 10)
- A sticker outside the casing including regulatory marking and sentences depending on the countries (FCC ID, IC ID, etc …).

This document is owned by KLK and can not be distributed, used and/or reproduced without KERLINK written authorization.

6 Regulations

6.1 LoRa IoT Station 868

LoRa IoT Station 868 complies with requirements listed in the article 3 of the R&TTE 1999/5/EC Directive

1 – Electromagnetic compatibility (article 3.1-b of the R&TTE Directive)

Applied standard(s):	EN 301 489-1	issue 1.9.2
	EN 301 489-3	issue 1.4.1
	EN 301 489-7	issue 1.3.1
	EN 301 489-19	issue 1.2.1

2 – Efficient use of the radio frequency spectrum (article 3.2 of the R&TTE Directive)

Applied standard(s):		
	EN 301 511	issue 9.0.2
	EN 301 908	issue 6.2.1
	EN 300 440-1	issue 1.6.1
	EN 300 440-2	issue 1.4.1
	EN 300 220-1	issue 2.4.1
	EN 300 220-2	issue 2.4.1

3 – Safety (article 3.1-a of the R&TTE Directive)

Applied standard(s):	EN 60 950-1	(Ed. 2006/A11 : 2009/A1 : 2010/A12:2011)

4 – Magnetic field exposure

Applied standard(s):	EN 50 385	(Ed. 2002)
	EN 62 479	(Ed. 2010)

The LoRa IoT Station 868 is considered as a category 2 receiver according to the EN 300 220-1.
The LoRa IoT Station 868 has CE marking.

In Europe, the LoRa IoT Station must comply to the ERC 70-3 requirements regarding duty cycle and maximum EIRP. They are summarized in the following table:

ERC 70-03 Band	Frequency (MHz)	Power	Duty cycle
g1	865-868	"14dBm erp 6,5dBm/100KHz"	1,0%
g1.1	868-868,6	14dBm erp	1%
g1.2	868,7-869,2	14dBm erp	0,1%
g1.3	869,4-869,65	27dBm erp	10%
g1.4	869,7-870	14dBm erp	1%
g2	870-873	14dBm erp	0,1%
g2.1	870-873	14dBm erp	1%
Annex2/c	870-873	27dBm erp	2,5%

This document is owned by **KLK** and can not be distributed, used and/or reproduced without **KERLINK** written authorization.

If the LoRa antenna is changed, the output power must be adjusted to take into account the gain of the antenna to not overrule the ERC 70-3 regulation.
For other countries, outside Europe, check the maximum EIRP and duty cycle allowed.

6.2 LoRa IoT Station 915

The LoRa IoT Station is compliant to:

- IEC 60950 -1

The LoRa is also compliant to both FCC and IC regulations.
Applicable documents:

- CFR 47 FCC Part 15
  - FCC 47 CFR Part 15 : 2014 - Part 15- Radio frequency devices
  - FCC PART 15.247 - Operation within the bands 902–928 MHz, 2400–2483.5 MHz, and 5725–5850 MHz. (frequency hopping and digitally modulated)
    - FCC Part 15.207 conducted emissions on AC mains in the band 150kHz – 30MHz
    - FCC Part 15.247 intentional radiated emissions
    - FCC Part 15.215 Additional provisions to the general radiated emissions limitations
- RSS 247
  - RSS-Gen – Issue 4, November 2014- General requirements and Information for the Certification of radio Apparatus
  - RSS-247 Issue 1, May 2015 - Digital Transmission Systems (DTSS), Frequency Hopping Systems (FHSS) and Licence-Exempt Local Area Network (LE-LAN) Devices

The associated FCC and IC identifiers are:

FCC ID : 2AFYS-KLK915LOI
IC : 20637-KLK915LOI
Model : LORA IOT STATION 915

Contains FCCID : QISMU509C
Contient IC : 6369A-MU509C
Model : MU509-c

Some conditions have to be respected to maintain the FCC and IC compliance of the devices vin USA and Canada. They are detailed in the following paragraphs.
For others countries, check the specific regulations regarding maximum EIRP and duty cycle allowed.

6.2.1 FCC

As stated by the external sticker on the enclosure, “This device complies with Part 15 of the FCC Rules. Operation is subject to the following two conditions: (1) this device may not cause harmful interference, and (2) this device must accept any interference received, including interference that may cause undesired operation.”

This document is owned by KLK and can not be distributed, used and/or reproduced without KERLINK written authorization.

Changes or modifications not expressly approved by the party responsible for compliance could void the user's authority to operate the equipment.

This equipment has been tested and found to comply with the limits for a Class A digital device, pursuant to part 15 of the FCC Rules. These limits are designed to provide reasonable protection against harmful interference when the equipment is operated in a commercial environment. This equipment generates, uses, and can radiate radio frequency energy and, if not installed and used in accordance with the instruction manual, may cause harmful interference to radio communications. Operation of this equipment in a residential area is likely to cause harmful interference in which case the user will be required to correct the interference at his own expense.

This device must be professionally installed.

Also, some specific recommendations for exposure to magnetic fields must be followed:
This equipment complies with FCC's radiation exposure limits set forth for an uncontrolled environment under the following conditions:

1. This equipment should be installed and operated such that a minimum separation distance of 20 cm is maintained between the radiator (antenna) and user's/nearby person's body at all times.
2. This transmitter must not be co-located or operating in conjunction with any other antenna or transmitter.

6.2.2 IC

This device complies with Industry Canada's licence-exempt RSSs.
Operation is subject to the following two conditions:

1. This device may not cause harmful interference, and
2. This device must accept any interference received, including interference that may cause undesired operation of the device.

Le présent appareil est conforme aux CNR d'Industrie Canada applicables aux appareils radio exempts de licence.
L'exploitation est autorisée aux deux conditions suivantes :

1. *L'appareil ne doit pas produire de brouillage ;*
2. *l'utilisateur de l'appareil doit accepter tout brouillage radioélectrique subi, même si le brouillage est susceptible d'en compromettre le fonctionnement.*

Under Industry Canada regulations, this radio transmitter may only operate using an antenna of a type and maximum (or lesser) gain approved for the transmitter by Industry Canada. To reduce potential radio interference to other users, that antenna type and its gain should be so chosen that the equivalent isotropically radiated power (EIRP) is not more than that necessary for successful communication.

This radio transmitter (IC –KLK915LOI) has been approved by Industry Canada to operate with the antenna types listed below with the maximum permissible gain and required antenna impedance for each antenna type indicated. Antenna types not included in this list, having a gain greater than the maximum gain indicated for that type, are strictly prohibited for use with the device.

This document is owned by KLK and can not be distributed, used and/or reproduced without KERLINK written authorization.

6.3 LoRa IOT Station 923

On going

This document is owned by **KLK** and can not be distributed, used and/or reproduced without **KERLINK** written authorization.

7 Installation procedure

This device must be professionally installed.
Changes or modifications not expressly approved by the party responsible for compliance could void the user's authority to operate the equipment.

7.1 Installation topology

7.1.1 Single station installation

With SIM Subscription

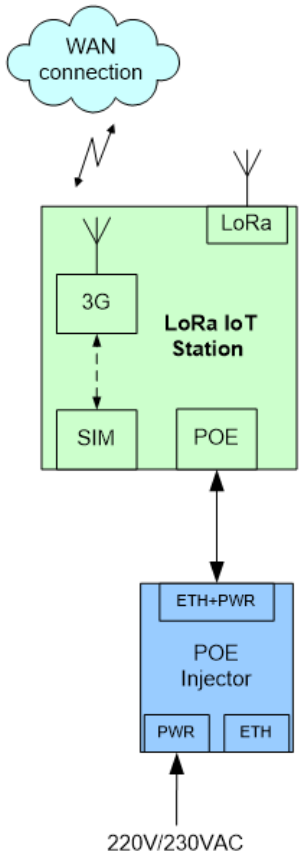

Figure 7 : Single station installation (with SIM)

Without SIM Subscription

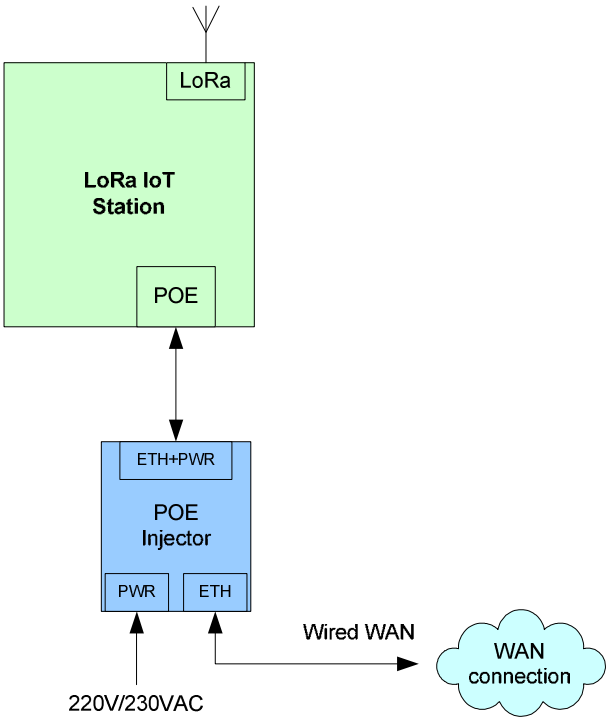

Figure 8 : Single station installation (No SIM)

This document is owned by KLK and can not be distributed, used and/or reproduced without KERLINK written authorization.

7.1.2 Multi-station installation

7.1.2.1 With SIM Subscription

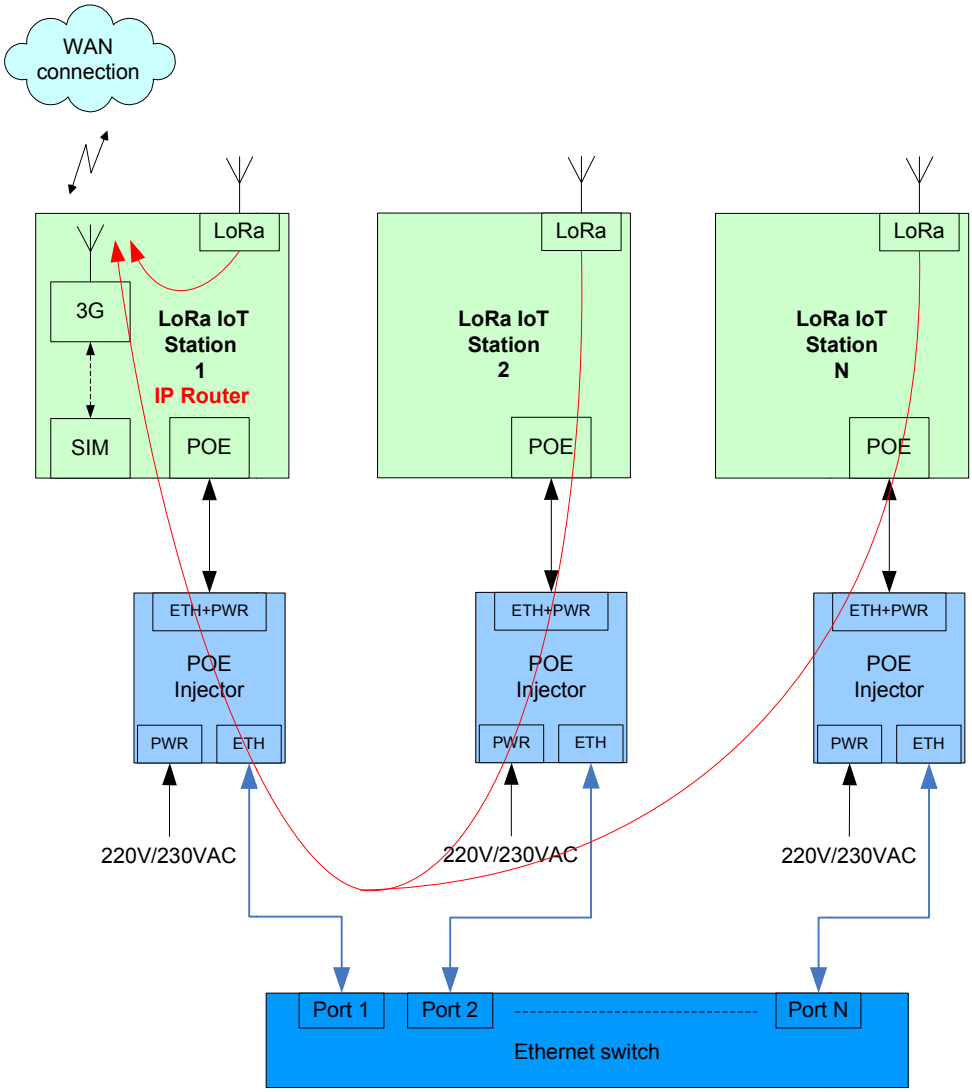

Figure 9 : Multi-station installation (with SIM)

This document is owned by KLK and can not be distributed, used and/or reproduced without KERLINK written authorization.

7.1.2.2 Without SIM Subscription

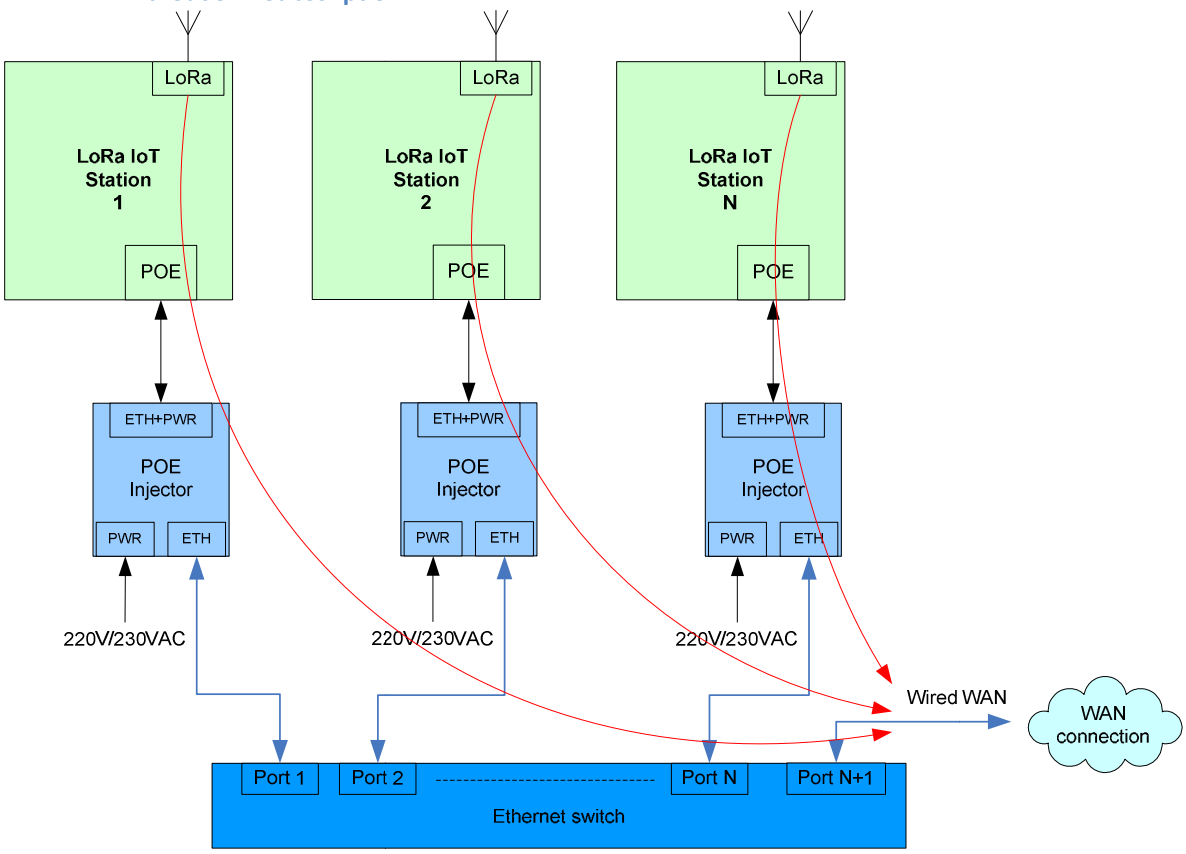

Figure 10 : Multi-station installation (No SIM)

This document is owned by KLK and can not be distributed, used and/or reproduced without KERLINK written authorization.

7.2 Electric distribution to the LoRa IoT Station

7.2.1 Safety standard

The installation must conformed to EN 60728-11 (Cabled distribution systems standard).

7.2.2 Power-Over-Ethernet (POE) power supply

The LoRa IoT Station is supplied through Ethernet cable: POE 48V class 0 (Max: 15 Watts)
The nominal current is about 70mA in Lora Rx mode with the GSM in a network attached mode.

Kerlink recommends a CAT6 SSTP standard Ethernet cable.
The maximum cable length is 100m.

On LoRa IoT Station side, the Ethernet cable must be firstly inserted through the cable gland. Then, the shield of the cable must be clamp like in the following picture to get a good earth shielding.
The internal wires have to be connected to the terminal block as described on the picture below:

Figure 11 : Ethernet connection

The cable gland allows external cable diameter from 4mm to 8 mm.

On the other side of the POE cable, RJ45 connector must be inserted into POE injector. This POE injector is connected to 230VAC.
The POE injector must be installed in accordance to its own specifications.

This document is owned by KLK and can not be distributed, used and/or reproduced without KERLINK written authorization.

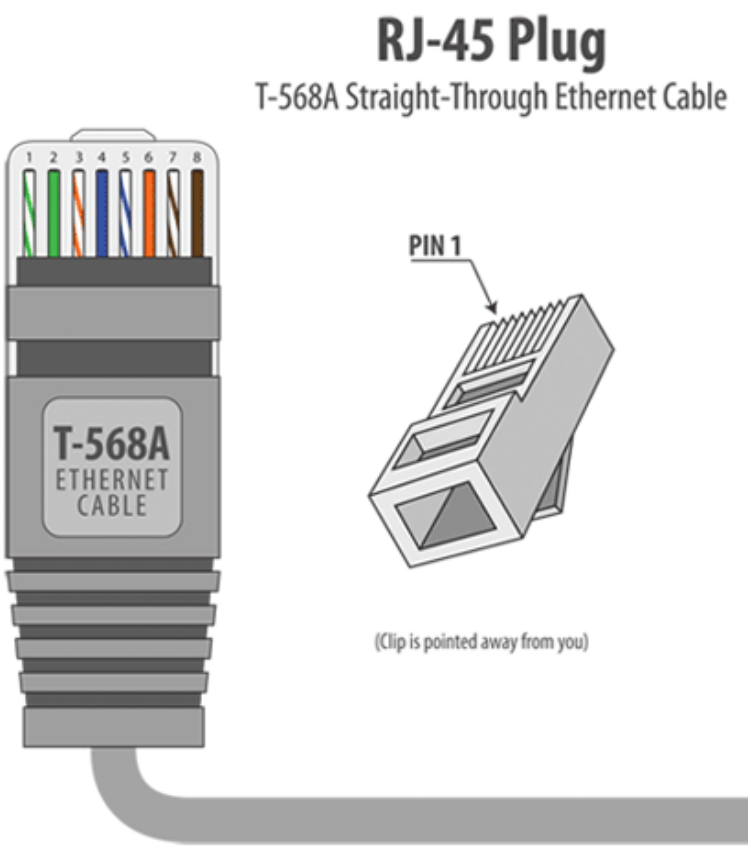

7.2.3 Solar power supply

The LoRa IoT Station can be also supply with a DC power supply as a solar panel. The input voltage range is 11 to 30VDC.
The power supply must be qualified as a limited power source.
The maximum power is 13W.
The nominal current for a 12V power supply is about 250mA in Lora Rx Mode with the GSM in a network attached mode.

After insertion through the cable gland, a 2-wire cable can be connected to the dedicated terminal block as described on the figure below:

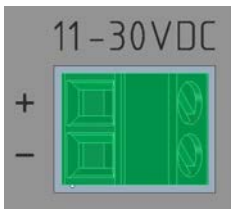

Figure 12 : DC power supply connection (temporary image)

The cable gland allows external cable diameter from 4mm to 8 mm.

This document is owned by KLK and can not be distributed, used and/or reproduced without KERLINK written authorization.

7.3 Mounting of the enclosure

7.3.1 GPS and GSM considerations

The LoRa ioT Station owns a GPS and a GSM integrated solutions. Those both technologies need to install the product in an open environment to get acceptable performances.
Depending on the LoRa IoT Station version, different WAN configuration can be used:

- LoRa IoT Station 868: EGSM900/DCS1800/UMTS900/UMTS2100
- LoRa IoT Station 915: GSM850/PCS1900/UMTS850/UMTS1900
- LoRa IoT Station 923: EGSM900/DCS1800/UMTS900/UMTS2100

7.3.2 General considerations

The LoRa IoT Station must be mounted on any concrete pedestal, concrete wall or any non-flammable surface (UL94-V0).
It must not be mounted on a flammable surface.
The mounting kit delivered with the LoRa IoT Station allows fixing the product in different ways.

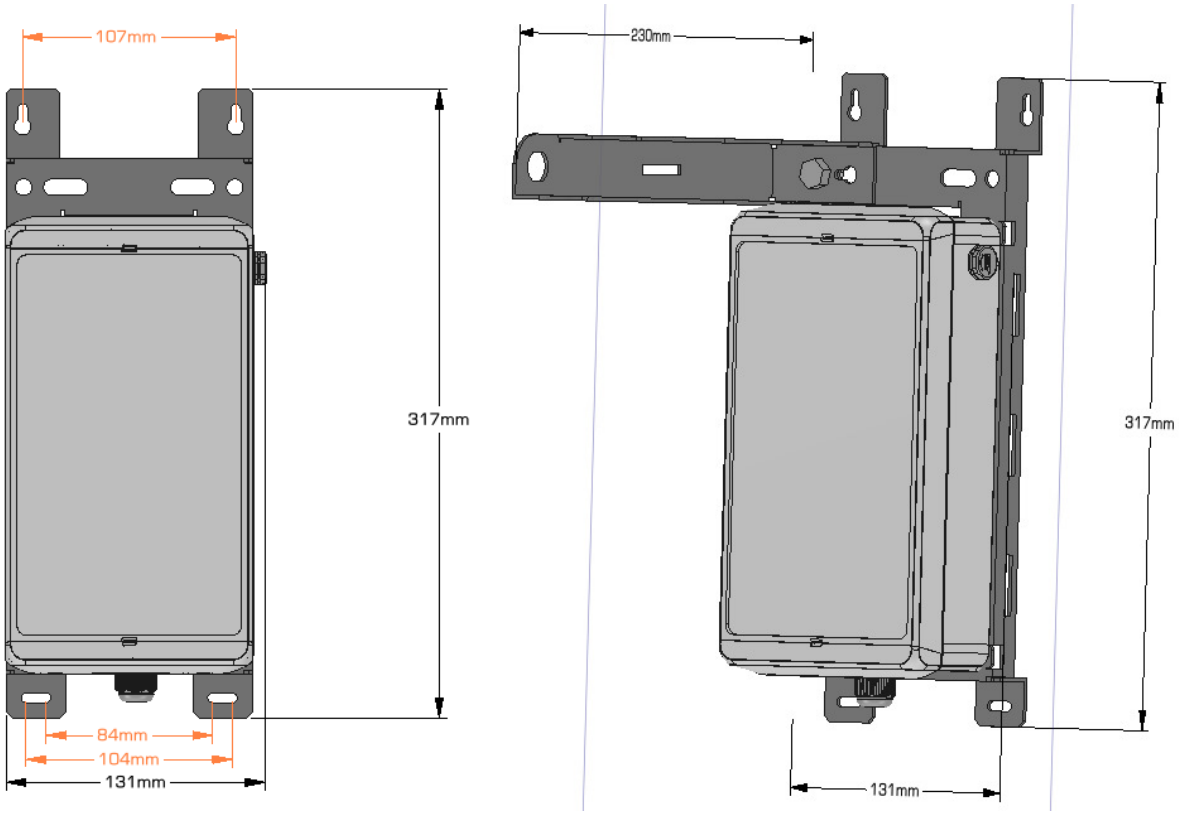

Figure 13 : Mounting kit dimensions

This document is owned by KLK and can not be distributed, used and/or reproduced without KERLINK written authorization.

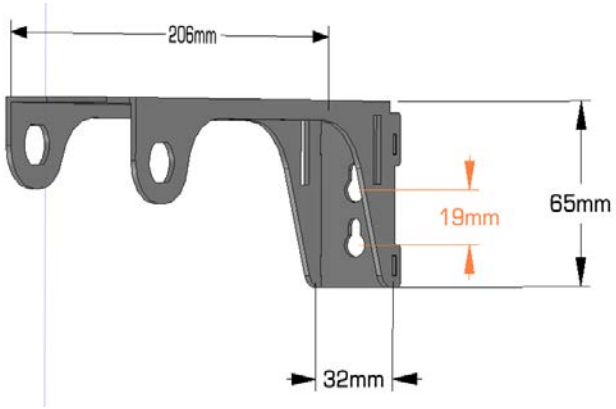

Figure 14 : Universal antenna support dimensions

7.3.3 Position of the universal antenna support vs. the enclosure

The universal antenna support as described on Figure 14 is intended for the LoRa antenna.
To optimize the colocation between the internal GSM antenna and the external LoRa antenna, a distance of 20 cm is required between both radiated parts.
Therefore, when possible we strongly recommend dissociating the universal antenna support away from the enclosure support. This is the best way to guarantee the 20 cm min distance between GSM antenna and LoRa antenna.
When the dissociation is not possible, the LoRa antenna must be placed on the opposite side of the GSM antenna as described on Figure 15.

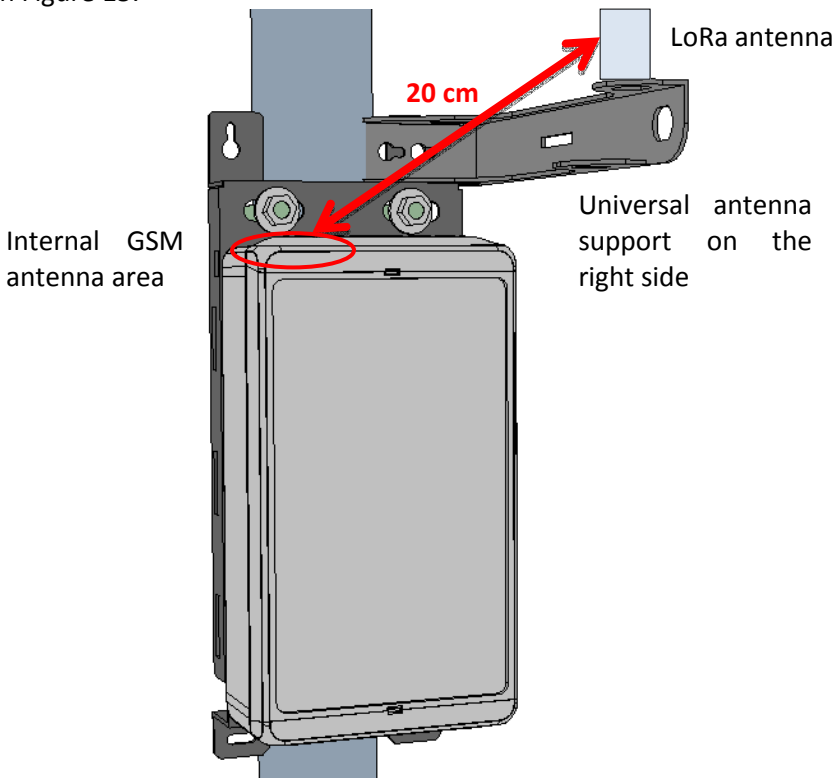

Figure 15 : Position of the universal antenna support when mounted on the enclosure support

This document is owned by KLK and can not be distributed, used and/or reproduced without KERLINK written authorization.

7.3.4 Pole mounting by U-bolt

By default, the LoRa IoT Station is delivered with a U-bolt to be mounted on a pole of a maximum diameter of 60mm.
To tighten the U-bolt, it is recommended to use nuts provided in the mounting kit.

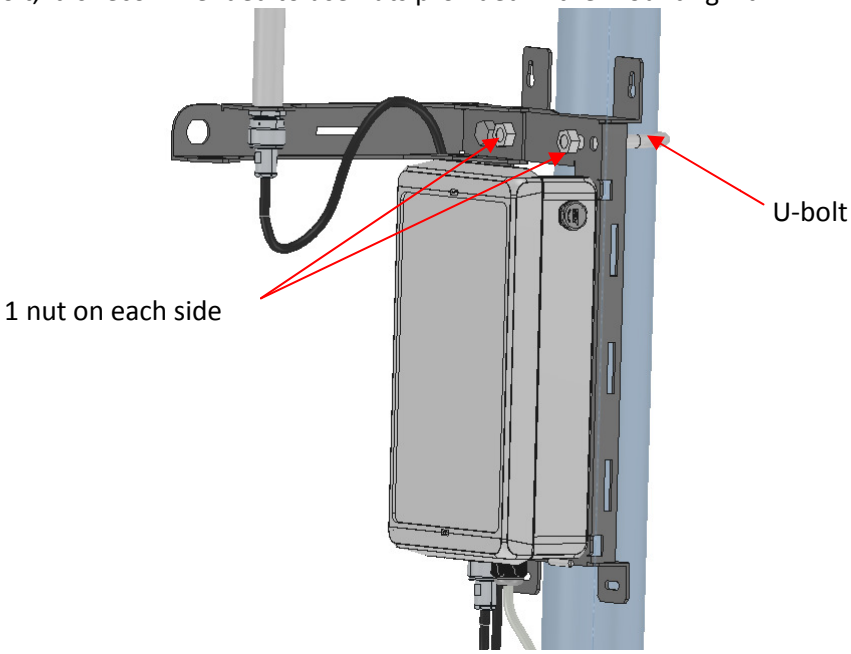

Figure 16 : Pole mount set on the enclosure

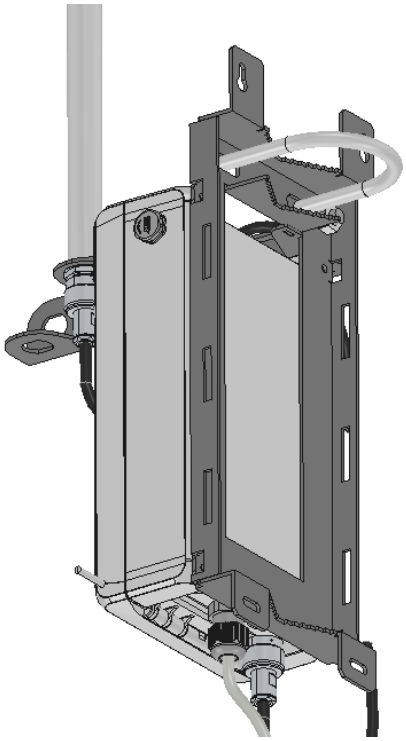

Figure 17 : Another view of the pole mounting using U-bolt (no pole represented)

This document is owned by KLK and can not be distributed, used and/or reproduced without KERLINK written authorization.

For safety reason, the metallic mounting kit must own a good earth connection. This may be ensured by a good earth connection on the metallic pole since the U-bolt is conductive.

7.3.5 Wall mounting

The LoRa IoT Station can be also mounted on a wall with M4 screws (not delivered with the mounting kit).

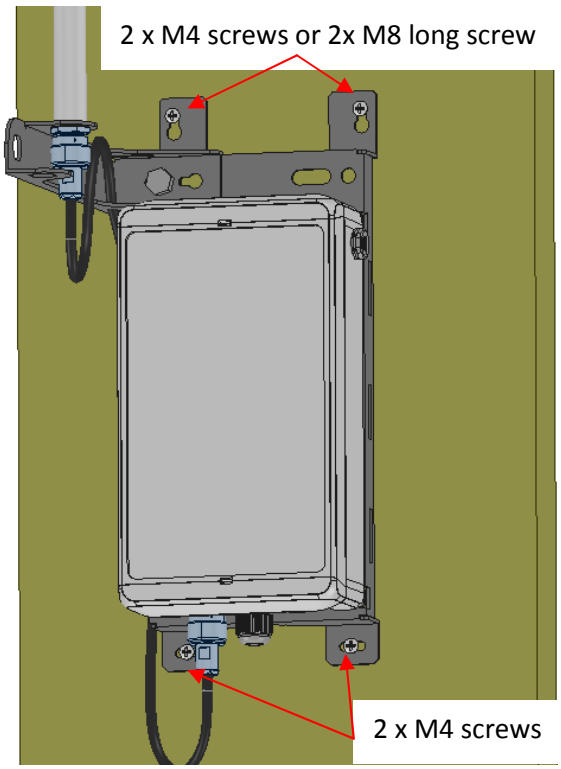

Figure 18 : Wall mount of the enclosure (front side)

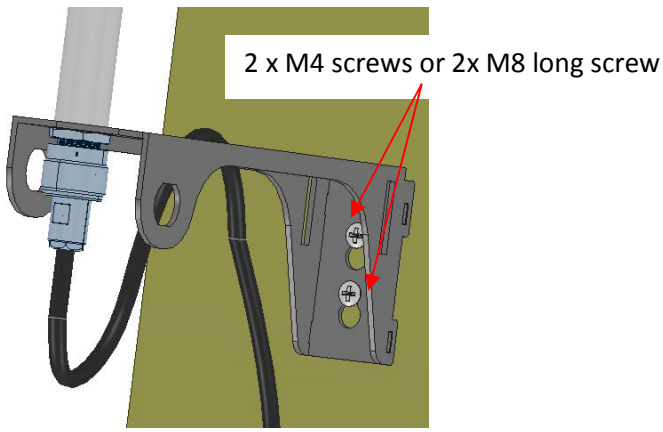

Figure 19 : Wall mount of the universal antenna support (front side)

This document is owned by **KLK** and can not be distributed, used and/or reproduced without **KERLINK** written authorization.

For safety reason, the metallic mounting kit must own a good earth connection. This may be ensured by adding an earth connection on one of the four screws (fastening not delivered by default).

7.3.6 Metallic strapping mounting

The LoRa IoT Station can be also mounted on a pole by strapping. The maximum acceptable width of the strapping is 25mm. It is recommended to use 2 metallic strappings as described on the figure below:

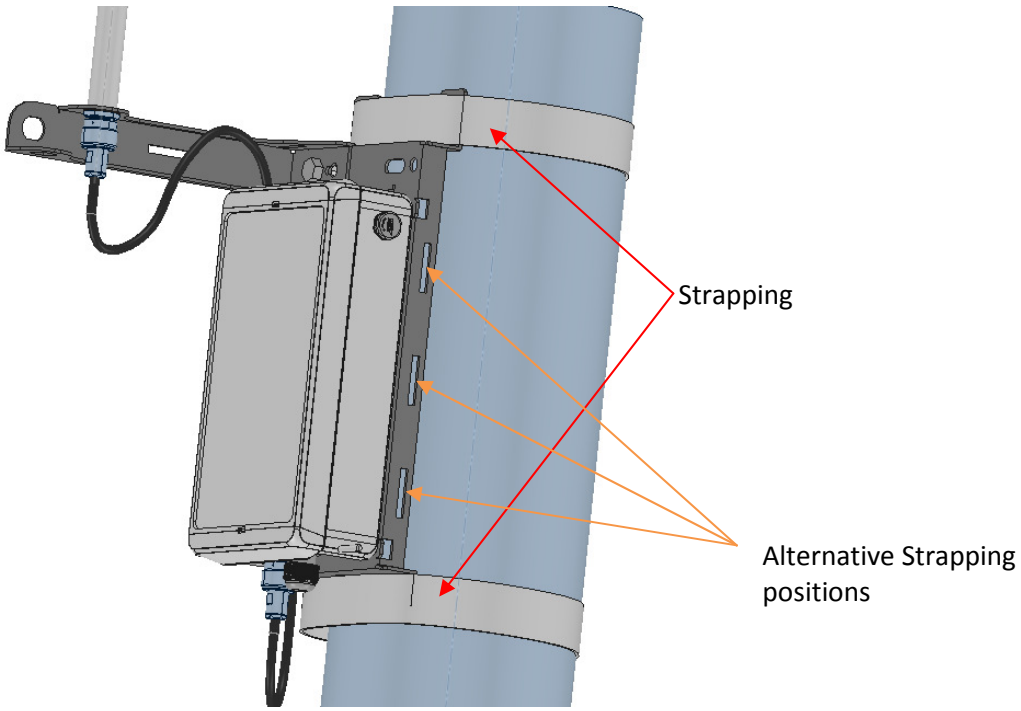

Figure 20 : Pole mount set using strapping

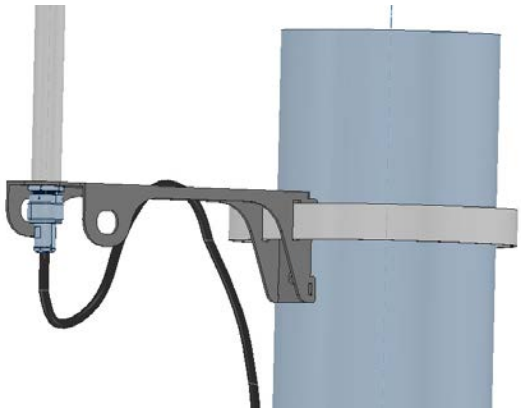

Figure 21 : Pole mounting of the universal antenna support using strapping

For safety reason, the metallic mounting kit must own a good earth connection. This may be ensured by a good earth connection on the metallic pole if strappings are conductive.

This document is owned by KLK and can not be distributed, used and/or reproduced without KERLINK written authorization.

7.3.7 Key parameters to optimise the radio performance

7.3.7.1 Height of the site

A key point to have an optimized LoRa IoT reception is the height of installation site and moreover the height of the LoRa antenna. The LoRa IoT Station must be installed as high as possible to have the better reception.

The figures below shows the RSSI of the signal vs. the distance to the end point vs. the height of the Lora IoT station (4m, 8m, 12m and 30m). Two uses cases are presented: one for a small city configuration (urban area) and one for countryside area.

The propagation model used is based on Hata model.
The frequency is 868MHz in this case but performance and conclusions at 915MHz would be almost identical.
The RSSI is the received signal by the LoRa IoT Station.
The end point EIRP is assumed to be 25mW.
The height of the end point is 1m.

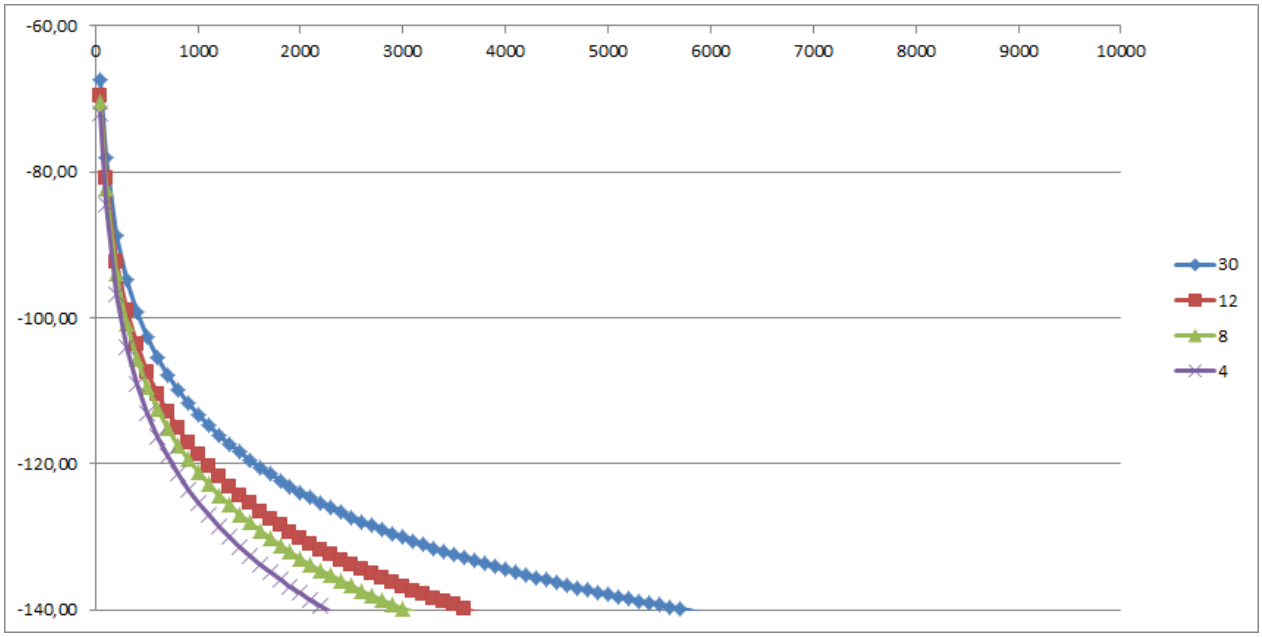

Figure 22 : Urban (small city) Hata propagation model vs height of the antenna

This document is owned by KLK and can not be distributed, used and/or reproduced without KERLINK written authorization.

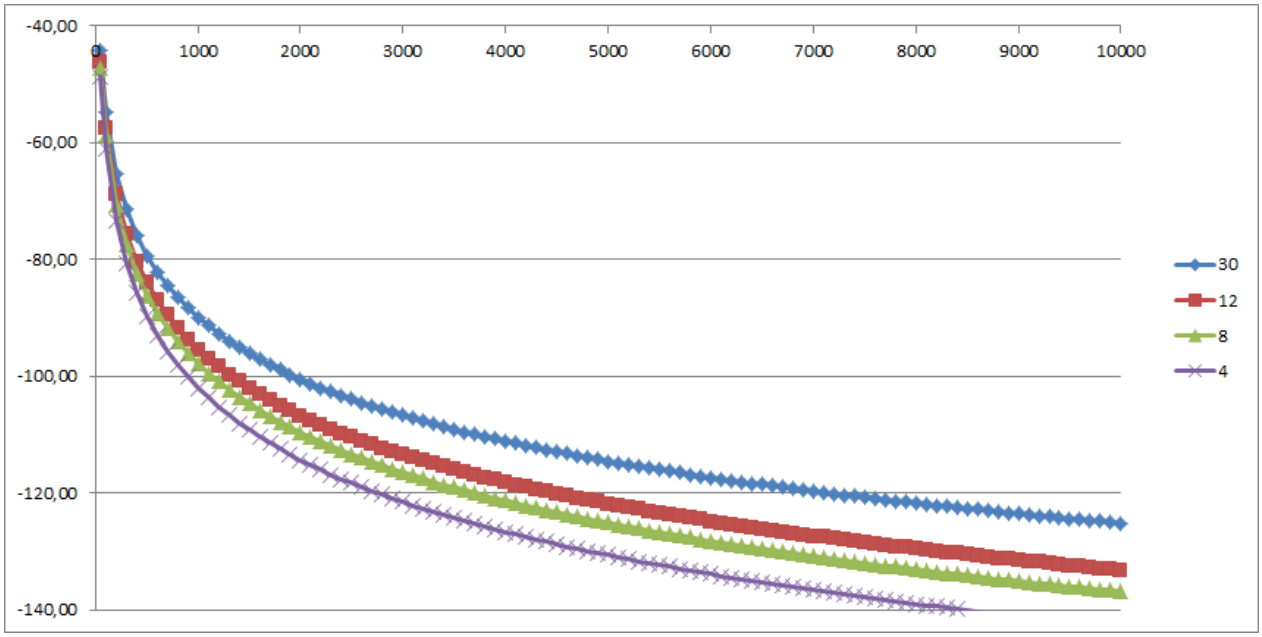

Figure 23 : Rural countryside Hata propagation model vs height of the antenna

What is noticeable is that the coverage distance at a fixed RSSI is doubled depending on the height of the antenna.

7.3.7.2 Propagation model vs area type

Predicting the RSSI and more generally the coverage of the LoRa IoT Station depends on many factors. The propagation channel must be well defined and known to have an efficient prediction.
Radio coverage simulations are recommended before the installation of the LoRa IoT Stations to make sure the gateway would cover the expected area. Contact Kerlink for more information.

In a first approach, the figure below shows the RSSI of the signal vs. the distance to the end point vs. the type of area (urban, suburban, countryside, desert). The height of the LoRa antenna is assumed to be 12 meters.

The propagation model used is based on Hata model.
The frequency is 868MHz in this case but performance and conclusions at 915MHz would be almost identical.
The RSSI is the received signal by the LoRa IoT Station.
The end point EIRP is assumed to be 25mW.
The height of the end point is 1m.

This document is owned by KLK and can not be distributed, used and/or reproduced without KERLINK written authorization.

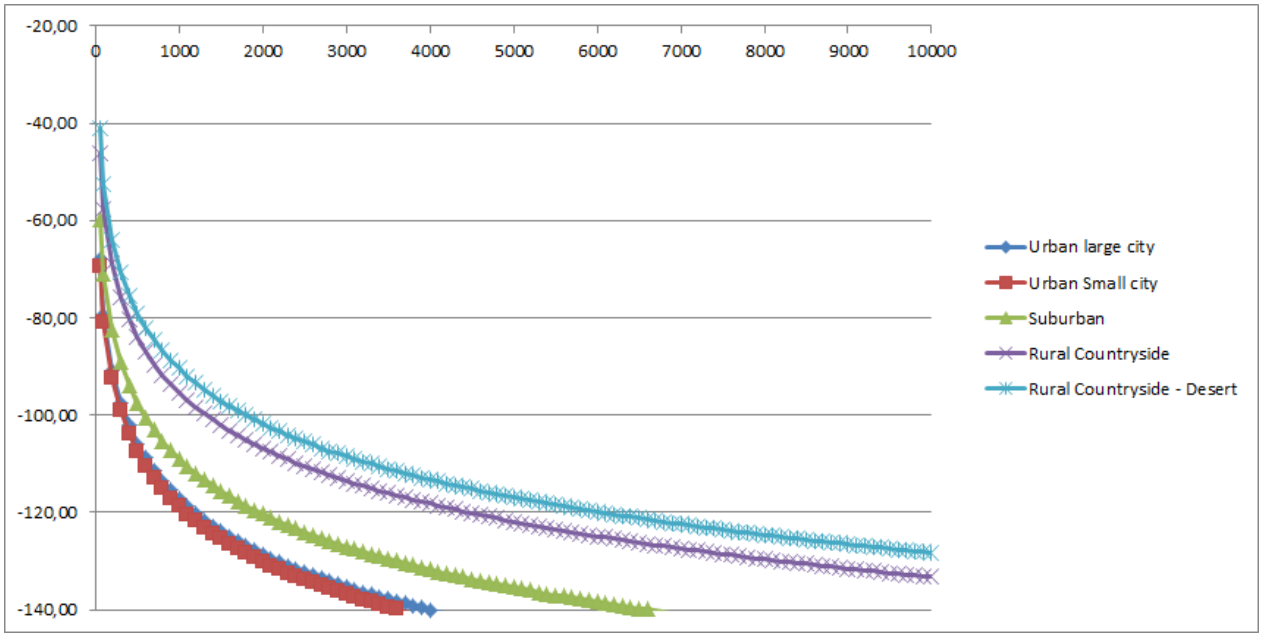

Figure 24 : Hata propagation model vs area configuration (Height = 12m)

The coverage radius of the LoRa IoT station, depending on the area type can vary from 2 km (urban areas) to 15 km (desert countryside).

7.3.7.3 Co-localization with GSM/UMTS/LTE transmitters

The LoRa IoT Station insures good co-localization other transmitters on the same site, and especially with BTS, in two ways:

- Limited spurious and noise generated in the BTS receiver bands
- Immunity to BTS transmitter

The LoRa IoT Station is obviously compliant to all EMC emissions and immunity regulations specific to very country. However, meeting these regulations is not sufficient to insure good coexistence with BTS when sharing the same site.
This is why KERLINK has reinforced these specifications to allow the coexistence.

KERLINK has designed the transmitter to reduce the spurious and the noise generated in the BTS receive bands below -80dBm in a 100KHz resolution bandwidth. This is then pretty much in line with BTS specifications to insure co-localization between BTS.
The measurements made on the LoRa IoT Station show typical values of -85dBm/100KHz.

The receiver offers also high attenuation outside the receive band.
High attenuation of out of band blockers is obtained:

- >105dB at +/-10MHz
- >150dB in BTS downlink bands

This means that the blockers levels, due to the BTS, could be up to +10dBm causing no interference with the gateway.

This document is owned by KLK and can not be distributed, used and/or reproduced without KERLINK written authorization.

Based on this performance, this means that about 50dB isolation is required between the LoRa IoT Station antenna and the base station antenna to avoid desensitization of the BTS.
Specifying a minimum distance between antennas may not guarantee the 50dB isolation, unless over specifying the required distance. This is mainly due to the fact that both LoRa antenna and BTS antenna are directive antenna. This means that the antenna gain is not omnidirectional in both cases.

BTS antenna have about 10 to 15dB antenna maximum gain but the gain above or below the antenna is reduced by 20dB to 30dB as described below:

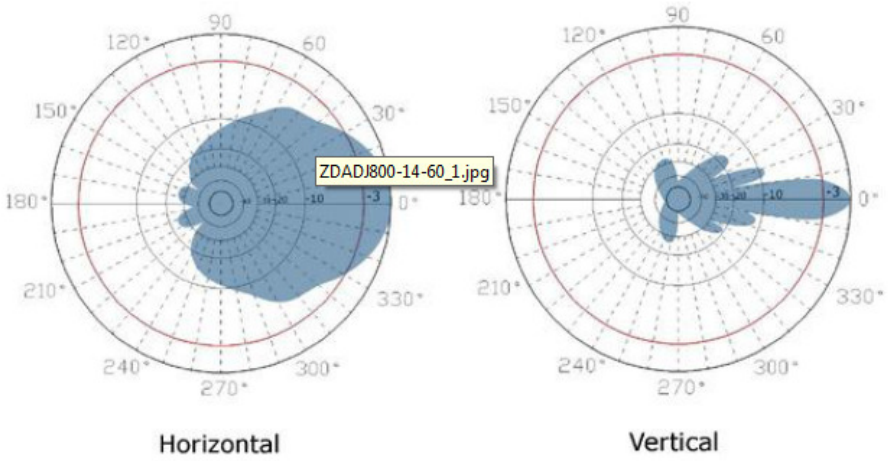

Mounting the LoRa antenna just above or below the 4G antenna allows then to get 20 to 30dB isolation among the 50dB required.

The LoRa antenna can be an omnidirectional antenna. The worst case would be a 3dBi antenna which has the "less directive" antenna pattern. An example is presented below:

Vertical Pattern
E-plane co-pol ------ 3-dB beam-width=75 Deg

Horizontal Pattern
H-plane co-pol ------ 3-dB beam-width=360 Deg

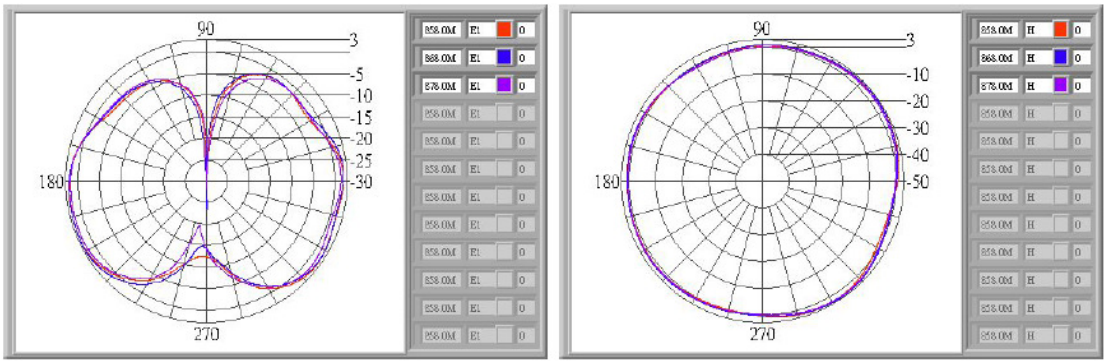

We can see that the gain on the top of the antenna or below the antenna is about -15dBi to -20dBi.

This document is owned by **KLK** and can not be distributed, used and/or reproduced without **KERLINK** written authorization.

In case of sectorial antenna, the antenna gain above or below the antenna is also significantly reduced to -10 to -15dB as shown below:

Vertical Pattern

E-plane co-pol ------ 3-dB beam-width=50Deg

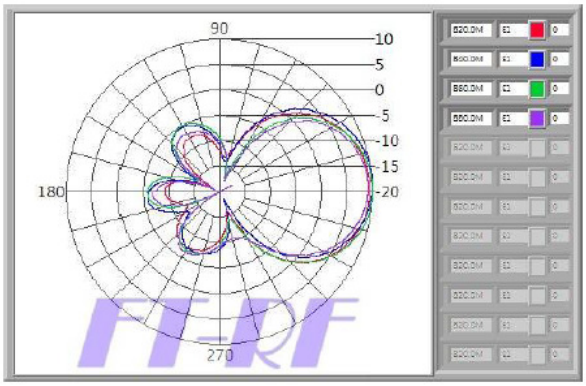

Horizontal Pattern

H-plane co-pol ------ 3-dB beam-width=55Deg

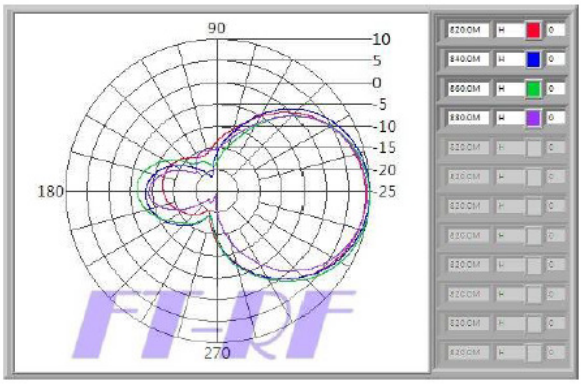

Then, taking into account the performance of the antenna, we need to get about 10 to 20dB more isolation to meet the 50dB isolation between antenna.
A gap of 1 meter between antenna would insure 30dB additional attenuation.

Therefore, our recommendation is to have the LoRa antenna just above the BTS) antenna with 1 meter gap min.
Placing the LoRa antenna below the BTS antenna could be also possible. However, this is not recommended as reception could be impacted by metallic structures in the close area.

7.3.7.3.1 LoRa IoT Station 868

Co-localization is possible with the following BTS:

- EGSM900, GSM1800, GSM1900
- UMTS900, UMTS2100
- LTE800, LTE 900, LTE 1800, LTE 2100, LTE 2300, LTE2600

The most difficult use case is the LTE 800 band that is very close to the 868MHz band. Actually, the end of the LTE 800 band is 862MHz whereas the beginning of the 868MHz band is 863MHz. Insuring -80dBm/100KHz at 862MHz while transmitting at 863MHz or even at 868Mhz is not achievable with the state of the art of SAW filters. Therefore, the LoRa IoT Station has a limited transmit frequency range of 865-873MHz. The 863-865MHz range cannot be used on transmit side. This limitation allows usage of SAW filter offering low insertion loss at 865MHz but sufficient attenuation at 862MHz. These SAW filters are designed specifically for KERLINK as standard SAW filters on the shelf do not achieve such performance. Based on these specific SAW filters and limitation of the TX frequency range (865MHz-873MHz) the LoRa IoT Station also meets the -80dBm/100KHz spurious limit in the LTE 800 band.

Co-localization is not possible with GSM850, UMTS850 and LTE850

This document is owned by KLK and can not be distributed, used and/or reproduced without KERLINK written authorization.

Note:
In India, co-localization with CDMA800 requires usage of a specific cavity filter.
Contact Kerlink for more information.

7.3.7.3.2 LoRa IoT Station 915

Co-localization is possible with the following BTS:

- GSM850, GSM1800, GSM1900
- UMTS850, UMTS1900, UMTS2100
- LTE700, LTE850, LTE1700, LTE 1800, LTE1900, LTE2600

Co-localization is not possible with GSM900, UMTS900 and LTE900.
In case of co-localization with GSM900, UMTS900 or LTE900, then LoRa IoT Station 923 is a more suitable gateway. If LoRa IoT Station 915 want to be used when co-localized with GSM900, UMTS900 or LTE900, then a specific cavity filter is required. Contact Kerlink for more information.

7.3.7.3.3 LoRa IoT Station 923

Co-localization is possible with the following BTS:

- GSM850, GSM900, GSM1800, GSM1900
- UMTS850, UMTS900, UMTS2100
- LTE700, LTE800, LTE850, LTE 900, LTE 1800, LTE 2100, LTE 2300, LTE2500, LTE2600

Co-localization is not possible with EGSM900, only GSM900.

Note:
In Singapore, co-localization with EGSM900 requires usage of a specific cavity filter.
Contact Kerlink for more information.

7.3.7.4 Fresnel ellipsoid

Radio waves generally travel in a straight line from the emitter to the receiver. This is obviously true when there are no obstacles between the transmitter and the receiver. However, there are, most of the time, some obstacles between the transmitter and the receiver. Then, the radio waves bump into the obstacles and are reflected or diffracted with dephasing. These diffracted waves when arriving on the receiver can cause phase cancelling with the straight line signals reducing the received power (fading). The fading effect depends on the distance between the receiver and the emitter, the nature of the obstacles and the associated out of phase.

This document is owned by KLK and can not be distributed, used and/or reproduced without KERLINK written authorization.

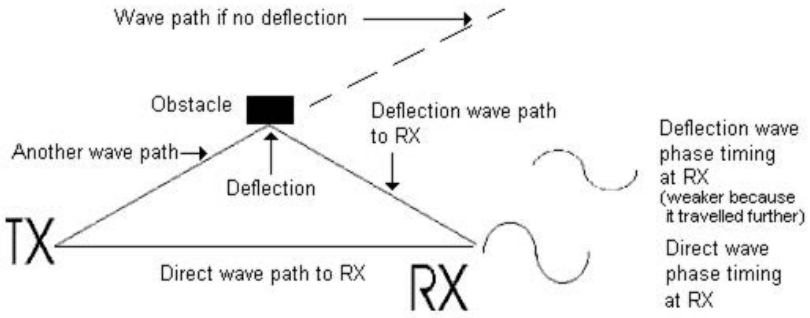

Figure 25 : Fading effects due to obstacles

To minimize the fading effects, obstacles in a "Fresnel ellipsoid" must be avoided.
The Fresnel ellipsoid is a theoretical ellipsoid located between the transmitter and the receiver.
The radius of the ellipsoid is defined as follows:

Where:

- d1 = distance from Tx antenna
- d2 = distance from Rx antenna
- f = frequency
- c = celerity (3E8 m/s)
- r1 = radius at the distance d1

A global rule is that 60% of the Fresnel ellipsoid must be clear of obstacles.
In case of buildings between the end point and the LoRa IoT station, the antenna height must be adjusted to make sure the building is not close to 60% of r1.

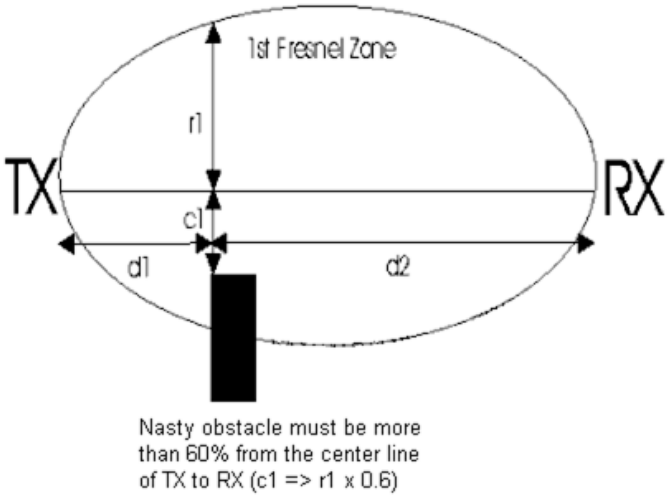

Figure 26 : Fresnel ellipsoid clearance

Be careful, if the antennas heights are not sufficient, then the ground (earth curve) can get inside the Fresnel ellipsoid and overrule the 60% criteria.

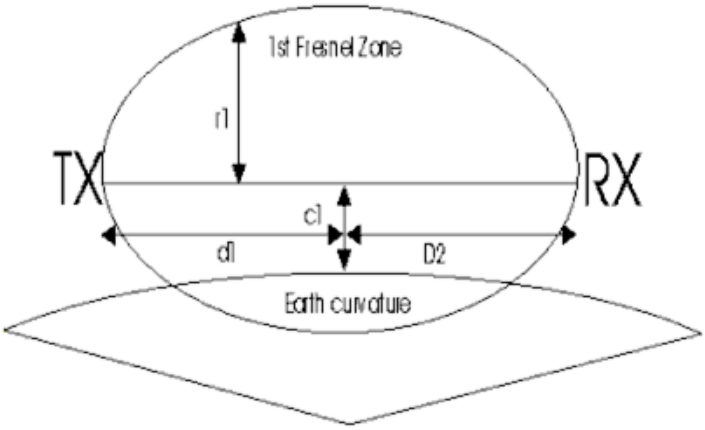

Figure 27 : Fresnel ellipsoid and earth curvature

Example:
An end point is located at 3500m from the LoRa IoT Station.
The LoRa IoT Station is installed on the roof of a building. The building roof is 30 meters long vs 20m large.
What is the required height of the LoRa antenna for have an optimized reception?

Answer:
If we want to receive end points i.e. 360° area coverage, it should be better to have the antenna located in the mid of the building root.
The antenna is therefore at 15m from the edge of the roof.

Then we have:

- d1 = 15m
- d2 = 3600 -15 = 3585m
- f = 868MHz
- c = 3E8 m/s

So, r1 = 2.3m
The antenna must be installed at a minimum height of 2.3m from the roof top, on a mast for instance.

7.4 Setting connections

7.4.1 Ethernet connection

Before connecting the Ethernet wires, ensure that the POE injector is not connected to 230VAC.
The Ethernet wires must be connected as described in §7.2.1.

7.4.2 LoRa RF Antenna connection

LoRa IoT Station 868 is delivered with a 868MHz antenna.

This document is owned by KLK and can not be distributed, used and/or reproduced without KERLINK written authorization.

Frequency	868 MHz
Impedance	50 ohm
Electrical length	1/2 λ
V.S.W.R.	< 1,3:1
Polarization	Vertical
Gain	3 dBi
Max power in	50 watt
DC Ground	Yes
Whip material	Fiberglass
Connector	N Female
Length	0,3 m
Weight	75 g
IP Code	IP66K
Transport	EN 300 019 Part 1-2 Class 2.3
Waterproofness	IEC 60529 - IP 67
Shock resistance	IK08
UV resistant	UL508
Salt Fog	EN 60068-2-52, severity one

Figure 28 : Technical antenna 868 specifications

LoRa IoT Station 915 and 923 are delivered with a 915MHz antenna.

Frequency	915 MHz
Impedance	50 ohm
Electrical length	Collinear
V.S.W.R.	< 1,2:1
Polarization	Vertical
Gain	6 dBi
Max power in	50 watt
DC Ground	No
Whip material	Fiberglass
Connector	N Female
Length	1,0 m
Weight	380 g
IP Code	IP66K
Transport	EN 300 019 Part 1-2 Class 2.3
Waterproofness	IEC 60529 - IP 67
Shock resistance	IK08
UV resistant	UL508
Salt Fog	EN 60068-2-52, severity one

Figure 29 : Technical antenna 915 specifications

First, tighten the universal antenna support on the enclosure support using provided screw and nut.
Next, tighten the antenna on the mounting set:

This document is owned by KLK and can not be distributed, used and/or reproduced without KERLINK written authorization.

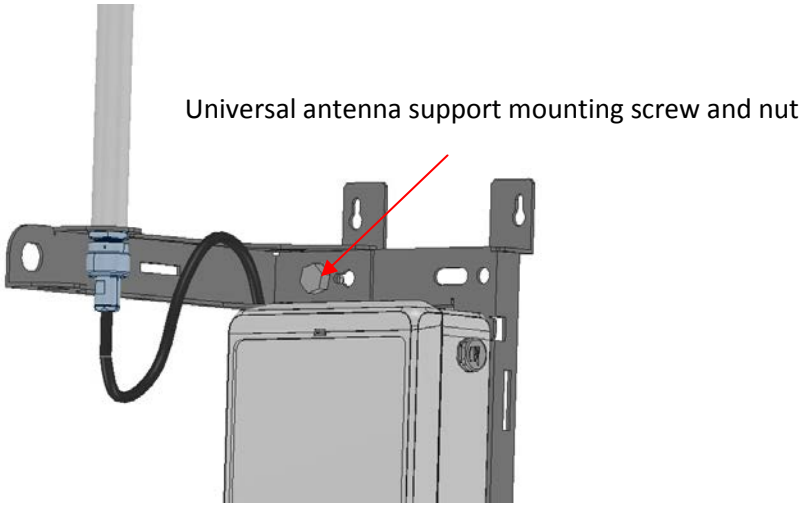

Figure 30 : attachment of the antenna on the mounting set

Once the RF antenna is fixed, connect the N connector of the antenna cable on the connector based on the bottom of the casing as described on the figure below.

For safety reason, the power supply of the product must be disconnected before plugging the N connector.

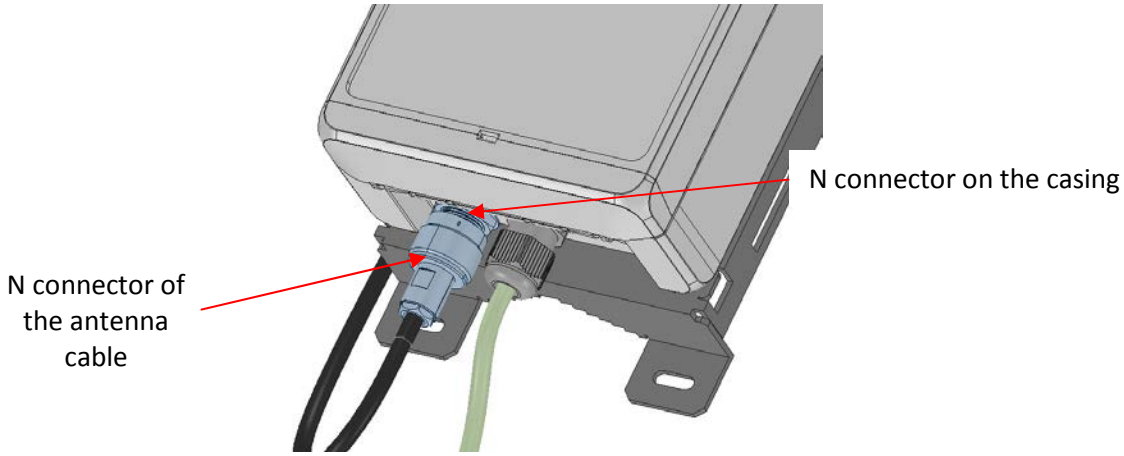

Figure 31 : connection of LoRa RF antenna (bottom view)

To improve the durability of the RF connections against environmental aggression (moisture, pollution, …), Kerlink recommends to protect connectors with an insulating tape like the reference 130C from 3M.

To tighten the antenna cable, it is possible to tighten it with cable clamp, using spaces provided for this purpose:

This document is owned by KLK and can not be distributed, used and/or reproduced without KERLINK written authorization.

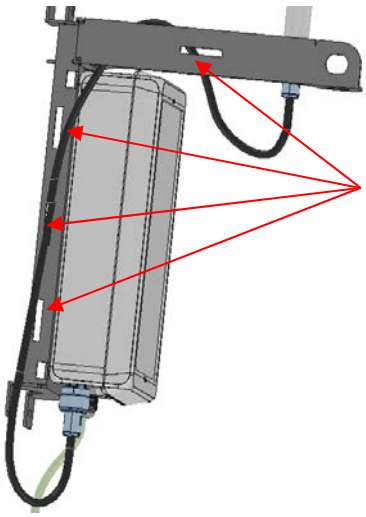

Figure 32 : attachment of the RF antenna cable

It is possible to order other antennas as an option. Kerlink proposes antennas with gain from 3dBi to 16dBi. For more details, contact Kerlink at support@kerlink.fr.

This document is owned by KLK and can not be distributed, used and/or reproduced without KERLINK written authorization.

7.5 Commissioning

7.5.1 SIM card

The SIM card is mandatory to establish the 3G/GPRS communications.

Before inserting the SIM card, pay attention that the LoRa IoT Station is unpowered by checking the 2 LEDs PWR are OFF.

Then, to insert a SIM card in the Access Point:

- Open the LoRa IoT Station casing
- Open the internal door of the cabinet
- Then, you can remove the SIM card holder of the Lora IoT Station by pressing with a little screwdriver, the extraction button (as shown below)
- Place the SIM card in the SIM card holder
- Insert carefully the SIM card holder with the SIM card in the LoRa IoT Station

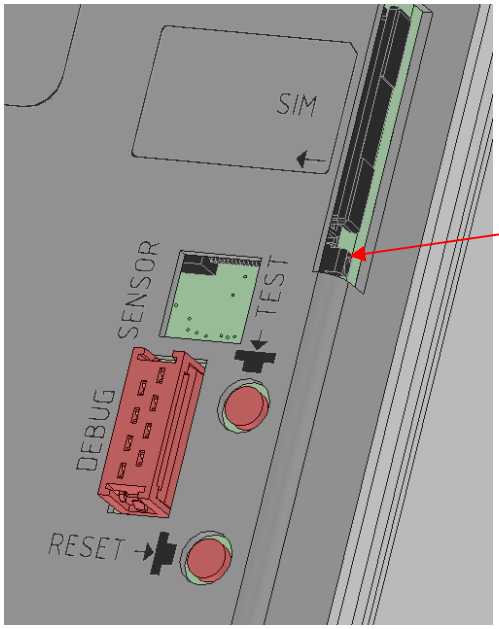

Figure 33 : SIM Card

In case of replacement of the SIM card, the power supply must be firstly switched off by disconnecting Ethernet wires or disconnecting the POE injector. For few seconds, the LoRa IoT Station is still powered-on due to the internal backup battery. Wait and check the 2 LEDs PWR are switched off before extract the SIM card.
After inserting the new SIM card as described above, the Lora IoT Station can be re-powered on.

In case of change of mobile operator, APN and login/password must be updated. For more details, contact Kerlink at support@kerlink.fr.

This document is owned by KLK and can not be distributed, used and/or reproduced without KERLINK written authorization.

7.5.2 Power on

Once the RF antenna and the Ethernet wires are connected and the SIM card is inserted, the Lora IoT Station can be powered on.
To POWER ON the LoRa IoT Station, connect the POE injector on the 230VAC main power supply.

7.5.3 Functional check

To ensure the LoRa IoT Station is started up, check the 2 PWR LEDS: they should be switched ON. After some seconds, the LEDs switch off.

Then, to check and analyse the status of the LoRa IoT Station, the TEST button must be pressed briefly in order to activate the LEDs functionality during 1 minute. This operation can be repeated indefinitely.

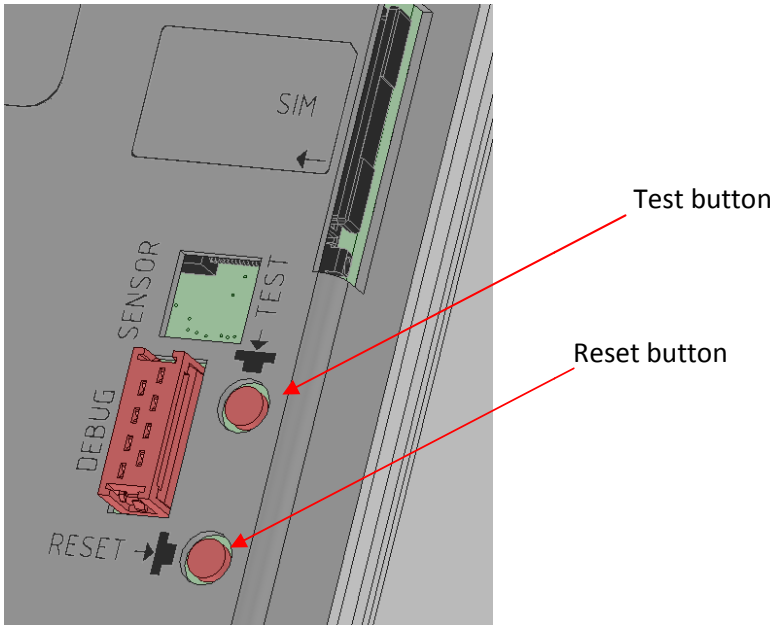

Figure 34 : Test and Reset buttons

Status of the Lora IoT Station:

Name	Color	Mode	Details
PWR (Station)	Green	Continuous	Station power indicator
PWR (Modem)	Green	Continuous	Modem power indicator
GSM1	Green	Continuous	GSM quality level Most Significant Bit
GSM2	Green	Continuous	GSM quality level Least Significant Bit

This document is owned by **KLK** and can not be distributed, used and/or reproduced without **KERLINK** written authorization.

WAN quality level :

GSM1	GSM2	Status
0	0	SIM Card error
0	1	No network connection
1	0	RSSI Level < 17
1	1	RSSI Level >18

The behaviour of the other LEDs depends on the application software downloaded in the LoRa IoT Station. Only Station LEDS (WAN, MOD1 and MOD2) can be controlled by the application.

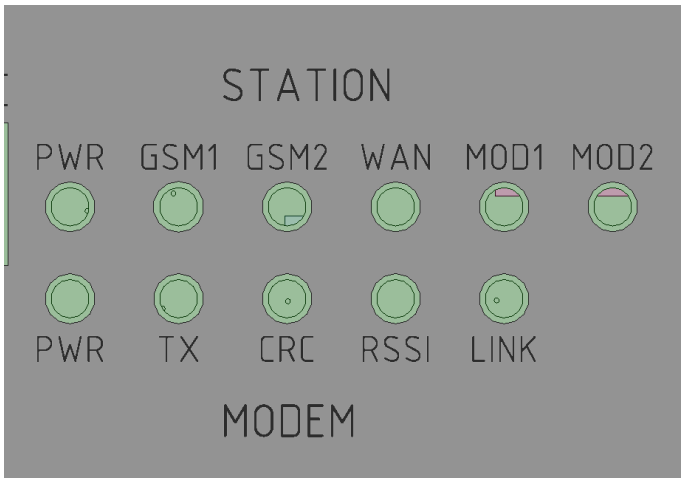

Figure 35 : LEDs indicators

This document is owned by KLK and can not be distributed, used and/or reproduced without KERLINK written authorization.

7.6 Lightning protections

In harsh environment, additional protections may be used to improve lightning immunity.

7.6.1 Antenna link

For the antenna link, Kerlink recommends the P8AX series from CITEL.
Protections must be installed in accordance to its own specifications.

7.6.2 Ethernet link

For the Ethernet link, Kerlink recommends the CITEL MJ8-POE-B reference from CITEL.
Protections must be installed in accordance to its own specifications.

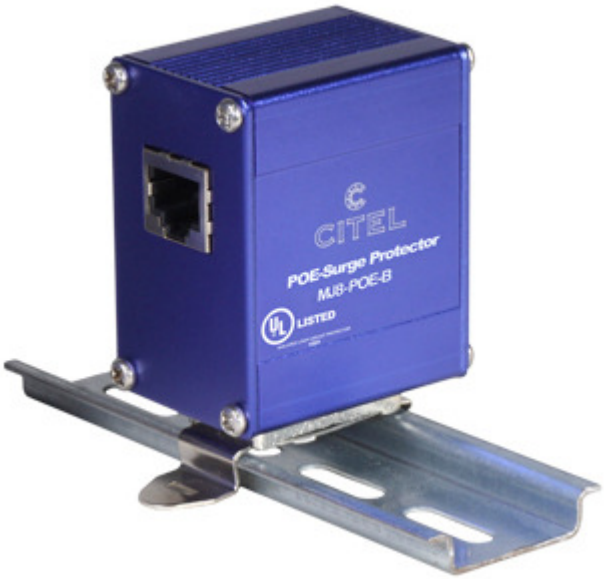

This document is owned by **KLK** and can not be distributed, used and/or reproduced without **KERLINK** written authorization.

8 Maintenance of the Access point

8.1 Simple checks

8.1.1 LoRa IoT Station enclosure

Check the robustness of the installation:

- Screwing of the LoRa IoT Station on the mounting set
- Screwing of the mounting set (depends on the configuration)

Check the Ingress Protection of the enclosure:

- No trace of water inside the enclosure
- Tightening of the cable gland
- Tightening of the pressure stabiliser
- PU gasket on the door

8.1.2 Cables

Check:

- The LoRa RF antenna N connectors are well screwed and tightened on the casing and on the mounting set.
- Screwing of Ethernet wires
- Ensure that the POE injector is correctly installed (RJ45 and power supply cable).

8.1.3 LED

Make sure the LoRa IoT Station is working properly according to LEDs indications
See §7.5.3.

8.2 Interfaces for debug or maintenance purposes

8.2.1 Proprietary debug interface

The LoRa IOT Station has a proprietary debug interface:

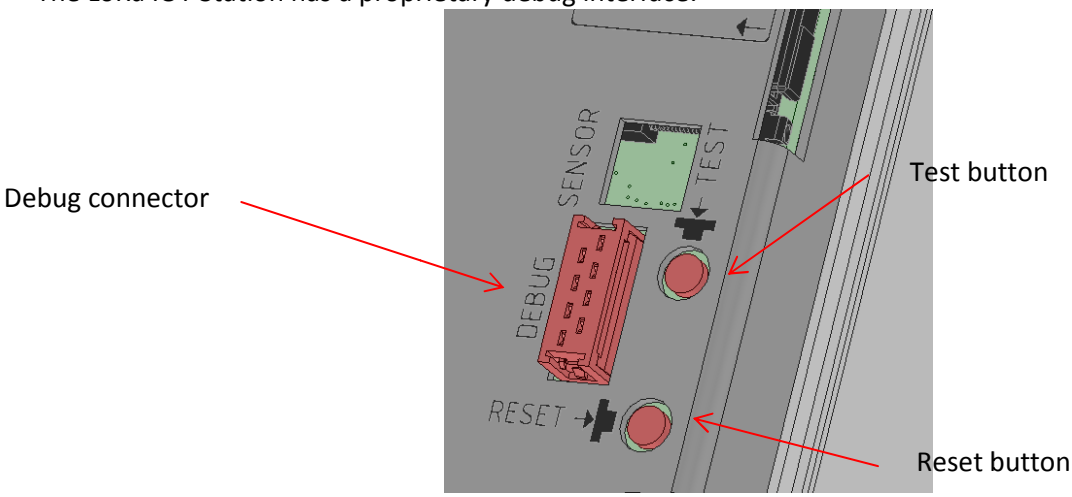

Figure 36 : Proprietary debug interface of the LoRa IoT Station

This document is owned by KLK and can not be distributed, used and/or reproduced without KERLINK written authorization.

This debug interface is intended to be used by authorized and qualified personnel only.
Be careful: Only specific equipment developed by Kerlink must be connected to this interface.

It is also possible to access to the debug interface by Ethernet connection by connecting directly to the POE injector or the Ethernet switch (depending on the installation topology).

8.2.2 USB and Ethernet interface

Firmware update can be performed with a USB key via the USB type A connector below:

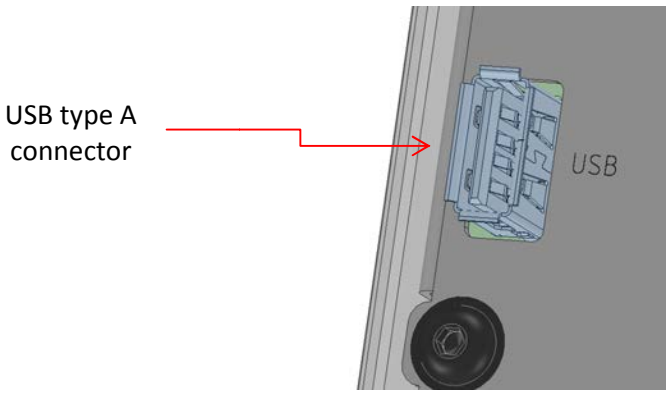

Figure 37 : USB connector of the LoRa IoT Station

8.2.3 TEST and RESET buttons

Test and reset button are small buttons present on the top side as shown in Figure 36.

RESET button is intended to reinitialize the LoRa IOT Station.

TEST button has 2 functions:

- Short Press : LEDs functionality is activated during 1 minute
- Long Press : Activation of an auto-test sequence defined by the application software

9 Kerlink support

The LoRa IoT Station must be installed and maintained by authorized and qualified personnel only.
In case of defect or breakdown, make sure the above recommendations detailed in this document are met.
If an issue is not addressed in this document, contact Kerlink at support@kerlink.fr.

This document is owned by KLK and can not be distributed, used and/or reproduced without KERLINK written authorization.

* * *

End of document

This document is owned by **KLK** and can not be distributed, used and/or reproduced without **KERLINK** written authorization.