spigen	Design Specification History	Ristricted Document	Writer	Check	Supervisior	Check
			Taeheon Kim		KOO	

Model	S310WCK	Division	(●)Modification (○)MP	Designer	Taeheon Kim		
Category	Home Product	Team	Spigen Korea Digital Product Development Team	Engineer	CHOI	Receiver	PowerQi

A3 Size

Version No.	Date	Reason of change
Rev.00	2024.02.29	Write Specification
Rev.01	2024.03.29	Update Specification
Rev.02	2024.04.02	Update Specification (Add Silicone Pad, Change Cable Image)
Rev.03	2024.04.03	Update Specification (Stand, Moving Hinge, Fix Hinge Part update)
Rev.04	2024.04.18	Update Specification (Silk Print Update)
Rev.05	2024.04.22	Update Specification (Add Cable Holder)
Rev.06	2024.06.14	Update Specification (Design Update)
Rev.07	2024.08.06	Update Specification (Stand, Silk Print)
Rev.08	2024.09.19	Update Specification (3.Back Silk Print)
Rev.09	2024.11.26	Update Specification (Silk Print)
Rev.10		
Rev.11		
Rev.12		
Rev.13		
Rev.14		
Rev.15		
Rev.16		
Rev.17		

Design Specification

Ristricted Document

Writer	Check	Supervisior	Check
Taeheon Kim		KOO	

Model	S310WCK	Division	(●)Modification (○)MP	Designer	Taeheon Kim		
Category	Home Product	Team	Spigen Korea Digital Product Development Team	Engineer	CHOI	Receiver	PowerQi

A3 Size

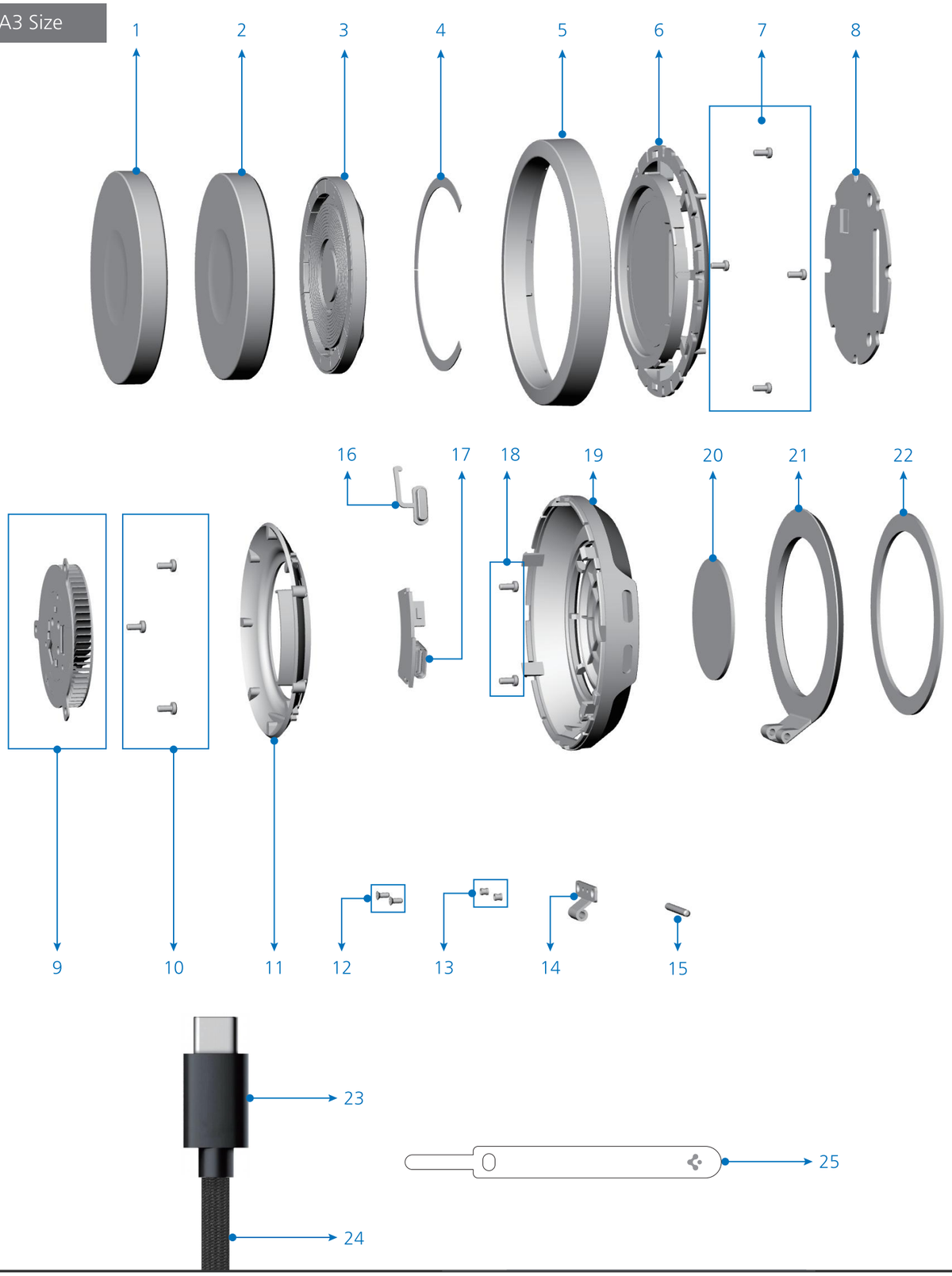

No	Part Name	Material	Color	Finishing	Note
1	Front - Silicone	Silicone	Black	Silk Specification	Silk Print / Silicone Coating / Double Injection
2	Front - PC	PC	Black	-	
3	Qi2 Module	MZ99	Black	-	-
4	3M Pad	3M™ VHB 5909		-	-
5	Middle	PC	Black	Etching Specification	-
6	Middle Inner	AL	Black	Anodizing	-
7	Middle Screw	Metal	-	-	4ea
8	PCBA	-	-	-	-
9	Fan	Metal	Black	-	Common Part (ITS12WC)
10	Fan Screw	Metal	-	-	3ea
11	Back Inner	PC	White	Black Spray	Front side Masking
12	Hinge Screw	Metal	-	-	2ea
13	Hinge Nut Insert	Metal	-	-	2ea / Insert Injection
14	Fix Hinge	SK7	Black	Plating	-
15	Hinge Pin	SK7	-	-	-
16	Button	PC	Black	Etching Specification Silk Specitication	-
17	USB PCBA	-	-	-	USB Type C
18	USB PCB Screw	Metal	-	-	2ea
19	Back - PC	PC	Black	Etching Specification Silk Specitication	-
20	Back - Silicone	Silicone	Black	Silk Specification	Silicone Coating
21	Stand	Zn	Black	Plating	-
22	Stand Silicone	Silicone	Black	-	Silicone Coating
23	C to C Cable case	PVC	Black	Etching Specification	Refer to Sample
24	C to C Cable	Polyester Yam	Black	Matt	2M, Refer to Sample
25	Velcro Cable Organizer	-	Black	Silk Print	Refer to Sample (PF2100)

Etching Specification

Ristricted Document

Writer	Check	Supervisior	Check
Taeheon Kim		KOO	

Model	S310WCK	Division	(●)Modification (○)MP	Designer	Taeheon Kim		
Category	Home Product	Team	Spigen Korea Digital Product Development Team	Engineer	CHOI	Receiver	PowerQi

A3 Size

1. Middle

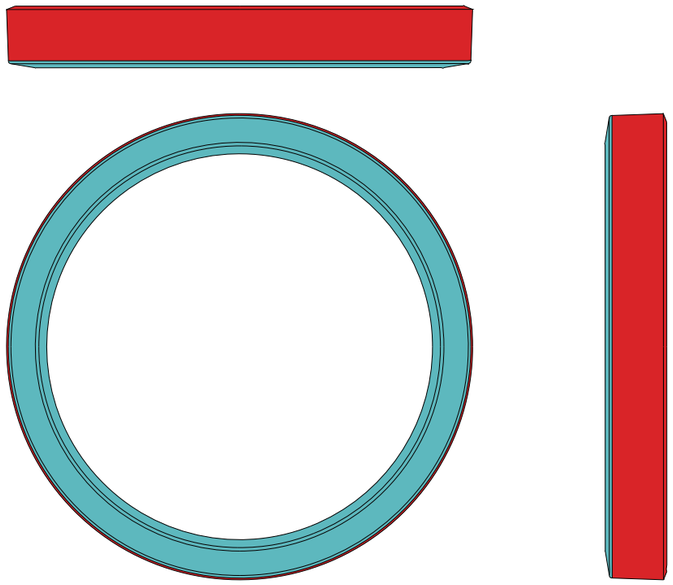

2. Back

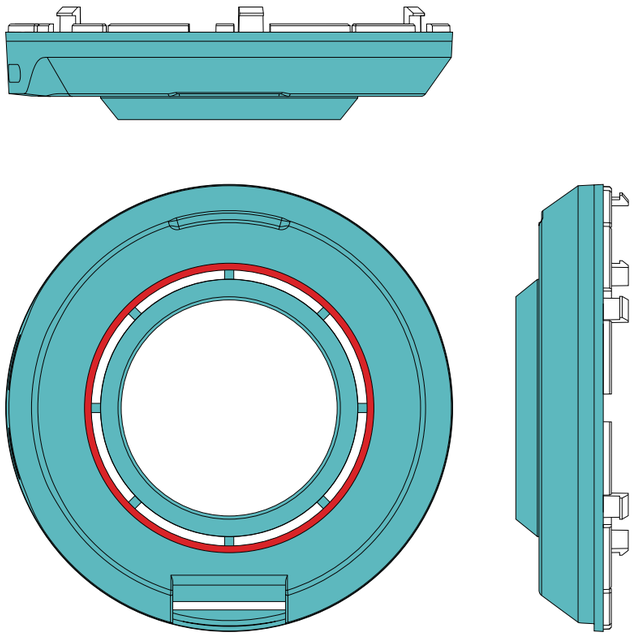

3. Button

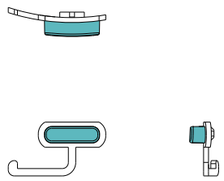

Scale 100%

No	Part Name	Color	내용	Note
1	Middle		Glossy Etching (VDI#27)	
2	Back		Glossy Etching (VDI#27)	
3	Button		Etching (VDI#27)	

Stick / Print Specification

Ristricted Document

Writer	Check	Supervisior	Check
Taeheon Kim		KOO	

Model	S310WCK	Division	(●)Modification (○)MP	Designer	Taeheon Kim		
Category	Home Product	Team	Spigen Korea Digital Product Development Team	Engineer	CHOI	Receiver	PowerQi

A3 Size

1. Front Silk

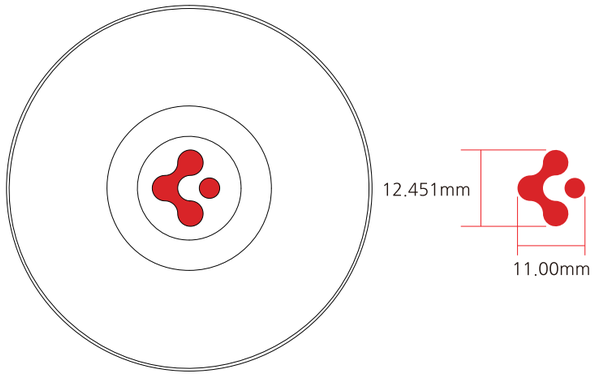

2. Back Silk

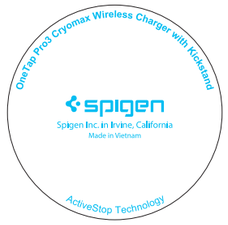

3. Back Silk

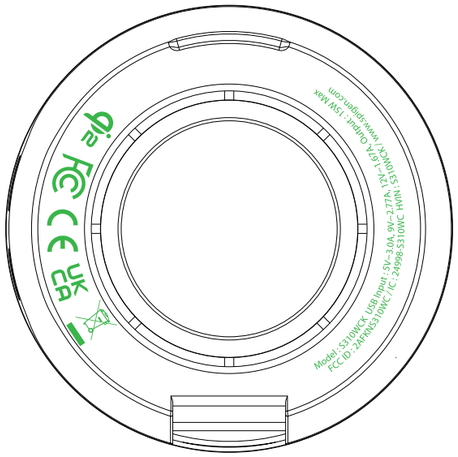

Scale 100%

No	Part Name	Color	내용	Note
1	Front - Silicone		Glossy Clear	
2	Back- Silicone		Glossy Clear	
3	Back - PC		Glossy Clear	
4	Protective Vinyl		Protective Vinyl	
5	Power Quality Sticker		Cutting Line Guide Sticker	
6	Velcro Cable Organizer		Pantone Solid Coated Cool gray 7C	
7				
8				

Stick / Print Specification

Ristricted Document

Writer	Check	Supervisior	Check
Taeheon Kim		KOO	

Model	S310WCK	Division	(●)Modification (○)MP	Designer	Taeheon Kim		
Category	Home Product	Team	Spigen Korea Digital Product Development Team	Engineer	CHOI	Receiver	PowerQi

A3 Size

4. Protective Vinyl

5. Power Quality Sticker

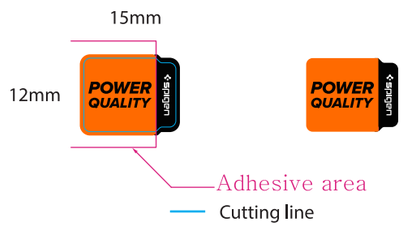

3ST077810

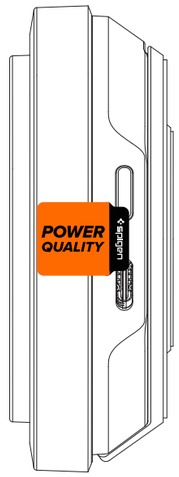

6. Velcro Cable Organizer

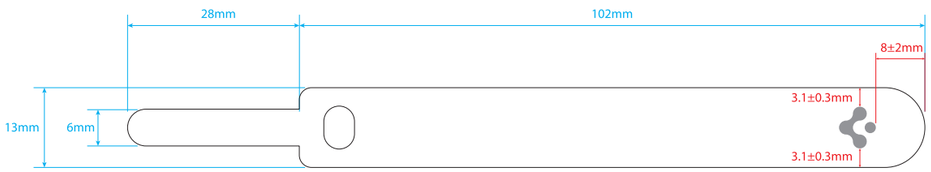

Front (Magic Hook)

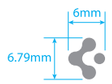

Back (Nylon Loop)

Scale 100%

No	Part Name	Color	내용	Note
1	Front - Silicone		Glossy Clear	
2	Back- Silicone		Glossy Clear	
3	Back - PC		Glossy Clear	
4	Protective Vinyl		Protective Vinyl	
5	Power Quality Sticker		Cutting Line Guide Sticker	
6	Velcro Cable Organizer		Pantone Solid Coated Cool gray 7C	
7				
8				