*The IP of this drawing belongs to **HAMATON**. Any people or company must not copy this drawing. Any manufactures on the basis of this drawing without HAMATON's agree are not allowed.*
Address:12 East Zhenxing Road,Linping, Yuhang,Hangzhou,Zhejiang,China

Marks	Location	ECR No.	Description	Staff	Date
A1 / 1					

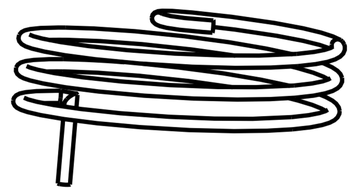

A-A
5:1

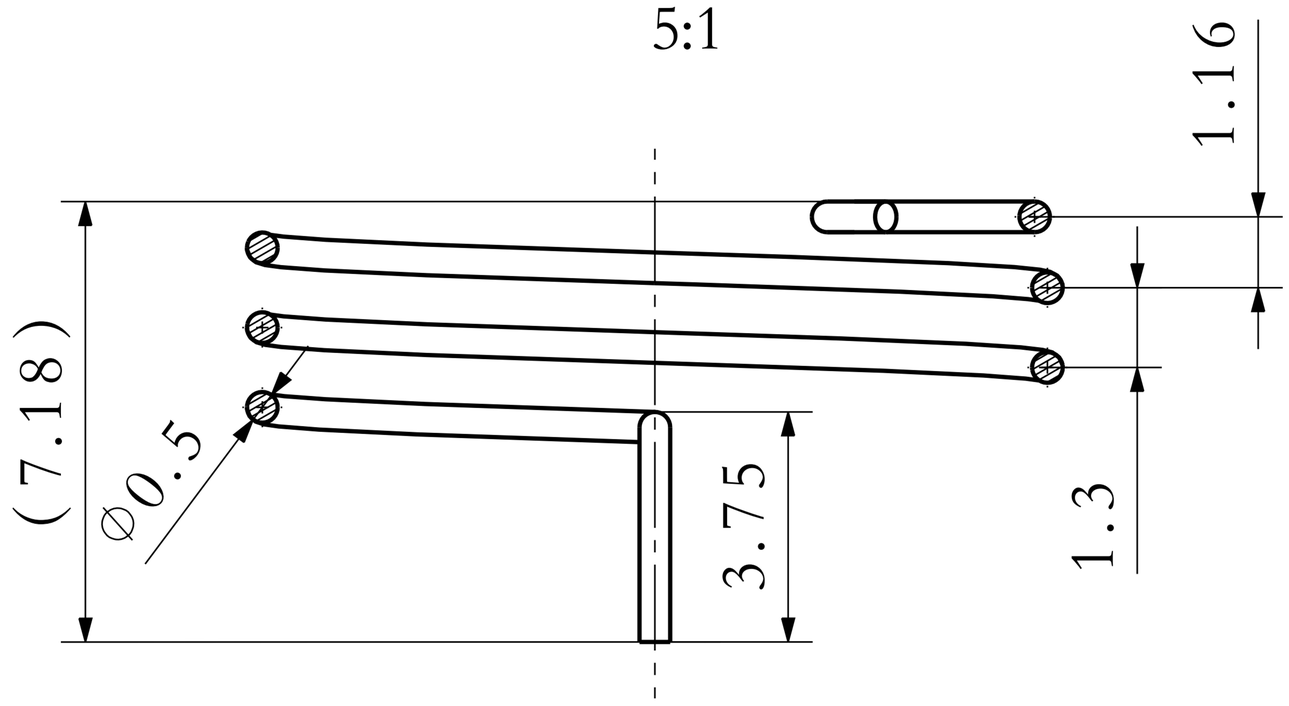

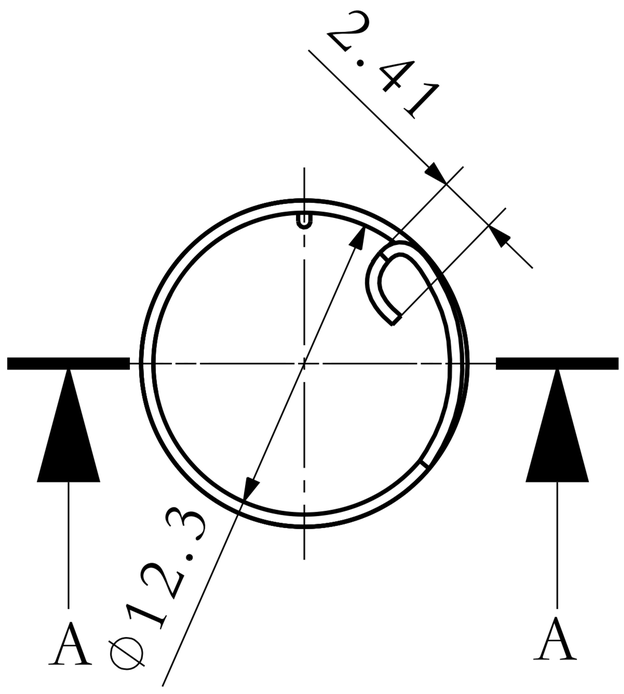

Operating frequency	433.92MHz
Antenna Type	Metal Antenna
Antenna Gain	1.2dBi

No.	Name	Part No.	Material	QTY	Weight	Notes
		A-604				

Bill Of Materials

Approve	
Audit	
Check	
Design	

Hamaton Hamaton Automotive Technology

M.	WT.	Scale		Antenna Gain:1.2dBi
C7701		2:1	No.	
Projection	PAGE			
	第1页，共1页		CUS. No.	