*The IP of this drawing belongs to **HAMATON**. Any people or company must not copy this drawing. Any manufactures on the basis of this drawing without HAMATON's agree are not allowed.*
Address:12 East Zhenxing Road,Linping, Yuhang,Hangzhou,Zhejiang,China

| Marks | Location | ECR No. | Description | Staff | Date |
|---|---|---|---|---|---|
| A1 / 1 | | | | | |
| | | | | | |
| | | | | | |

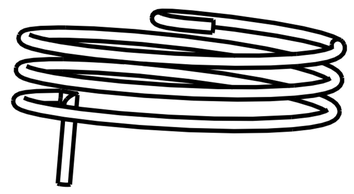

A-A
5:1

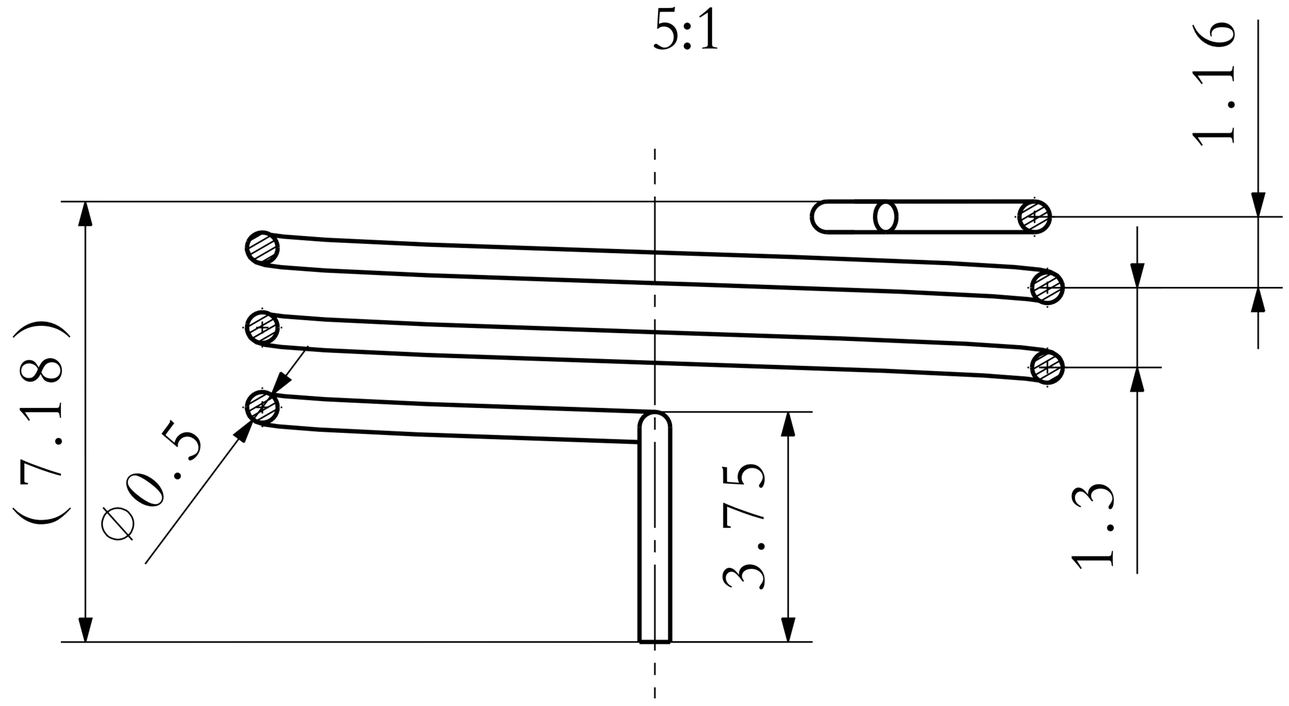


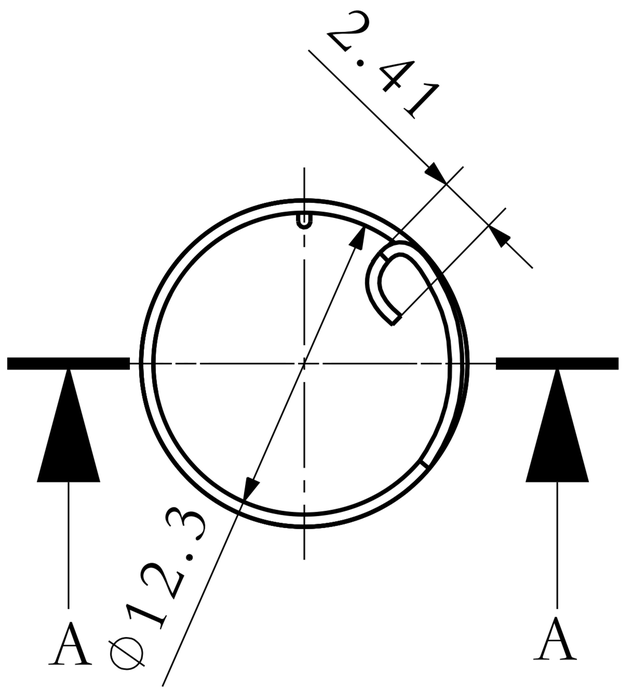


| No. | Name | Part No. | Material | QTY | Weight | Notes |
|---|---|---|---|---|---|---|
| | | A-604 | | | | |
| | | | | | | |
| | | | | | | |

Bill Of Materials

| | |
|---|---|
| Approve | |
| | |
| Audit | |
| Check | |
| Design | |

**Hamaton** Hamaton Automotive Technology

| M. | WT. | Scale |
|---|---|---|
| C7701 | | 2:1 |
| Projection | PAGE | |
| | 第1页，共1页 | |

Antenna Gain:1.2dBi

No.

CUS. No.