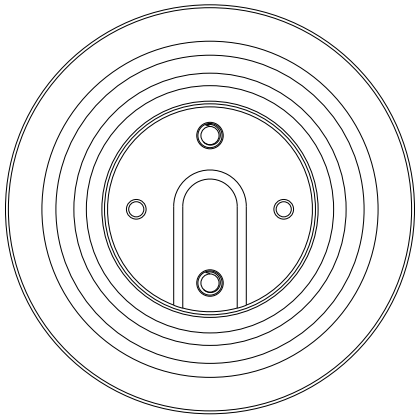

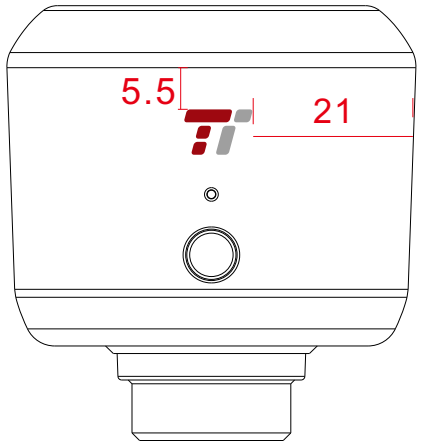

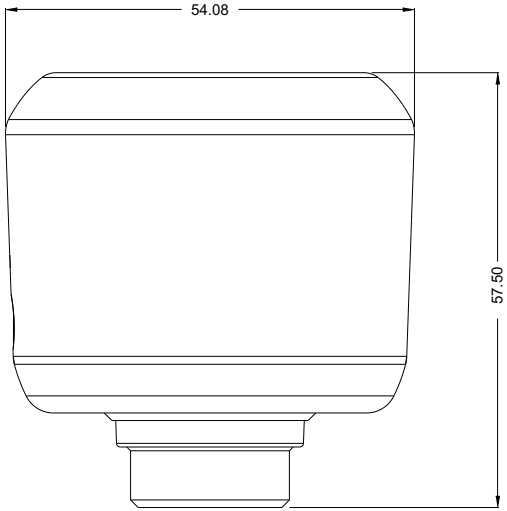

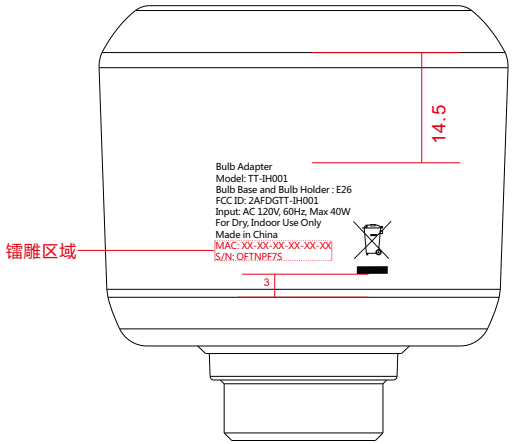

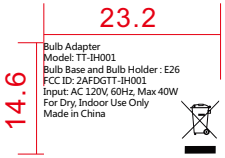

Pantone Cool gray6C