SQFX01K03-1WT产品说明卡
Starter Kit Post Card

2919204703C

396mm

296mm

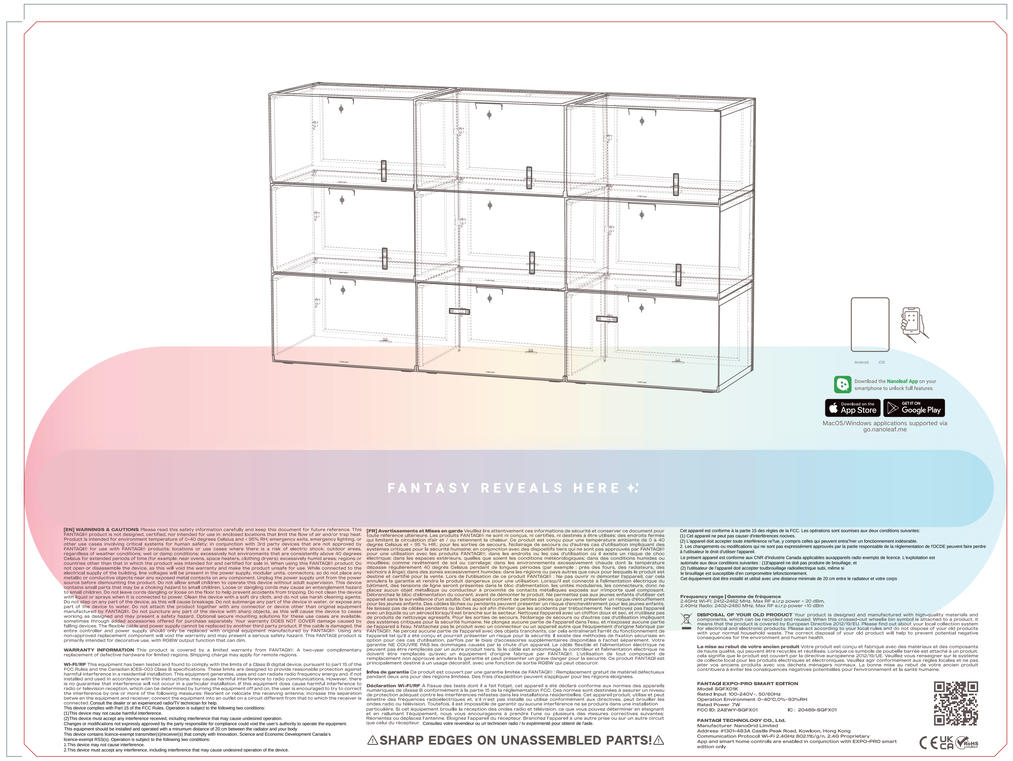

396mm
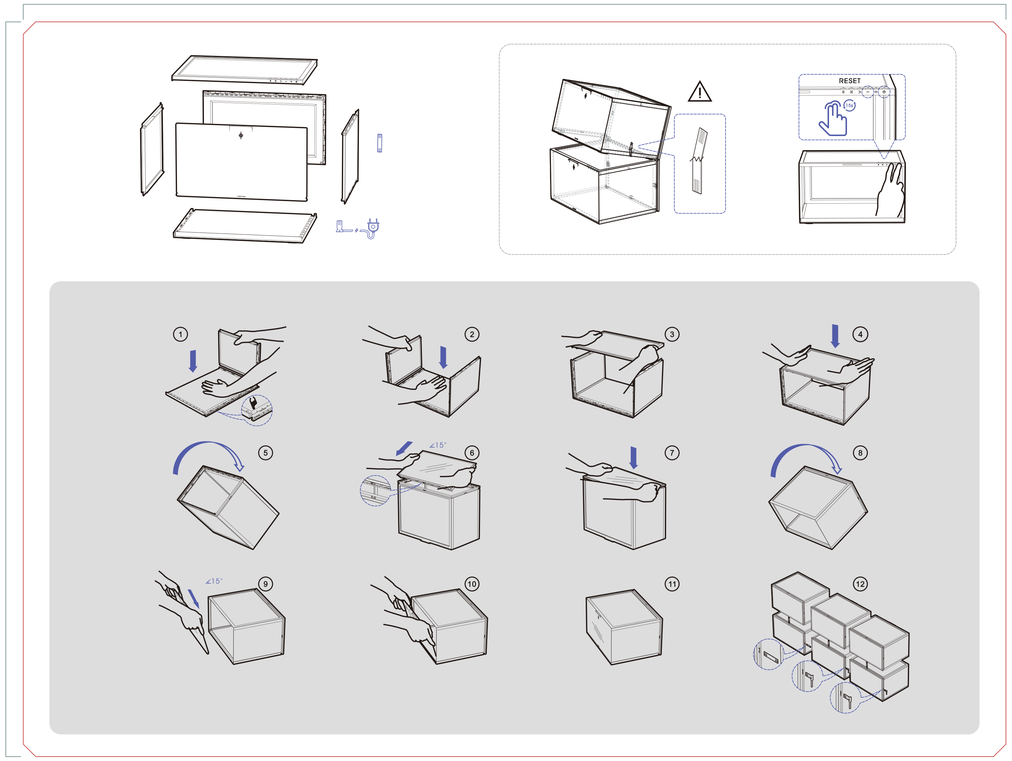
296mm