Part A: RF frequency transmitting part. Vi8855B is a 433.92MHz FM transmitter chip. The working frequency of Vi8855B is set to 13.560mhz. When the master MCU CM8M021A sends the protocol to VI8855B through the data pin according to the key value, and then sends the RF signal through the high frequency matching circuit. The maximum field strength is 76dBuV/m @3m.

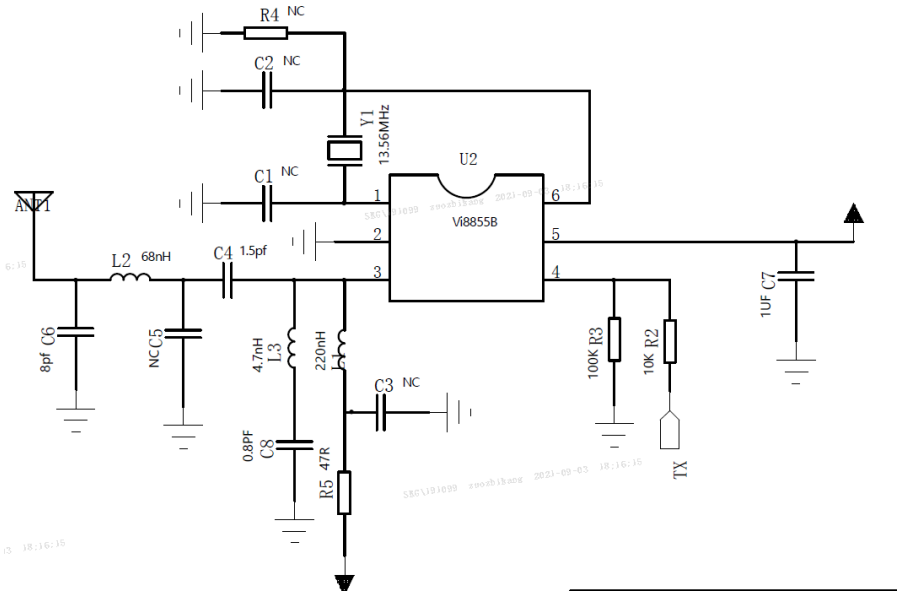

Part B: Key recognition part When a key is pressed, the MCU port level will change accordingly, and the master MCU will identify the corresponding key according to the corresponding port level change.
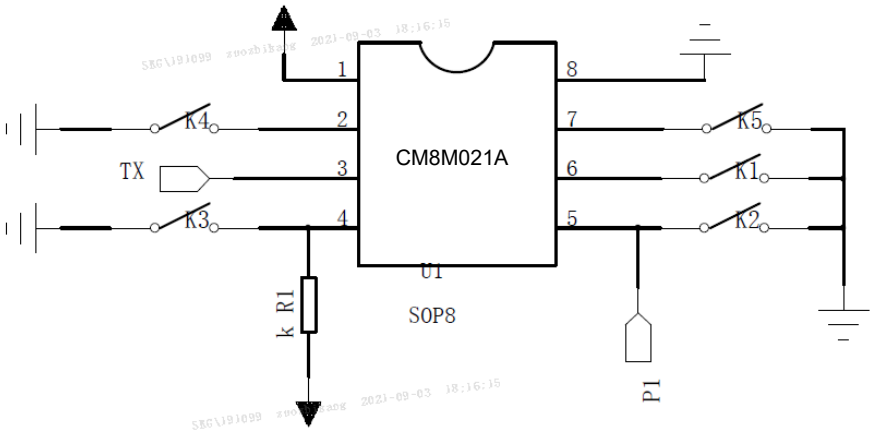
Part C: Main control chip part The main control MCU CM8M021A will enter the sleep mode when no key is generated, so as to achieve the power saving effect. When a key is pressed, the MCU will wake up immediately, recognize the corresponding key value, send RF command protocol, and display the indicator light. When the key is released, the indicator light will not display and enter the sleep state.