REV.LTR	DATE	UPDATE DESCRIPTION	REMARK	SIGN	APPROVER
△					

(Note)

1.Material:50μ Top-coated Polyester Film,Thickness:0.050+/-0.005mm
Glue Type:Label with Depressive Liner, Thickness:0.021+/-0.003mm
材質:50番壓花底白色特多龍商標紙(厚度0.050+/-0.005mm)+格子膠(厚度0.021+/-0.003mm)

2.Dimension:L77.3*W25 mm, R2.2mm*2

3.Printing Color:Black [Fixed wording: Black C / printing wording (for factory)：B075 (no pantone)]
文字印刷:黑色 [固定字元：Black C / 變動字元(工廠列印)：B075 (no pantone)]

4.The material are compliant with the limits of ROHS Directive 2002/95/EC and its subsequent amendments.

5.Font:Arial 6. Other：UL-PGJI2 / 需排廢

Roll direction
卷紙方向

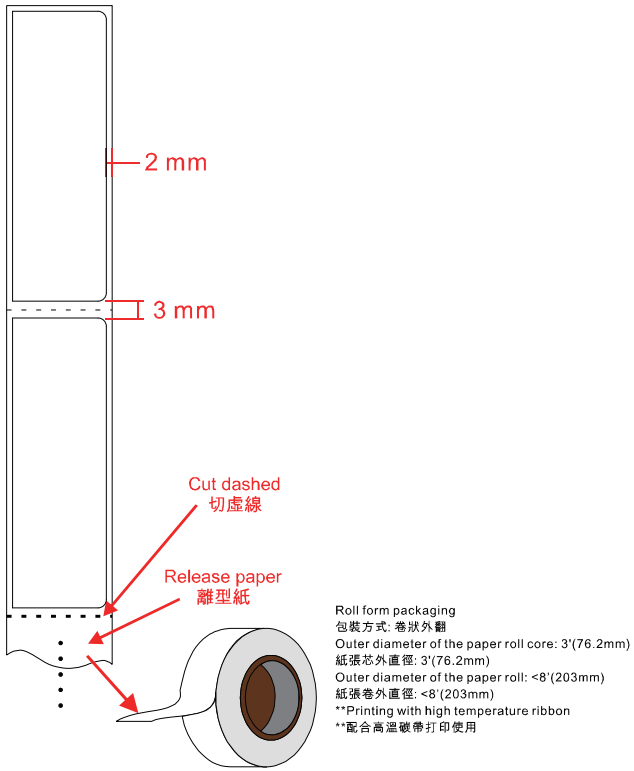

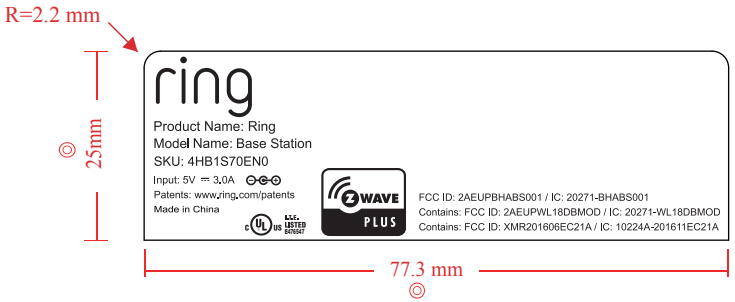

SCALE 1:1

Printing Content for supplier
供應商印刷內容

Printing color:Black C

Black C

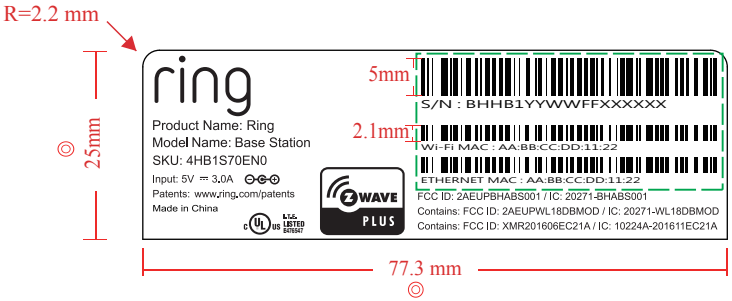

Printing position for factory
工廠印刷位置

Printing color:B075 (no pantone)

MATERIAL STRUCTURE

Material Made

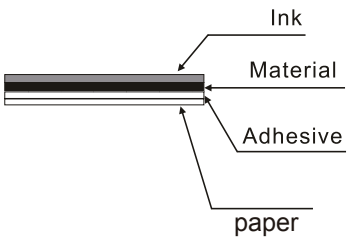

REMARK

1. ◎ SYMBOL MEANS IMPORTANT SIZE.
2. □ SYMBOL MEANS IMPORTANT ITEM.
3. ▲ SYMBOL MEANS ILLUSTRATE.
4. THIS PART SHOULD NOT CONTAIN AND SUBSTANCES WHICH ARE SPECIFIED IN SPT-00001; SPT-00002 (WHEN SPECIFIED FOR HALOGEN FREE/ LOW HALOGEN) ISSUED BY PEGATRON.
5. — CUT LINE.

ITEM	PART NAME	PART NO	Q'TY/SET	MATERIAL (SPEC.)	REMARK

MATERIAL (SPEC)
NOTE

SELECT v			v
DIM.(mm) \ TOL.	A	B	EXTRA
~50 ±	0.05	0.10	±0.20
51-100 ±	0.10	0.20	
101-150 ±	0.20	0.30	
151~ ±	0.20	0.50	

UNIT MM | SIZE A4

SCALE 1:1

PEGATRON Corporation

DESCRIPTION
PRODUCT LABEL RING REDSKY V4

MODEL NO. REDSKY
DRAWING NO. 1510-XXXXXXX
PARTS NO.

DESIGNED Jerry Wu
CHECKED Jack Chen
APPROVED Andy Chang