Dynamic Frequency Selection Test Report

EUT Name: eero

Model No.: J010001

CFR 47 Part 15.407(h) 2019, RSS-247 (6.3) 2017 and KDB 905462 D02 UNII DFS Compliance Procedures New Rules v02

Prepared for:

eero LLC
660 3rd Street, 4th Floor
San Francisco, CA 94107 U.S.A.
Tel: (415) 738-7972
Fax:

Prepared by:

TUV Rheinland of North America, Inc.
1279 Quarry Lane, Ste. A
Pleasanton, CA 94566
Tel: (925) 249-9123
Fax: (925) 249-9124
http://www.tuv.com/

Report/Issue Date: December 19, 2019
Report Number: 31965418.001
Revision Number: 1
Job # 0234107595

Revisions

Revision No.	Date MM/DD/YYYY	Reason for Change	Author
0	12/12/2019	Original Document	N/A
1	12/19/2019	Revised test method for Performance Requirement Check and In-Service Monitoring to conducted.	KC

Note: Latest revision report will replace all previous reports.

Statement of Compliance

Manufacturer:	eero LLC 660 3rd Street, 4th Floor San Francisco, CA 94107 (415) 738-7972
Requester / Applicant:	Clifford Clarke
Name of Equipment:	eero
Model No.	J010001
Type of Equipment:	Intentional Radiator
Application of Regulations:	CFR 47 Part 15.407(h) 2019, RSS-247 (6.3) 2017 and KDB 905462 D02 UNII DFS Compliance Procedures New Rules v02
Test Dates:	August 14, 2019 to October 21, 2019

Guidance Documents:

Dynamic Frequency Selection: CFR47 Part 2 and 15.407(h), RSS-247 (6.3) 2017, KDB 905462 D02 UNII DFS Compliance Procedures New Rules v02

Test Methods:

Dynamic Frequency Selection: CFR47 Part 2 and 15.407(h), RSS-247 (6.3) 2017, KDB 905462 D02 UNII DFS Compliance Procedures New Rules v02

The Dynamic Frequency Selection test and documented data described in this report has been performed and recorded by TUV Rheinland, in accordance with the standards and procedures listed herein. As the responsible authorized agent of the EMC laboratory, I hereby declare that the equipment described above has been shown to be compliant with the EMC requirements of the stated regulations and standards based on these results. If any special accessories and/or modifications were required for compliance, they are listed in the Executive Summary of this report.

This report must not be used to claim product endorsement by A2LA or any agency of the U.S. Government. This report contains data that are not covered by A2LA accreditation. This report shall not be reproduced except in full, without the written authorization of TUV Rheinland of North America.

Kerwinn Corpuz	December 19, 2019	Richard Decker	December 19, 2019
Test Engineer	Date	Laboratory Signatory	Date

INDUSTRY CANADA

Testing Cert #3331.02 **US1131** **2932M**

1 Executive Summary 9

1.1 Scope 9

1.2 Purpose 9

1.3 Summary of Test Results 10

1.4 Special Accessories 12

1.5 Equipment Modifications 12

2 Laboratory Information 13

2.1 Accreditations & Endorsements 13

2.1.1 US Federal Communications Commission 13
2.1.2 A2LA 13
2.1.3 Canada – Industry Canada 13
2.1.4 Japan – VCCI 13
2.1.5 Acceptance by Mutual Recognition Arrangement 13

2.2 Test Facilities 14

2.2.1 Emission Test Facility 14
2.2.2 Immunity Test Facility 14

2.3 Measurement Uncertainty 15

2.3.1 Sample Calculation – radiated & conducted emissions 15
2.3.2 Measurement Uncertainty 15
2.3.3 Measurement Uncertainty Immunity 16

2.4 Calibration Traceability 16

3 Product Information 17

3.2 Equipment Configuration 17

3.3 Operating Mode 17

4 Dynamic Frequency Selection 18

4.1 DFS Applicability 18

4.2 DFS Requirements 19

4.3 Test Setup Protocol 22

4.4 Radar Waveform Calibration Plot 23

4.5 Channel Loading 28

4.6 DFS Detection Threshold 31

4.6.1 Test Method 31
4.6.2 Results 32

4.7 UNII Detection Bandwidth 33

4.7.1 Test Method 33
4.7.2 Results 33

4.8 Performance Requirement Checks 39

4.8.1 Test Method 39
4.8.2 Results 39

4.9 In-Service Monitoring **44**
4.9.1 Test Method 44
4.9.2 Results 44
4.10 Statistic Performance Check **49**
5 Test Equipment Use List ***71***
6 Test Setup Photo ***72***
7 DFS Test Plan ***76***
7.1 Introduction **76**
7.2 Customer **76**
7.3 Equipment Under Test (EUT) **77**
7.4 Test Specification **79**
Appendix A ***80***
A.1 Radar Type 5 Parameters for 20 MHz Bandwidth **80**
A.2 Radar Type 5 Parameters for 40 MHz Bandwidth **110**
A.3 Radar Type 5 Parameters for 80 MHz Bandwidth **140**
A.4 Radar Type 6 Parameters for 20 MHz Bandwidth **170**
A.5 Radar Type 6 Parameters for 40 MHz Bandwidth **185**
A.6 Radar Type 6 Parameters for 80 MHz Bandwidth **200**

Figure 1: Radar Type 0 DFS Detection Threshold Level at 5600 MHz 23
Figure 2: Radar Type 1A DFS Detection Threshold Level at 5600 MHz 24
Figure 3: Radar Type 1B DFS Detection Threshold Level at 5600 MHz 24
Figure 4: Radar Type 2 DFS Detection Threshold Level at 5600 MHz 25
Figure 5: Radar Type 3 DFS Detection Threshold Level at 5600 MHz 25
Figure 6: Radar Type 4 DFS Detection Threshold Level at 5600 MHz 26
Figure 7: Radar Type 5 DFS Detection Threshold Level at 5600 MHz 26
Figure 8: Radar Type 6 DFS Detection Threshold Level at 5600 MHz (9 Pulses in Burst) 27
Figure 9: EUT Channel Loading at 5260 MHz. (20 MHz bandwidth) 28
Figure 10: EUT Channel Loading at 5270 MHz. (40 MHz bandwidth) 29
Figure 11: EUT Channel Loading at 5290 MHz (80 MHz bandwidth) 30
Figure 12: 99% Bandwidth at Error! Reference source not found. 34
Figure 13: 99% Bandwidth at Error! Reference source not found. 34
Figure 14: 99% Bandwidth at 5290 MHz 35
Figure 15: Initial Channel Availability Check for 80 MHz Bandwidth 41
Figure 16: Radar Pulse Injection near the Beginning of Channel Availability Check for 80 MHz Bandwidth 42
Figure 17: Radar Pulse Injection near the End of Channel Availability Check for 80 MHz Bandwidth 43
Figure 18: Channel Move Time and Channel Closing Transmission Time using Pulse Radar Waveform 0 in Master Mode 11AC VHT80, 80 MHz Bandwidth 46
Figure 19: Channel Move Time and Channel Closing Transmission Time using Pulse Radar Waveform 0 for 80 MHz Bandwidth (Close-up) 47
Figure 20: Non-Occupancy Period using Waveform Type 0 in Master Mode for 11AC VHT80, 80 MHz Bandwidth 48
Figure 21: DFS Test Setup Photo for Master – Radiated Method – View 1 72
Figure 22: DFS Test Setup Photo for Master – Radiated Method – View 2 73
Figure 23: DFS Test Setup Photo for Master – Conducted Method – View 1 74
Figure 24: DFS Test Setup Photo for Master – Conducted Method – View 2 75

Table 1: Summary of Test Results for Master Device Mode 10
Table 2: Applicability of DFS Requirements Prior to Use of a Channel 18
Table 3: Applicability of DFS requirements during normal operation 18
Table 4: DFS Detection Thresholds for Master Devices and Client Devices With Radar Detection 19
Table 5: DFS Response Requirement Values 19
Table 6: Short Pulse Radar Test Waveforms 20
Table 7: Pulse Repetition Intervals Value for Test A 20
Table 8: Long Pulse Radar Test Waveform 21
Table 9: Frequency Hopping Radar Test Waveform 21
Table 10: U-NII Detection Bandwidth for 20 MHz Bandwidth – Test Results 36
Table 11: U-NII Detection Bandwidth for 40 MHz Bandwidth – Test Results 37
Table 12: U-NII Detection Bandwidth for 80 MHz Bandwidth – Test Results 38
Table 13: Channel Availability Checks for 80 MHz Bandwidth – Test Results 40
Table 14: In-Service Monitoring – Test Results 45
Table 15: Statistic Performance Checks for 20 MHz Bandwidth – Summary 50
Table 16: Statistic Performance Checks for 40 MHz Bandwidth – Summary 51
Table 17: Statistic Performance Checks for 80 MHz Bandwidth – Summary 52
Table 18: Statistic Performance Check for 20 MHz Bandwidth - FCC Radar Type 1 53
Table 19: Statistic Performance Check for 40 MHz Bandwidth - FCC Radar Type 1 54
Table 20: Statistic Performance Check for 80 MHz Bandwidth - FCC Radar Type 1 55
Table 21: Statistic Performance Check for 20 MHz Bandwidth - FCC Radar Type 2 56
Table 22: Statistic Performance Check for 40 MHz Bandwidth - FCC Radar Type 2 57
Table 23: Statistic Performance Check for 80 MHz Bandwidth - FCC Radar Type 2 58
Table 24: Statistic Performance Check for 20 MHz Bandwidth - FCC Radar Type 3 59
Table 25: Statistic Performance Check for 40 MHz Bandwidth - FCC Radar Type 3 60
Table 26: Statistic Performance Check for 80 MHz Bandwidth - FCC Radar Type 3 61
Table 27: Statistic Performance Check for 20 MHz Bandwidth - FCC Radar Type 4 62
Table 28: Statistic Performance Check for 40 MHz Bandwidth - FCC Radar Type 4 63
Table 29: Statistic Performance Check for 80 MHz Bandwidth - FCC Radar Type 4 64
Table 30: Statistic Performance Check for FCC Radar Type 5 for 20 MHz Bandwidth 65
Table 31: Statistic Performance Check for FCC Radar Type 5 for 40 MHz Bandwidth 66
Table 32: Statistic Performance Check for FCC Radar Type 5 for 80 MHz Bandwidth 67
Table 33: Statistic Performance Check for FCC Radar Type 6 for 20 MHz Bandwidth 68
Table 34: Statistic Performance Check for FCC Radar Type 6 for 40 MHz Bandwidth 69

Table 35: Statistic Performance Check for FCC Radar Type 6 for 80 MHz Bandwidth 70
Table 36: Customer Information 76
Table 37: Technical Contact Information 76
Table 38: EUT Specifications 77
Table 39: Interface Specifications 78
Table 40: Supported Equipment 78
Table 41: Description of Sample used for Testing 78
Table 42: Test Mode for DFS 78
Table 43: Test Specifications 79

1 Executive Summary

1.1 Scope

This report is intended to document the status of conformance with the requirements of the CFR 47 Part 15.407(h) 2019, RSS-247 (6.3) 2017 and KDB 905462 D02 UNII DFS Compliance Procedures New Rules v02 based on the results of testing performed on August 14, 2019 through October 21, 2019 on the eero Model J010001 manufactured by eero LLC. This report only applies to the specific samples tested under the stated test conditions. It is the responsibility of the manufacturer to assure that additional production units of this model are manufactured with identical or EMI equivalent electrical and mechanical components. This report is further intended to document changes and modifications to the EUT throughout its life cycle. All documentation will be included as a supplement.

1.2 Purpose

Testing was performed to evaluate the dynamic frequency selection performance of the eero in accordance with the applicable requirements, procedures, and criteria defined in the application of regulations and application of standards listed in this report.

1.3 Summary of Test Results

Table 1: Summary of Test Results for Master Device Mode

Requirements	Test Method KDB 905462	Description	Test Parameters	Measured Value	Result
20 MHz Bandwidth					
Detection Threshold	Sect. 7.8.1	EUT Min. Detection Level	-64 dBm ≥ 200 mW -62 dBm <200 mW	-63.19 dBm	**Complied**
Detection Bandwidth	Sect. 7.8.1	U-NII Detection Bandwidth	Min 100% of 99% BW.	20 MHz (detected bandwidth)	**Complied**
Performance Requirements Check	Sect. 7.8.2.1	Initial Channel Check	CAC ≥ 60s	See 80 MHz BW test result	**Complied**
	Sect. 7.8.2.2	Burst Radar at the beginning	150s (2.5min)	See 80 MHz BW test result	**Complied**
	Sect. 7.8.2.3	Burst Radar at the End	150s (2.5min)	See 80 MHz BW test result	**Complied**
In-Service Monitoring	Sect. 7.8.3	Channel Moving Time	CMT ≤ 10s	See 80 MHz BW test result	**Complied**
		Channel Closing Time Transmission	200 ms + an agg. Of 60 ms over remaining 10s.	See 80 MHz BW test result	**Complied**
		Non-Occupancy Period	≥ 30 min.	See 80 MHz BW test result	**Complied**
Radar Statistic Performance Check	Sect. 7.8.4	Waveform 1 - 4 Detections	60% in 30 trials 80% of Aggregate	Type 1A – 97% Type 1B – 97% Type 2 – 100% Type 3 – 83.3% Type 4 – 73.3% Aggre.1- 4 – 88.4%	**Complied**
		Waveform 5 Detections	80% in 30 trials	Type 5 – 90%	
		Waveform 6 Detections	70% in 30 trials	Type 6 – 96.7%	
Transmit Power Control	CFR47 15.407 (h)(1)		6 dB below 30 dBm EIRP or less than 500 mW.	Manufacturer's Statement	**Complied**
Uniform Spreading	CFR47 15.407 (h)(2)		Manufacturer's Statement		**Complied**
40 MHz Bandwidth					
Detection Threshold	Sect. 7.8.1	EUT Min. Detection Level	-64 dBm ≥ 200 mW -62 dBm <200 mW	-63.19 dBm	**Complied**
Detection Bandwidth	Sect. 7.8.1	U-NII Detection Bandwidth	Min 100% of 99% BW.	40 MHz (detected bandwidth)	**Complied**
Performance Requirements Check	Sect. 7.8.2.1	Initial Channel Check	CAC ≥ 60s	See 80 MHz BW test result	**Complied**
	Sect. 7.8.2.2	Burst Radar at the beginning	150s (2.5min)	See 80 MHz BW test result	**Complied**
	Sect. 7.8.2.3	Burst Radar at the End	150s (2.5min)	See 80 MHz BW test result	**Complied**
In Service Monitoring	Sect. 7.8.3	Channel Moving Time	CMT ≤ 10s	See 80 MHz BW test result	**Complied**

In-Service Monitoring		Channel Closing Time Transmission	200 ms + an agg. Of 60 ms over remaining 10s.	See 80 MHz BW test result	**Complied**
		Non-Occupancy Period	≥ 30 min.	See 80 MHz BW test result	**Complied**
Radar Statistic Performance Check	Sect. 7.8.4	Waveform 1 - 4 Detections	60% in 30 trials 80% of Aggregate	Type 1A – 97% Type 1B – 97% Type 2 – 86.7% Type 3 – 73.3% Type 4 – 76.7% Aggre.1- 4 – 83.4 %	**Complied**
		Waveform 5 Detections	80% in 30 trials	Type 5 – 86.7%	
		Waveform 6 Detections	70% in 30 trials	Type 6 – 100%	
Transmit Power Control	CFR47 15.407 (h)(1)		6 dB below 30 dBm EIRP or less than 500 mW.	Manufacturer's Statement	**Complied**
Uniform Spreading	CFR47 15.407 (h)(2)		Manufacturer's Statement		**Complied**
80 MHz Bandwidth					
Detection Threshold	Sect. 7.8.1	EUT Min. Detection Level	-64 dBm ≥ 200 mW -62 dBm <200 mW	-63.19 dBm	**Complied**
Detection Bandwidth	Sect. 7.8.1	U-NII Detection Bandwidth	Min 100% of 99% BW.	80 MHz (detected bandwidth)	**Complied**
Performance Requirements Check	Sect. 7.8.2.1	Initial Channel Check	CAC ≥ 60s	After 1.35 seconds	**Complied**
	Sect. 7.8.2.2	Burst Radar at the beginning	150s (2.5min)	Inject at 4.35 seconds	**Complied**
	Sect. 7.8.2.3	Burst Radar at the End	150s (2.5min)	Inject at 58.65 seconds	**Complied**
In-Service Monitoring	Sect. 7.8.3	Channel Moving Time	CMT ≤ 10s	1.5 ms	**Complied**
		Channel Closing Time Transmission	200 ms + an agg. Of 60 ms over remaining 10s.	14.7 ms	**Complied**
		Non-Occupancy Period	≥ 30 min.	> 30 min.	**Complied**
Radar Statistic Performance Check	Sect. 7.8.4	Waveform 1 - 4 Detections	60% in 30 trials 80% of Aggregate	Type 1A – 93.3% Type 1B – 93.3% Type 2 – 83.3% Type 3 – 90% Type 4 – 90% Aggre.1- 4 – 89.2%	**Complied**
		Waveform 5 Detections	80% in 30 trials	Type 5 – 80.0%	
		Waveform 6 Detections	70% in 30 trials	Type 6 – 100%	
Transmit Power Control	CFR47 15.407 (h)(1)		6 dB below 30 dBm EIRP or less than 500 mW.	Manufacturer's Statement	**Complied**

Uniform Spreading	CFR47 15.407 (h)(2)		Manufacturer's Statement		**Complied**

1.4 Special Accessories

No special accessories were necessary in order to achieve compliance.

1.5 Equipment Modifications

None.

2 Laboratory Information

2.1 Accreditations & Endorsements

2.1.1 US Federal Communications Commission

TUV Rheinland of North America at 1279 Quarry Ln, Pleasanton, CA 94566 is recognized by the commission for performing testing services for the general public on a fee basis. These laboratory test facilities have been fully described in reports submitted to and accepted by the FCC (US1131). The laboratory scope of accreditation includes: Title 47 CFR Parts 15, 18, and 90. The accreditation is updated every 3 years.

2.1.2 A2LA

TUV Rheinland of North America is accredited by the National Voluntary Laboratory Accreditation Program, which is administered under the auspices of the National Institute of Standards and Technology. The laboratory has been assessed and accredited in accordance with ISO Guide 17025:2005 and ISO 9002 (Lab Code Testing Cert #3331.02). The scope of laboratory accreditation includes emission and immunity testing. The accreditation is updated annually.

2.1.3 Canada – Industry Canada

TUV Rheinland of North America at the 1279 Quarry Ln, Pleasanton, CA 94566 address is accredited by Industry Canada for performing testing services for the general public on a fee basis. This laboratory test facilities have been fully described in reports submitted to and accepted by Industry Canada (File Number 2932M). This reference number is the indication to the Industry Canada Certification Officers that the site meets the requirements of RSS 212, Issue 1 (Provisional). The accreditation is updated every 3 years.

2.1.4 Japan – VCCI

The Voluntary Control Council for Interference by Information Technology Equipment (VCCI) is a group that consists of Information Technology Equipment (ITE) manufacturers and EMC test laboratories. The purpose of the Council is to take voluntary control measures against electromagnetic interference from Information Technology Equipment, and thereby contribute to the development of a socially beneficial and responsible state of affairs in the realm of Information Technology Equipment in Japan. TUV Rheinland of North America at 1279 Quarry Ln, Pleasanton, CA 94566 has been assessed and approved in accordance with the Regulations for Voluntary Control Measures.

VCCI Registration No. for Pleasanton: A-0268

2.1.5 Acceptance by Mutual Recognition Arrangement

The United States has an established agreement with specific countries under the Asia Pacific Laboratory Accreditation Corporation (APLAC) Mutual Recognition Arrangement. Under this agreement, all TUV Rheinland at 1279 Quarry Lane, Pleasanton, CA 94566 test results and test reports within the scope of the laboratory A2LA accreditation will be accepted by each member country.

2.2 Test Facilities

All of the test facilities are located at 1279 Quarry Lane, Pleasanton, California 94566, USA.

2.2.1 Emission Test Facility

The Semi-Anechoic chamber and AC Line Conducted measurement facility used to collect the radiated and conducted data has been constructed in accordance with ANSI C63.7:1992. The site has been measured in accordance with and verified to comply with the theoretical normalized site attenuation requirements of ANSI C63.4-2014, at a test distance of 3 and 5 meters. The site is listed with the FCC and accredited by A2LA (Lab Code US1131). The 3/5-meter semi-anechoic chamber used to collect the radiated data has been verified to comply with the theoretical normalized site attenuation requirements of ANSI C63.4-2014, at a test distance of 3 meter and 5 meters. A report detailing this site can be obtained from TUV Rheinland of North America.

2.2.2 Immunity Test Facility

ESD, EFT, Surge, PQF: These tests are performed in an environmentally controlled room with a 3.7 m x 4.8 m x 3.175 mm thick aluminum floor connected to PE ground.

For ESD testing, tabletop equipment is placed on an insulated mat with a surface resistivity of 10^9 Ohms/square on a 1.6 m x 0.8 m x 0.8 m high non-conductive table with a 3.175 mm aluminum top (Horizontal Coupling Plane). The HCP is connected to the main ground plane via a low impedance ground strap through two 470-kΩ resistors. The Vertical Coupling Plane consists of an aluminum plate 50 cm x 50 cm x 3.175 mm thick. The VCP is connected to the main ground plane via a low impedance ground strap through two 470-kΩ resistors.

For EFT, Surge, PQF, the HCP and VCP are removed.

RF Field Immunity testing is performed in a 7.3m x 4.3m x 4.1m anechoic chamber.

RF Conducted and Magnetic Field Immunity testing is performed on a 4.8m x 3.7m x 3.175mm thick aluminum ground plane.

All test areas allow a minimum distance of 1 meter from the EUT to walls or conducting objects.

2.3 Measurement Uncertainty

Two types of measurement uncertainty are expressed in this report, per *ISO Guide To The Expression Of Uncertainty In Measurement*, 1st Edition, 1995.

The Combined Standard Uncertainty is the standard uncertainty of the result of a measurement when that result is obtained from the values of a number of other quantities; it is equal to the positive square root of the sum of the variances or co-variances of these other quantities, weighted according to how the measurement result varies with changes in these quantities. The term *standard uncertainty* is the result of a measurement expressed as a standard deviation.

2.3.1 Sample Calculation – radiated & conducted emissions

The field strength is calculated by subtracting the Amplifier Gain and adding the Cable Loss and Antenna Correction Factor to the measured reading. The basic equation is as follows:

Field Strength (dBμV/m) = RAW - AMP + CBL + ACF

Where: RAW = Measured level before correction (dBμV)

AMP = Amplifier Gain (dB)

CBL = Cable Loss (dB)

ACF = Antenna Correction Factor (dB/m)

$$\mu V/m = 10^{\frac{dB\mu V/m}{20}}$$

Sample radiated emissions calculation @ 30 MHz

Measurement +Antenna Factor–Amplifier Gain+Cable loss=Radiated Emissions (dBuV/m)

25 dBuV/m + 17.5 dB – 20 dB + 1.0 dB = 23.5 dBuV/m

2.3.2 Measurement Uncertainty

Per CISPR 16-4-2	**U_{lab}**	**U_{cispr}**
Radiated Disturbance @ 10 meters		
30 – 1,000 MHz	2.25 dB	4.51 dB
Radiated Disturbance @ 3 meters		
30 – 1,000 MHz	2.26 dB	4.52 dB
1 – 6 GHz	2.12 dB	4.25 dB
6 – 18 GHz	2.47 dB	4.93 dB
Conducted Disturbance @ Mains Terminals		
150 kHz – 30 MHz	1.09 dB	2.18 dB
Disturbance Power		

30 MHz – 300 MHz	3.92 dB	4.3 dB

Voltech PM6000A

The estimated combined standard uncertainty for harmonic current and flicker measurements is ± 5.0%.	Per CISPR 16-4-2 Methods

2.3.3 Measurement Uncertainty Immunity

The estimated combined standard uncertainty for ESD immunity measurements is ± 8.2%.	Per IEC 61000-4-2
The estimated combined standard uncertainty for radiated immunity measurements is ± 4.10 dB.	Per IEC 61000-4-3
The estimated combined standard uncertainty for conducted immunity measurements with CDN is ± 3.66 dB	Per IEC 61000-4-6
The estimated combined standard uncertainty for power frequency magnetic field immunity is ± 2.9%.	Per IEC 61000-4-8

Thermo KeyTek EMC Pro

The estimated combined standard uncertainty for EFT fast transient immunity measurements is ± 2.6%.
The estimated combined standard uncertainty for surge immunity measurements is ± 2.6%.
The estimated combined standard uncertainty for voltage variation and interruption measurements is ± 1.74%.

The expanded uncertainty at a level of 95% confidence is obtained by multiplying the combined standard uncertainty by a coverage factor of 2. Compliance criteria are not based on measurement uncertainty.

2.4 Calibration Traceability

All measurement instrumentation is traceable to the National Institute of Standards and Technology (NIST). Measurement method complies with ANSI/NCSL Z540-1-1994 and ISO Standard 17025:2005. Equipment calibration records are kept on file at the test facility.

3 Product Information

3.1 Product Description

The Model J010001, Serial Number J942-0038-RCDG-YK2F, eero, is a Wi-Fi router for the home capable of operating in the 2.4 GHz and 5 GHz frequency bands over 20 MHz, 40 MHz and 80 MHz channels.

3.2 Equipment Configuration

A description of the equipment configuration is given in the Test Plan Section. The EUT was tested as called for in the test standard and was configured and operated in a manner consistent with its intended use. The EUT was connected to rated power and allowed to reach intended operating conditions. The placement of the EUT system components was guided by the test standard and selected to represent typical installation conditions.

In the case of an EUT that can operate in more than one configuration, preliminary testing was performed to determine the configuration that produced maximum radiation.

The final configuration was selected to produce the worst case radiation for emissions testing and to place the EUT in the most susceptible state for immunity testing.

3.3 Operating Mode

A description of the operation mode is given in the Test Plan Section. In the case of an EUT that can operate in more than one state, preliminary testing was performed to determine the operating mode that produced maximum radiation.

The final operating mode was selected to produce the worst case radiation for emissions testing and to place the EUT in the most susceptible state for immunity testing.

4 Dynamic Frequency Selection

Testing was performed in accordance with CFR47 Part 2 and 15.407(h), RSS-247 (6.3) 2017, KDB 905462 D02 UNII DFS Compliance Procedures New Rules v02. These test methods are listed under the laboratory's A2LA Scope of Accreditation. This test measures and verifies the characteristics and probability of EUT to switch to different operating channel, once the radar signal is detected. Procedures described in KDB 905462 D02 UNII DFS Compliance Procedure New Rules v02 were used.

4.1 DFS Applicability

All devices operated in the frequency range of 5250 MHz-5350 MHz and 5470 MHz-5725MHz must equip with the DFS mechanism. Based on the operational mode of eero Mode J010001, the following requirements shall apply per KDB 905462 D02 procedures.

Table 2: Applicability of DFS Requirements Prior to Use of a Channel

Requirement	Operational Mode		
	Master	**Client Without Radar Detection**	**Client With Radar Detection**
Non-Occupancy Period	Yes	Not required	Yes
DFS Detection Threshold	Yes	Not required	Yes
Channel Availability Check Time	Yes	Not required	Not required
U-NII Detection Bandwidth	Yes	Not required	Yes

Table 3: Applicability of DFS requirements during normal operation

Requirement	Operational Mode		
	Master	**Master Device or Client With Radar Detection**	**Client Without Radar Detection**
DFS Detection Threshold	Yes	Yes	Not required
Channel Closing Transmission Time	Yes	Yes	Yes
Channel Move Time	Yes	Yes	Yes
U-NII Detection Bandwidth	Yes	Yes	Not required

Additional Requirements for device with multiple bandwidth modes	**Master Device or Client With Radar Detection**	**Client Without Radar Detection**
U-NII Detection Bandwidth and Statistical Performance Check	All BW Modes must be tested	Not Required
Channel Move Time and Channel Closing Transmission Time	Test using widest BW Mode	Testing using the widest BW mode available for the link
All other tests	Any single BW Mode	Not Required
Note: Frequencies selected for statistical performance check (Section 7.8.4) should include several frequencies within the radar detection bandwidth and frequencies near the edge of the radar detection bandwidth. For 802.11 devices it is suggested to select frequencies in each of the bonded 20 MHz channel and the channel center frequencies.		

4.2 DFS Requirements

Based on the applicability of eero LLC, Model J010001, the following parameters and probability must be tested for conformance.

Table 4: DFS Detection Thresholds for Master Devices and Client Devices With Radar Detection

Maximum Transmit Power	Value (See Notes 1, 2, & 3)
EIRP ≥ 200 milliwatt	-64 dBm
EIRP < 200 milliwatt and power spectral density < 10 dBm/MHz	-62 dBm
EIRP < 200 milliwatt that do not meet power spectral density requirement	-64 dBm

Note 1: This is the level at the input of the receiver assuming a 0 dBi receive antenna.
Note 2: Throughout these test procedures an additional 1 dB has been added to the amplitude of the test transmission waveforms to account for variations in measurement equipment. This will ensure that the test signal is at or above the detection threshold level to trigger a DFS response.
Note 3: EIRP is based on the highest antenna gain. For MIMO devices refer to KDB Publication 662911 D01.

Table 5: DFS Response Requirement Values

Parameter	Value
Non-occupancy period	Minimum 30 minutes
Channel Availability Check Time	60 seconds
Channel Move Time	10 seconds. See Note 1.
Channel Closing Transmission Time	200 milliseconds + an aggregate of 60 milliseconds over remaining 10 second period. See Notes 1 and 2.
U-NII Detection Bandwidth	Minimum 100% of the U-NII 99% transmission power bandwidth. See Note 3.

Note 1: Channel Move Time and the Channel Closing Transmission should be performed with Radar Type 0. The measurement timing begin at the end of the Radar Type 0 burst.
Note 2: The Channel Closing Transmission Time is comprised of 200 milliseconds starting at the beginning of the Channel Move Time plus any additional intermittent control signals required to facilitate a Channel move (an aggregate of 60 milliseconds) during the remainder of the 10 second period. The aggregate duration of control signals will not count quiet periods in between transmissions.
Note 3: During the U-NII Detection Bandwidth detection test, radar type 0 is used and for each frequency step the minimum percentage of detection is 90 percent. Measurements are performed with no data traffic.

Table 6: Short Pulse Radar Test Waveforms

Radar Type	Pulse Width (µsec)	PRI (µsec)	Number of Pulses	Minimum Percentage of Successful Detection	Minimum Number of Trials
0	1	1428	18	See Note 1	See Note 1
1	1	Test A: 15 unique PRI values randomly selected from the list of 23 PRI Values in Table 5a	Roundup{(1/360)*(19*10^6/PRI_{usec})}	60%	30
		Test B: 15 unique PRI values randomly selected within the range of 518-3066 uSec, with a minimum increment of 1 uSec, excluding PRI values selected in Test 1A			
2	1-5	150-230	23-29	60%	30
3	6-10	200-500	16-18	60%	30
4	11-20	200-500	12-16	60%	30
Aggregate (Radar Types 1-4)				80%	120
Note 1: Short Pulse Radar Type 0 should be used for the detection bandwidth test, channel move time and channel closing time tests.					

Table 7: Pulse Repetition Intervals Value for Test A

Pulse Repetition Frequency Number	Pulse Repetition Frequency (Pulse per Second)	Pulse Repetition Interval (Microseconds)
1	1930.5	518
2	1858.7	538
3	1792.1	558
4	1730.1	578
5	1672.2	598
6	1618.1	618
7	1567.4	638
8	1519.8	658
9	1474.9	678

10	1432.7	698
11	1392.8	718
12	1355	738
13	1319.3	758
14	1285.3	778
15	1253.1	798
16	1222.5	818
17	1193.3	838
18	1165.6	858
19	1139	878
20	1113.6	898
21	1089.3	918
22	1066.1	938
23	326.2	3066

Table 8: Long Pulse Radar Test Waveform

Radar Type	Pulse Width (µsec)	Chirp Width (MHz)	PRI (µsec)	Number of Pulses per Burst	Number of Bursts	Minimum Percentage of Successful Detection	Minimum Number of Trials
5	50-100	5-20	1000-2000	1-3	8-20	80%	30

Table 9: Frequency Hopping Radar Test Waveform

Radar Type	Pulse Width (µsec)	PRI (µsec)	Pulses per Hop	Hopping Rate (kHz)	Hopping Sequence Length (msec)	Minimum Percentage of Successful Detection	Minimum Number of Trials
6	1	333	9	0.333	300	70%	30

4.3 Test Setup Protocol

The following test setup was used to evaluate the eero Model J010001 for DFS conformance.

Dynamic Frequency Selection in 5 GHz Radiated Setup:

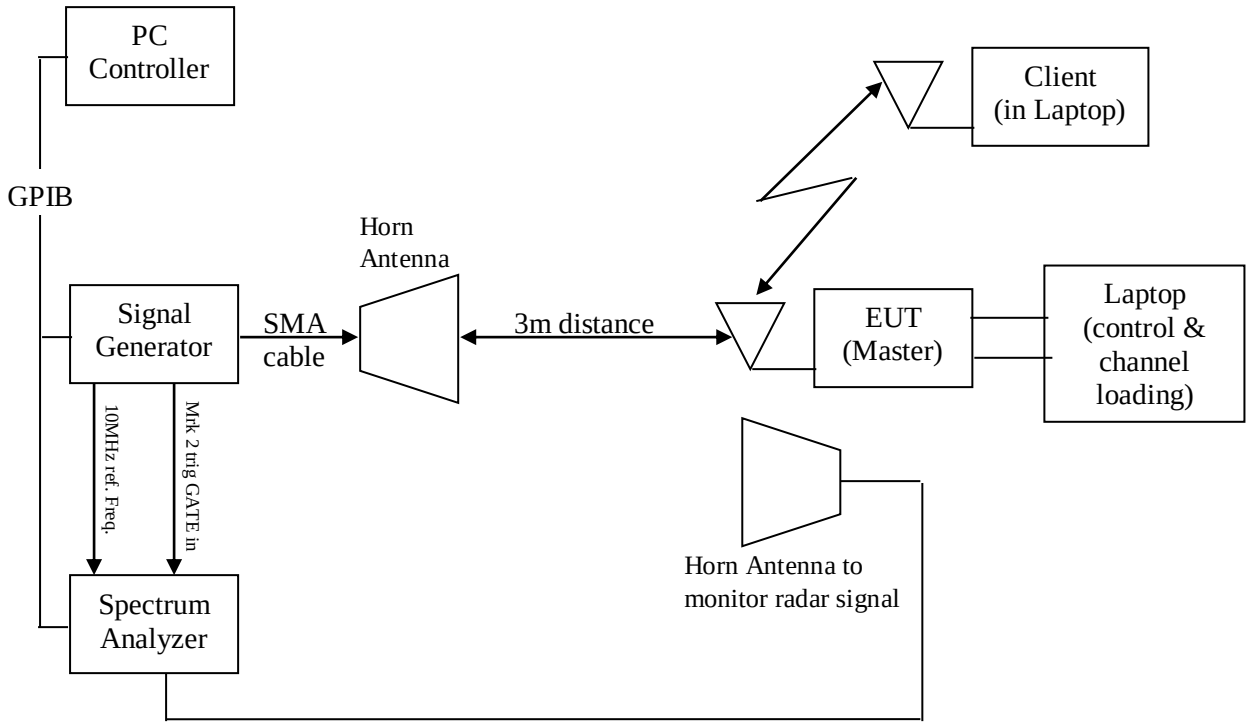

4.4 Radar Waveform Calibration Plot

All six radar waveforms verified at the 5600 MHz center frequency using radiated method. . These waveforms were compensated for the path loss as offset on spectrum analyzer.

The radar signal levels below are calibrated to be less than -63 dBm for EUT threshold detection.

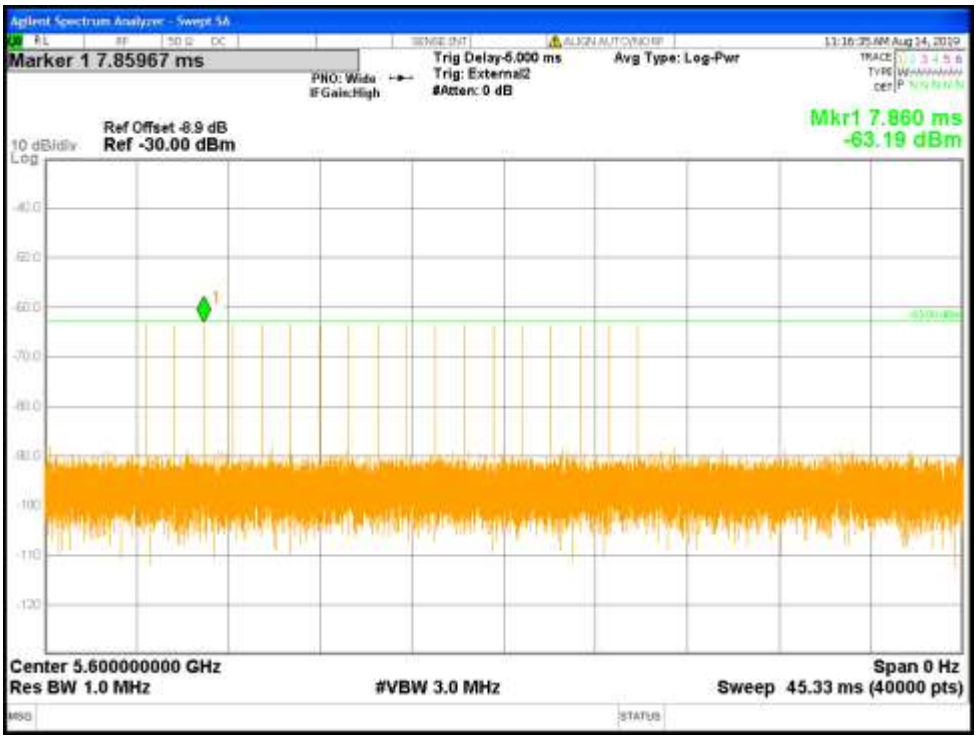

Figure 1: Radar Type 0 DFS Detection Threshold Level at 5600 MHz

Figure 2: Radar Type 1A DFS Detection Threshold Level at 5600 MHz

Figure 3: Radar Type 1B DFS Detection Threshold Level at 5600 MHz

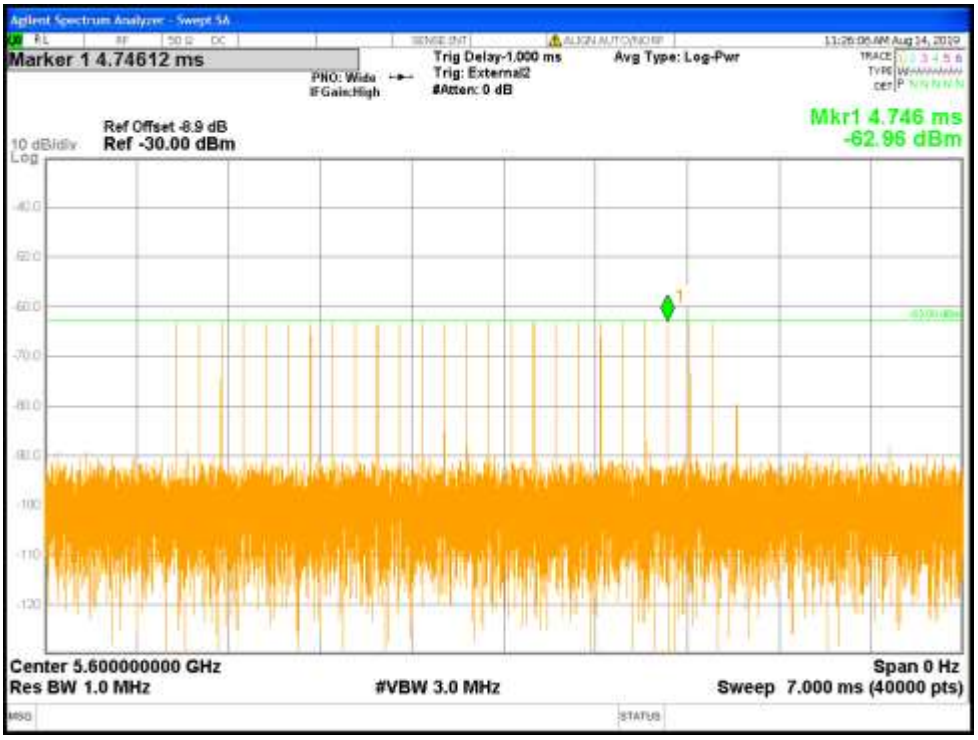

Figure 4: Radar Type 2 DFS Detection Threshold Level at 5600 MHz

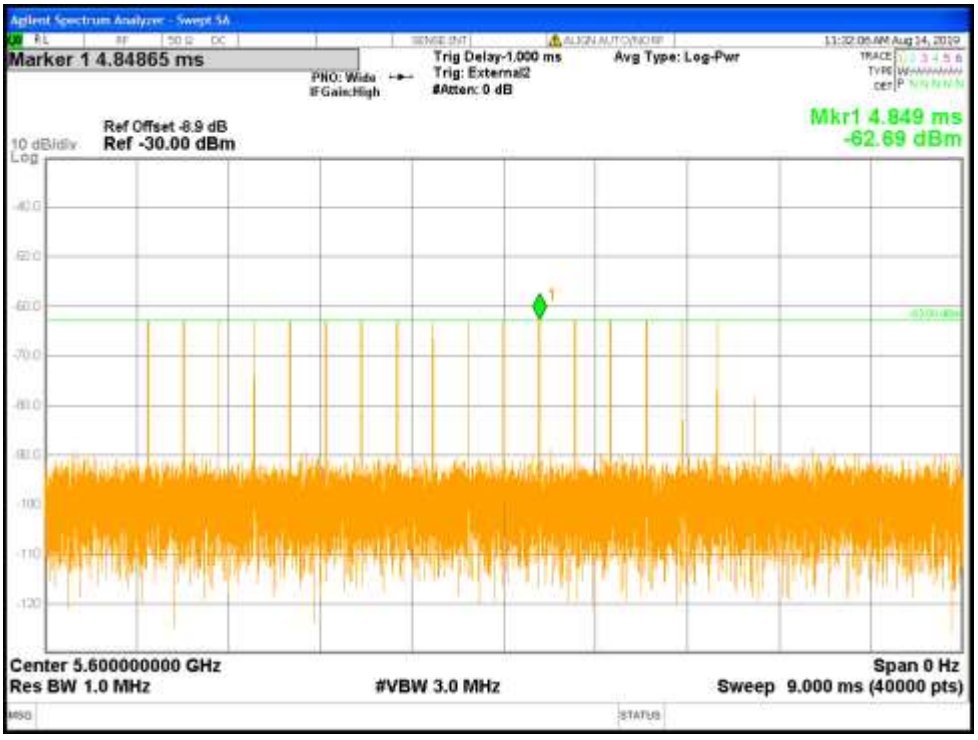

Figure 5: Radar Type 3 DFS Detection Threshold Level at 5600 MHz

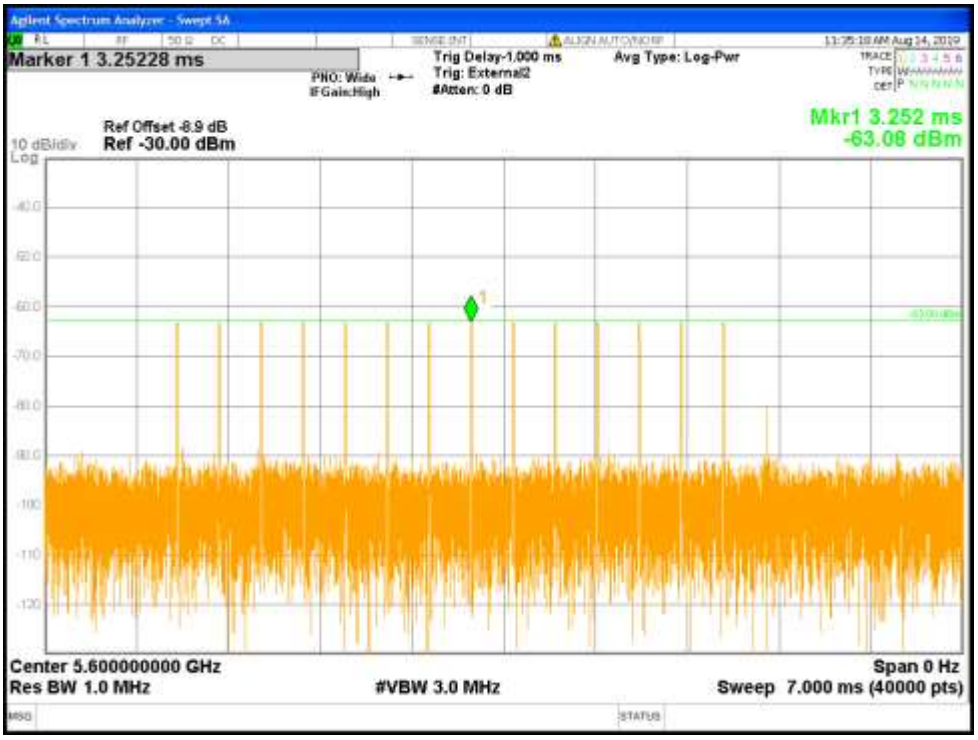

Figure 6: Radar Type 4 DFS Detection Threshold Level at 5600 MHz

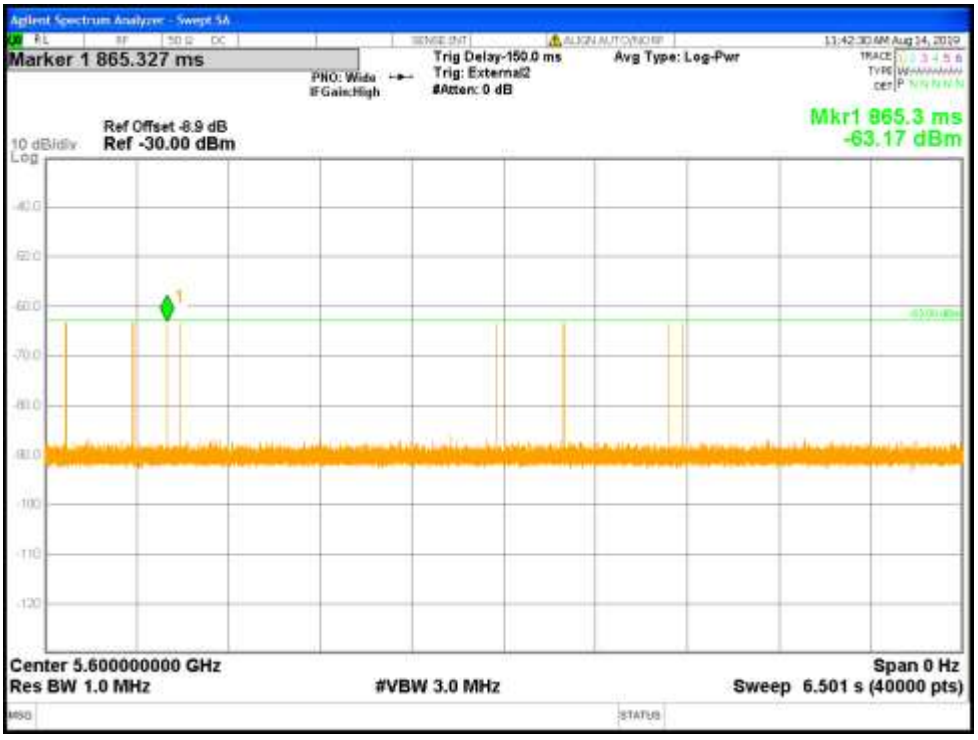

Figure 7: Radar Type 5 DFS Detection Threshold Level at 5600 MHz

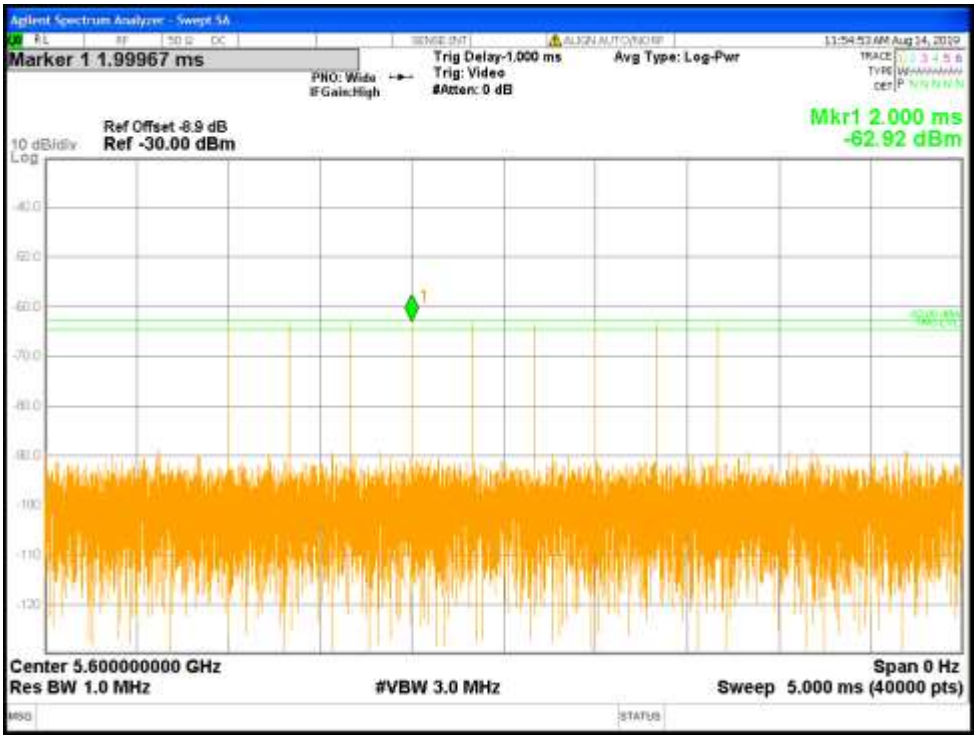

Figure 8: Radar Type 6 DFS Detection Threshold Level at 5600 MHz (9 Pulses in Burst)

4.5 Channel Loading

As stated in Section 7.7 of KDB 905462 D02 UNII DFS Compliance Procedures New Rules v02, data transfer was used during evaluation of the eero, Model J010001. The minimum channel loading requirement is approximately 17% or greater. The operating channel on 5260 MHz was randomly selected for 20 MHz bandwidth, channel 5270 MHz was used for 40 MHz bandwidth, and 5290 MHz was used for 80 MHz bandwidth.

Channel loading calculation: Time On / (Time On + Off Time)

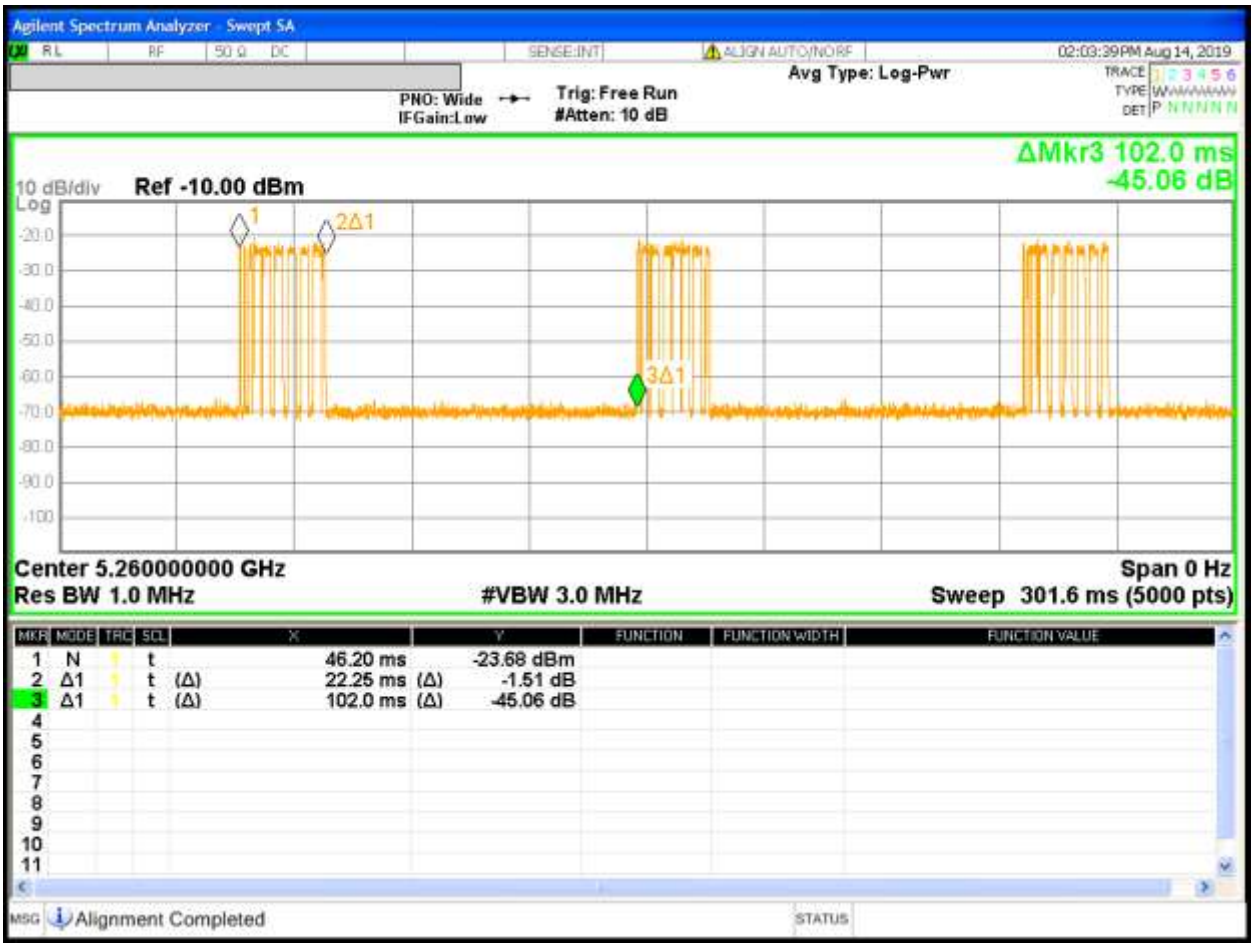

Figure 9: EUT Channel Loading at 5260 MHz. (20 MHz bandwidth)

Note: Channel loading = Time On / (Time On + Off Time)

= (22.25 ms / 102.0 ms) * 100%

= 21.81 %

Figure 10: EUT Channel Loading at 5270 MHz. (40 MHz bandwidth)

Note: Channel loading = Time On / (Time On + Off Time)

= (19.07 ms / 109.9 ms) * 100%

= 17.35 %

Figure 11: EUT Channel Loading at 5290 MHz (80 MHz bandwidth)

Note: Channel loading = Time On / (Time On + Off Time)

= (19.07 ms / 106.1 ms) * 100%

= 17.97 %

4.6 DFS Detection Threshold

All operating channels of the eero, Model J010001 have the same detection bandwidth. The operating channel on 5260 MHz was randomly selected for 20 MHz bandwidth, channel 5270 MHz was used for 40 MHz bandwidth, and 5290 MHz was used for 80 MHz bandwidth. UNII detection bandwidth performed according to Section 7.8.1 of KDB 905462 D02 UNII DFS Compliance Procedures New Rules v02.

4.6.1 Test Method

The radiated method was used to measure the detection threshold. KDB 905462 D02 Section 7.8 was used to determine the DFS generator drive level. The continuous wave at 5260 MHz, 5270 MHz, and 5290 MHz were applied and the corrected level recorded at the EUT end. The setup diagram is shown below.

Test Setup:

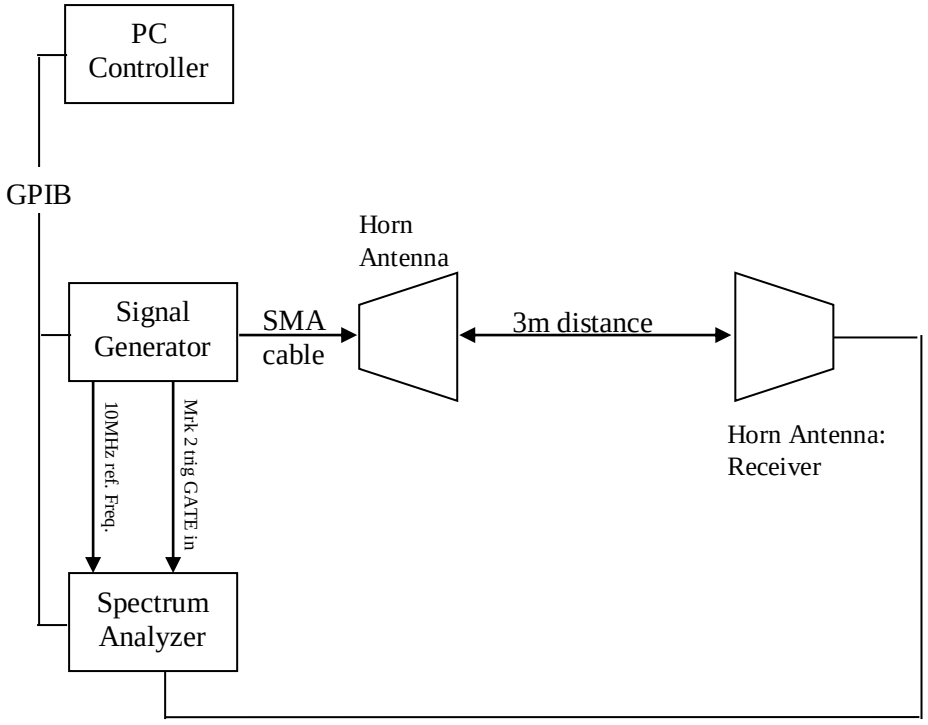

4.6.2 Results

The eero, Model J010001 was provided with uniform loading across the dynamic frequency ranges of 5250 MHz to 5350 MHz.

The required threshold level is -64 dBm since the eero transmitted EIRP power is greater than 200 mW.

A reference offset was applied into the Spectrum Analyzer for cable loss and antenna gain of -8.9 dB.

Radar Injection Level = -64.0 dBm + 1dB

= -63.0 dBm

Note: The above threshold level was used to verify all Waveforms Type 0 to 6, as indicated in Section 4.4 of this report.

4.7 UNII Detection Bandwidth

All operating channels of the eero, Model J010001 have the same detection bandwidth. The operating channel on 5260 MHz was randomly selected for 20 MHz bandwidth testing. Similarly, the 5270 MHz operating channel was used for testing 40 MHz bandwidth, and 5290 MHz operating channel used for 80 MHz bandwidth. UNII detection bandwidth performed according to Section 7.8.1 of KDB 905462 D02.

The measured U-NII detection bandwidth of Model J010001 shall be at least 100% of the 99% channel power bandwidth; per Table 4 of KDB 905462 D02.

4.7.1 Test Method

The KDB 905462 D02 Section 7.8.1 detection bandwidth radiated method was used to measure the detection bandwidth output. The sample configured to operate at 5260 MHz for 20 MHz bandwidth, 5270 MHz for 40 MHz bandwidth, and 5290 MHz for 80 MHz bandwidth. The results are indicated below.

Test Setup:

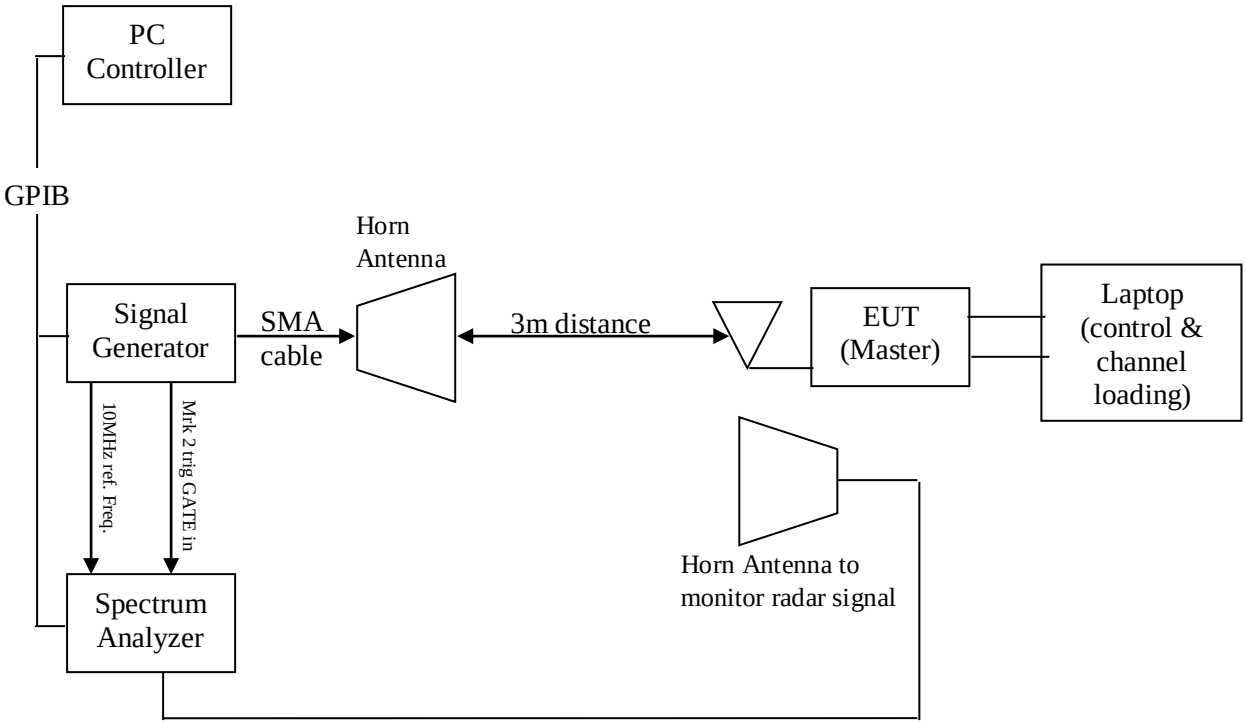

4.7.2 Results

As originally tested, the EUT was found to be compliant to the requirements of the test standard(s).

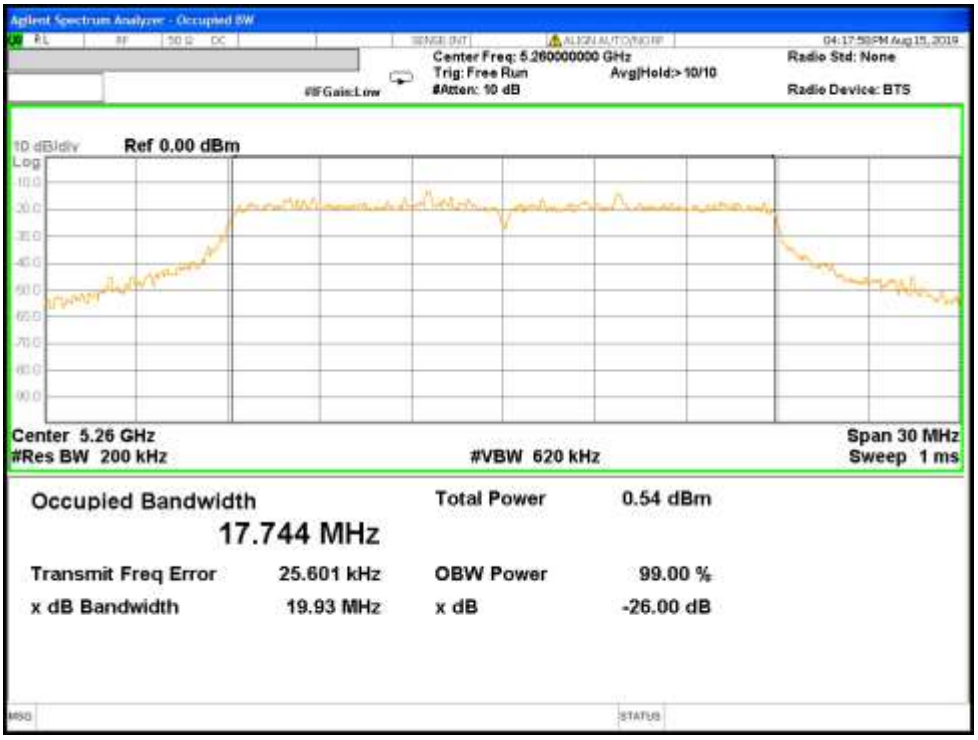

Figure 12: 99% Bandwidth at Error! Reference source not found.

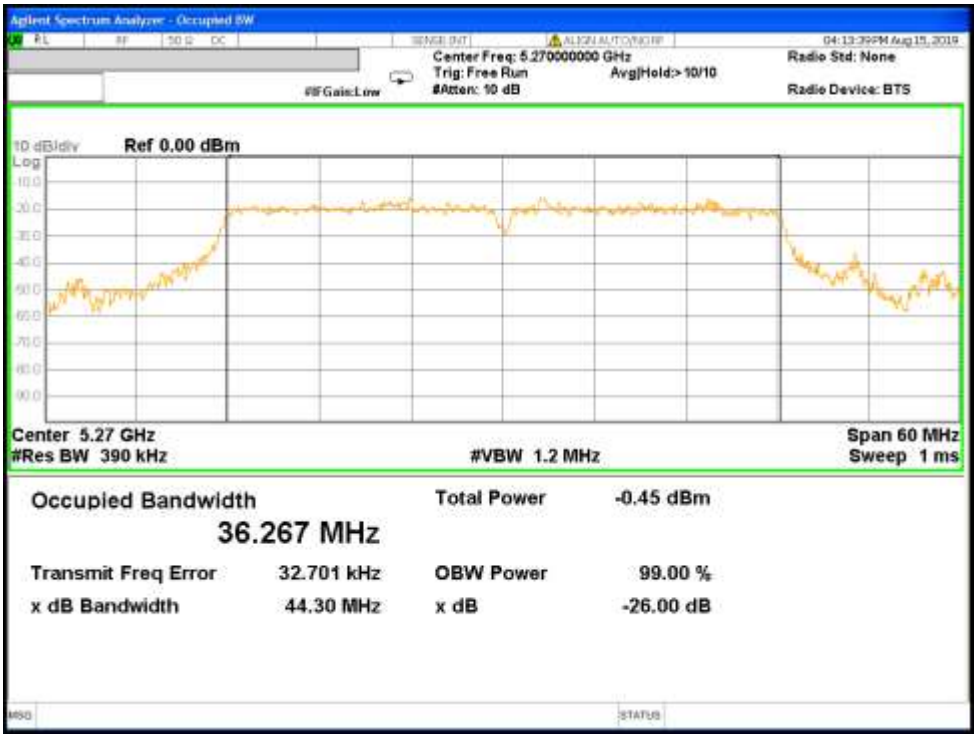

Figure 13: 99% Bandwidth at Error! Reference source not found.

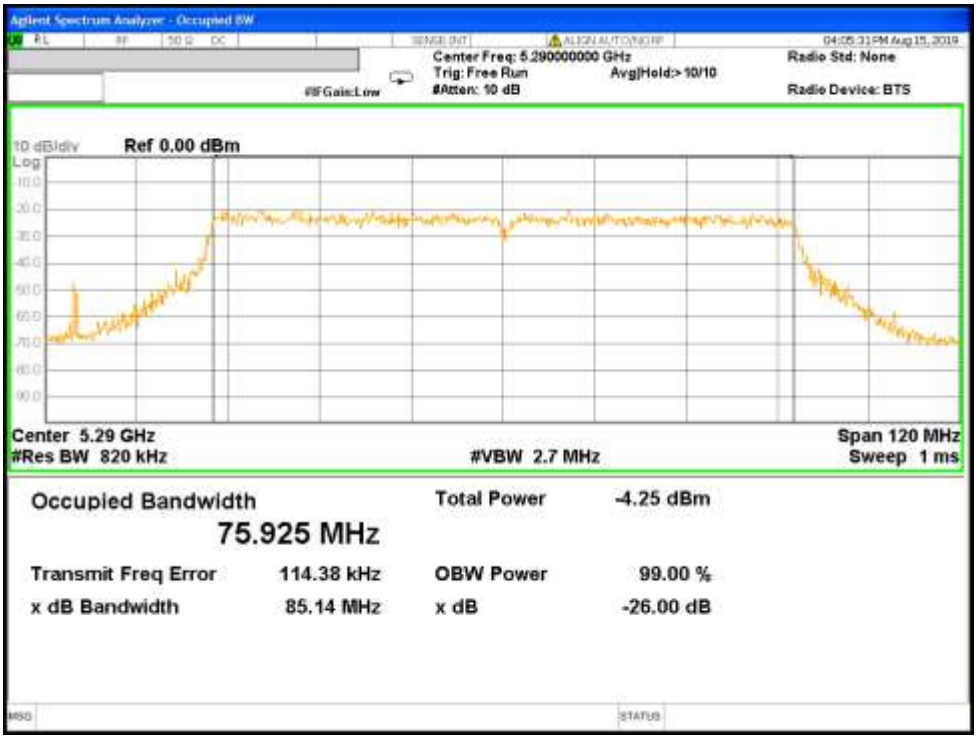

Figure 14: 99% Bandwidth at 5290 MHz

Table 10: U-NII Detection Bandwidth for 20 MHz Bandwidth – Test Results

Test Date: August 14, 2019	
Test Setup: radiated method	**Radar Test Waveform:** 0
Center Frequency: 5260 MHz	**EUT State:** No traffic
Min. Antenna Gain: +3.11 dBi	**Max. Transmitted Power:** +20 dBm.
Required Threshold: -64 dBm	**Detection Threshold:** -63 dBm
Ambient Temperature: 23°C	**Relative Humidity:** 39%RH

Frequency (MHz)	Trial Number										Sucessful Percentage	Note
	1	2	3	4	5	6	7	8	9	10		
5250	Y	Y	Y	Y	Y	Y	Y	Y	Y	Y	100	Fl
5251	Y	Y	Y	Y	Y	Y	Y	Y	Y	Y	100	
5252	Y	Y	Y	Y	Y	Y	Y	Y	Y	Y	100	
5253	Y	Y	Y	Y	Y	Y	Y	Y	Y	Y	100	
5254	Y	Y	Y	Y	Y	Y	Y	Y	Y	Y	100	
5255	Y	Y	Y	Y	Y	Y	Y	Y	Y	Y	100	
5260	Y	Y	Y	Y	Y	Y	Y	Y	Y	Y	100	Fc
5265	Y	Y	Y	Y	Y	Y	Y	Y	Y	Y	100	
5266	Y	Y	Y	Y	Y	Y	Y	Y	Y	Y	100	
5267	Y	Y	Y	Y	Y	Y	Y	Y	Y	Y	100	
5268	Y	Y	Y	Y	Y	Y	Y	Y	Y	Y	100	
5269	Y	Y	Y	Y	Y	Y	Y	Y	Y	Y	100	
5270	Y	Y	Y	Y	Y	Y	Y	Y	Y	Y	100	Fh
5271												
5272												
99% Chan. Power Bandwidth =				17.74 MHz								
Required Detection Bandwidth =				17.74 MHz								
Detection Bandwidth (Fh-Fl) =				20.00 MHz								
Over All Result =				Complies								

Table 11: U-NII Detection Bandwidth for 40 MHz Bandwidth – Test Results

Test Date: August 14, 2019	
Test Setup: radiated method	**Radar Test Waveform:** 0
Center Frequency: 5270 MHz	**EUT State:** No traffic
Min. Antenna Gain: +3.11 dBi	**Max. Transmitted Power:** +20 dBm.
Required Threshold: -64 dBm	**Detection Threshold:** -63 dBm
Ambient Temperature: 23°C	**Relative Humidity:** 39%RH

Frequency (MHz)	Trial Number 1	2	3	4	5	6	7	8	9	10	Sucessful Percentage	Note
5250	Y	Y	Y	Y	Y	Y	Y	Y	Y	Y	100	Fl
5251	Y	Y	Y	Y	Y	Y	Y	Y	Y	Y	100	
5252	Y	Y	Y	Y	Y	Y	Y	Y	Y	Y	100	
5253	Y	Y	Y	Y	Y	Y	Y	Y	Y	Y	100	
5254	Y	Y	Y	Y	Y	Y	Y	Y	Y	Y	100	
5255	Y	Y	Y	Y	Y	Y	Y	Y	Y	Y	100	
5260	Y	Y	Y	Y	Y	Y	Y	Y	Y	Y	100	
5265	Y	Y	Y	Y	Y	Y	Y	Y	Y	Y	100	
5270	Y	Y	Y	Y	Y	Y	Y	Y	Y	Y	100	Fc
5275	Y	Y	Y	Y	Y	Y	Y	Y	Y	Y	100	
5280	Y	Y	Y	Y	Y	Y	Y	Y	Y	Y	100	
5285	Y	Y	Y	Y	Y	Y	Y	Y	Y	Y	100	
5286	Y	Y	Y	Y	Y	Y	Y	Y	Y	Y	100	
5287	Y	Y	Y	Y	Y	Y	Y	Y	Y	Y	100	
5288	Y	Y	Y	Y	Y	Y	Y	Y	Y	Y	100	
5289	Y	Y	Y	Y	Y	Y	Y	Y	Y	Y	100	
5290	Y	Y	Y	Y	Y	Y	Y	Y	Y	Y	100	Fh
99% Chan. Power Bandwidth =					36.27	MHz						
Required Detection Bandwidth =					36.27	MHz						
Detection Bandwidth (Fh-Fl) =					40.00	MHz						
Over All Result =					Complies							

Table 12: U-NII Detection Bandwidth for 80 MHz Bandwidth – Test Results

Test Date: August 14, 2019	
Test Setup: radiated method	**Radar Test Waveform:** 0
Center Frequency: 5290 MHz	**EUT State:** No traffic
Min. Antenna Gain: +3.11 dBi	**Max. Transmitted Power:** +20 dBm.
Required Threshold: -64 dBm	**Detection Threshold:** -63 dBm
Ambient Temperature: 23°C	**Relative Humidity:** 39%RH

Frequency (MHz)	Trial Number 1	2	3	4	5	6	7	8	9	10	Sucessful Percentage	Note
5250	Y	Y	Y	Y	Y	Y	Y	Y	Y	Y	100	Fl
5251	Y	Y	Y	Y	Y	Y	Y	Y	Y	Y	100	
5252	Y	Y	Y	Y	Y	Y	Y	Y	Y	Y	100	
5253	Y	Y	Y	Y	Y	Y	Y	Y	Y	Y	100	
5254	Y	Y	Y	Y	Y	Y	Y	Y	Y	Y	100	
5255	Y	Y	Y	Y	Y	Y	Y	Y	Y	Y	100	
5260	Y	Y	Y	Y	Y	Y	Y	Y	Y	Y	100	
5265	Y	Y	Y	Y	Y	Y	Y	Y	Y	Y	100	
5270	Y	Y	Y	Y	Y	Y	Y	Y	Y	Y	100	
5275	Y	Y	Y	Y	Y	Y	Y	Y	Y	Y	100	
5280	Y	Y	Y	Y	Y	Y	Y	Y	Y	Y	100	
5285	Y	Y	Y	Y	Y	Y	Y	Y	Y	Y	100	
5290	Y	Y	Y	Y	Y	Y	Y	Y	Y	Y	100	Fc
5295	Y	Y	Y	Y	Y	Y	Y	Y	Y	Y	100	
5300	Y	Y	Y	Y	Y	Y	Y	Y	Y	Y	100	
5305	Y	Y	Y	Y	Y	Y	Y	Y	Y	Y	100	
5310	Y	Y	Y	Y	Y	Y	Y	Y	Y	Y	100	
5315	Y	Y	Y	Y	Y	Y	Y	Y	Y	Y	100	
5320	Y	Y	Y	Y	Y	Y	Y	Y	Y	Y	100	
5325	Y	Y	Y	Y	Y	Y	Y	Y	Y	Y	100	
5326	Y	Y	Y	Y	Y	Y	Y	Y	Y	Y	100	
5327	Y	Y	Y	Y	Y	Y	Y	Y	Y	Y	100	
5328	Y	Y	N	Y	Y	Y	Y	Y	Y	Y	100	
5329	Y	Y	Y	Y	Y	Y	Y	Y	Y	Y	100	
5330	Y	Y	Y	Y	Y	Y	Y	Y	Y	Y	100	Fh
99% Chan. Power Bandwidth =					75.93 MHz							
Required Detection Bandwidth =					75.93 MHz							
Detection Bandwidth (Fh-Fl) =					80.00 MHz							
Over All Result =					Complies							

4.8 Performance Requirement Checks

The performance checks consist of the initial channel availability check, radar injection at the beginning of the channel check, and radar injection at the end of the channel check. These parameters of the eero, Model J010001 are verified to ensure the proper radar detection.

The eero, Model J010001 must have 1 minute transmission-free time for initial channel availability check time and 2.5 minutes of transmission-free time for other channel availability check per KDB 905462 D02 UNII DFS Compliance Procedures New Rules v02.

4.8.1 Test Method

The KDB 905462 D02 v02 Section 7.8.2 Performance Requirements Check was used. The sample configured to operate at 5290 MHz for 80 MHz bandwidth. The final results are indicated below.

Test Setup:

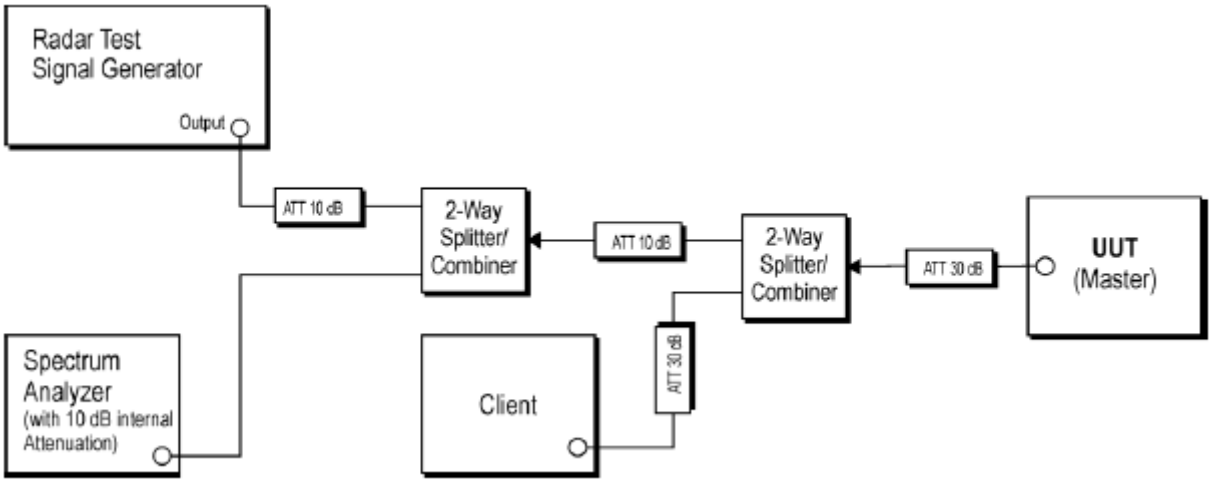

4.8.2 Results

As originally tested, the EUT was found to be compliant to the requirements of the test standard(s).

Table 13: Channel Availability Checks for 80 MHz Bandwidth – Test Results

Test Date: October 18, 2019				
Test Engineer: Donald Foster				
Test Method: conducted method		**Radar Test Waveform:** 0		
Center Frequency: 5290 MHz		**EUT State:** No traffic		
Min. Antenna Gain: +3.11 dBi		**Max. Transmitted Power:** +20 dBm.		
Required Threshold: -64 dBm		**Detection Threshold:** -63 dBm		
Ambient Temperature: 23°C		**Relative Humidity:** 42 %RH		
Performance	**Plots #**	**Limit**	**Results**	**Remark**
Power-up Cycle	15	N/A	Complies	Power-up time was measured 1.35 seconds.
Channel Availability Check Time	15	60s	Complies	Channel check time from 1.35 s to 61.35 s
Radar Injection near the beginning of CAC	16	150s	Complies	Injected at 4.35 seconds; 3 s into the CAC.
Radar Injection near the End of CAC	17	150s	Complies	Injected at 58.65 seconds; 55.35 s into the CAC.
Note: Manufacturer declared the power up time was 10 seconds after WiFi (5GHz) is up.				

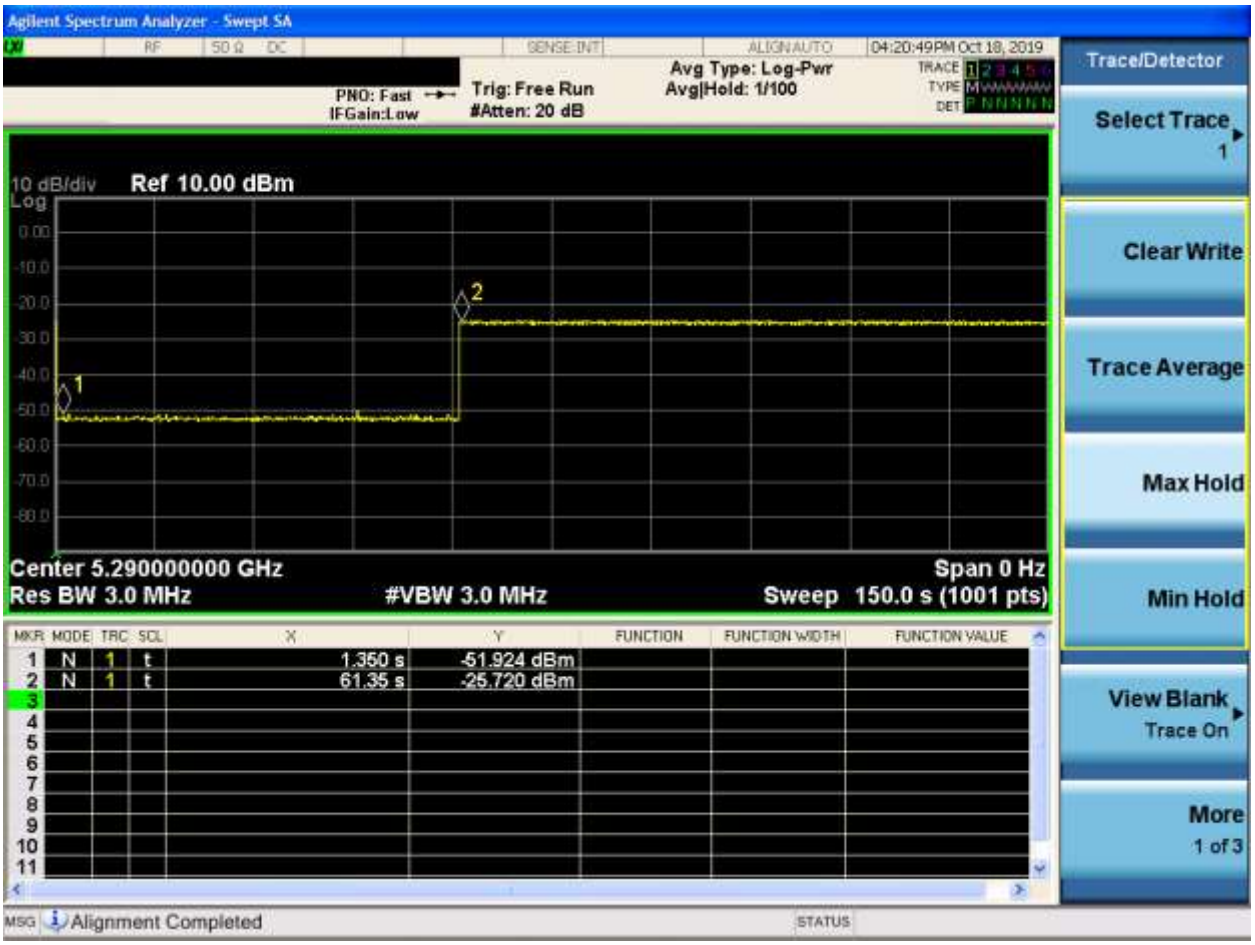

Figure 15: Initial Channel Availability Check for 80 MHz Bandwidth

Note: 1. Analyzer was trigger at the EUT' power up cycle.

2. Marker 1 is denoted end of power-up time and the start of 60 seconds channel availability check time.

3. Marker 2 is when EUT started to transmit at 61.35 seconds.

.

Figure 16: Radar Pulse Injection near the Beginning of Channel Availability Check for 80 MHz Bandwidth

Note: 1. The eero, Model J010001 has the power up time of 1.35 seconds.

2. The first 6 second of channel availability check would be between 1.35 s and 7.35 s.

3. A Waveform 0 Radar Burst is injected at 4.35 seconds.

4. No transmission occurred within 2.5 minutes after radar injection.

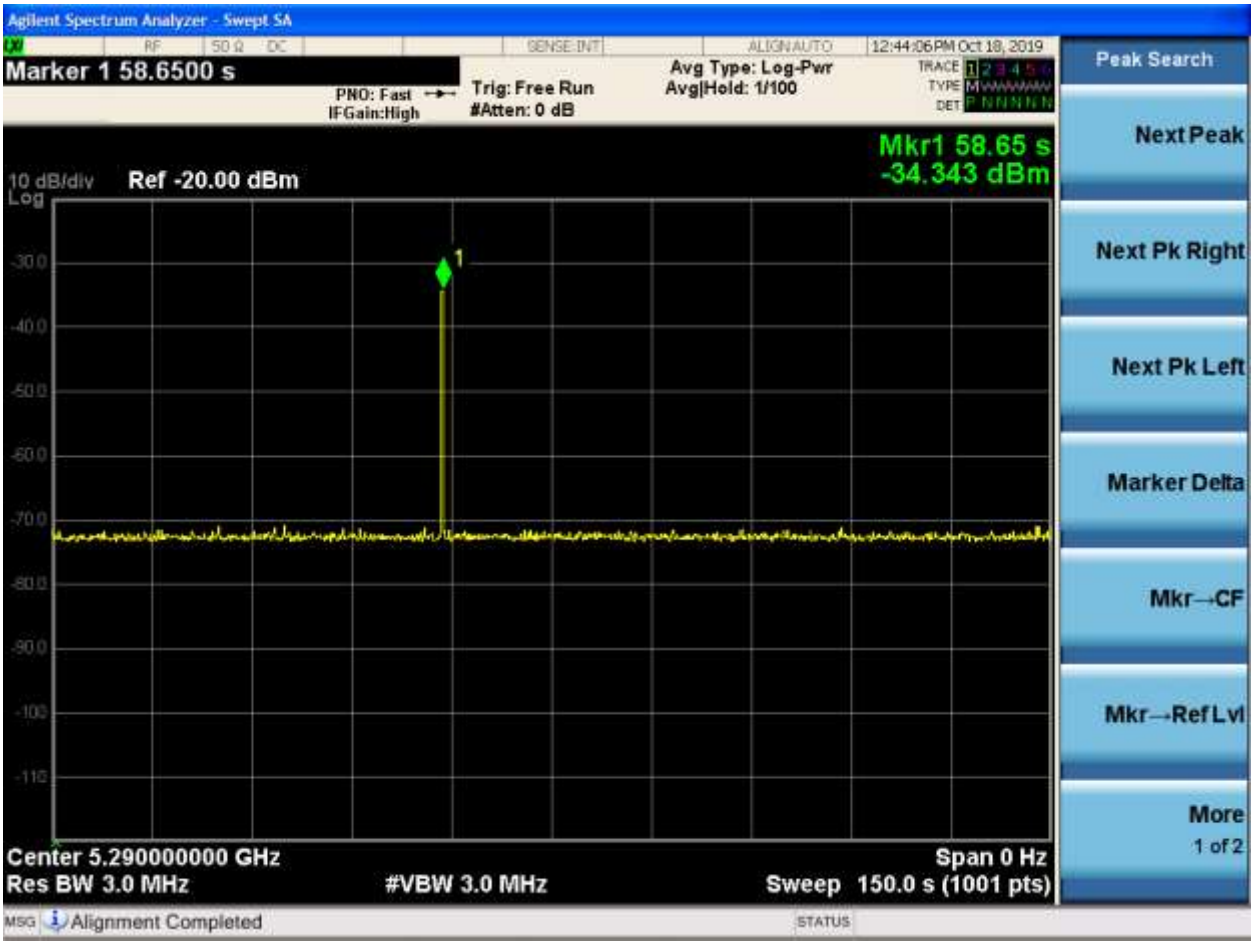

Figure 17: Radar Pulse Injection near the End of Channel Availability Check for 80 MHz Bandwidth

Note: 1. The eero, Model J010001 has the power up time of 1.35 seconds.

2. The last 6 second of channel availability check would be between 55.35 s and 61.35 s.

3. The single radar burst is injected at 58.65 seconds.

4. No transmission occurred within 2.5 minutes after radar injection.

4.9 In-Service Monitoring

In-service monitoring performance checks consist of the channel move time, channel closing transmission time, and non-occupancy period. These parameters of the eero, Model J010001 are verified to give the radar system the priority of the frequency and minimize the interference with nearby radar systems when the eero, Model J010001 is being used.

Upon the detection of radar signal on the operating channel, the equipment under test (EUT) must move to another operating channel with move time less than 10 seconds. The total channel closing transmission time must be 200 mS with an aggregate 60 mS over the remaining 10 second period. The radar detected channel must not have any transmission from EUT for the minimum of 30 minutes.

4.9.1 Test Method

The KDB 905462 D02 UNII DFS Compliance Procedure New Rules v02 Section 7.8.3 Performance Requirements Check was used.

The sample was used as master device and configured to operate at 5530 MHz for 80 MHz bandwidth. The final results are indicated below.

Test Setup:

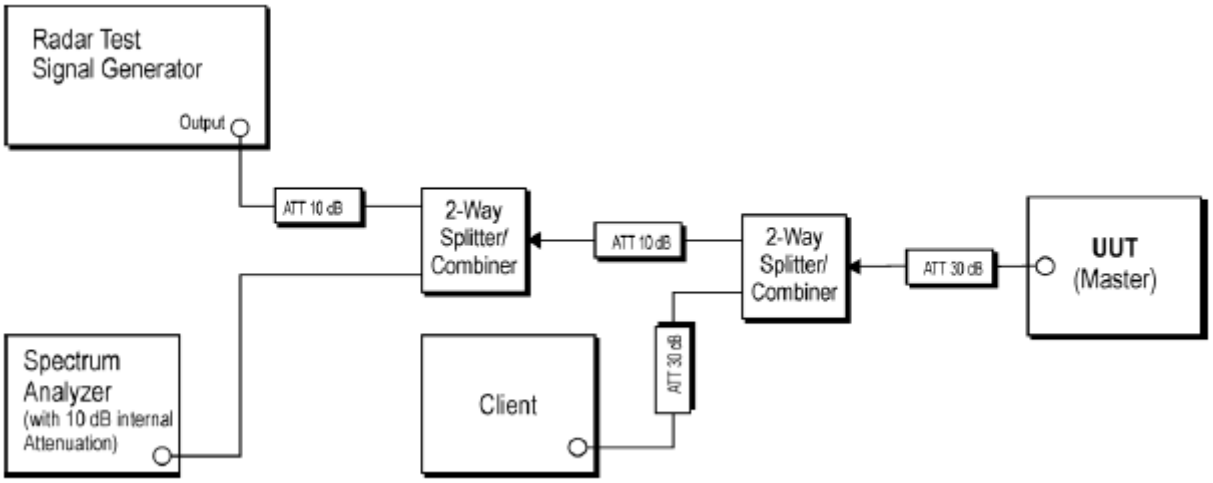

4.9.2 Results

As originally tested, the EUT was found to be compliant to the requirements of the test standard(s).

Table 14: In-Service Monitoring – Test Results

Test Date: November 19, 2019								
Test Method: conducted method								
Center Frequency: 5530 MHz				**EUT State:** data transfer continuously (iPerf app)				
Min. Antenna Gain: +3.11 dBi				**Max. Transmitted Power:** +20 dBm.				
Required Threshold: -64 dBm				**Detection Threshold:** -63 dBm				
Ambient Temperature: 23°C				**Relative Humidity:** 42 %RH				
Master Mode at 11ACVHT80, 80 MHz Bandwidth								
Waveform	**CCTT**		**CMT**		**Non-Occupancy**		**Plots**	**Results**
	Meas.	Limit	Meas.	Limit	Meas.	Limit		
Type 0	14.7 ms	260 ms	1.5 ms	10s	> 30min	30 min.	18,19,20	Complies

CCTT= Channel Closing Transmission Time.

CMT= Channel Move Time

Figure 18: Channel Move Time and Channel Closing Transmission Time using Pulse Radar Waveform 0 in Master Mode 11AC VHT80, 80 MHz Bandwidth

Note: Spectrum Analyzer was triggered to capture Waveform Type 0 radar pulse and EUT transmission afterward. The data transfer was paused about <1 second. The data transfer resumed with EUT operated at VHT80 Non-DFS Channel 155, 5775 MHz.

Figure 19: Channel Move Time and Channel Closing Transmission Time using Pulse Radar Waveform 0 for 80 MHz Bandwidth (Close-up)

Note: 1. Agilent PXA Analyzer was triggered with 40000 single sweep points (Bins). Fig. 20 is a zoom-in plot from Fig. 19.

2. The last radar pulse of Waveform Type 0 was denoted by Marker 1 at 23.85 ms

3. There are total 49 spectrum analyzer bins above the noise floor level after 23.85 ms.

CCTT = # Bins * (12000 mS / 40000 Bins)
= 49 bins * (12000 mS/ 40000 Bins)
= 14.7 mS.

4. Channel Move Time (CMT) is defined as the delta of EUT's last transmission to the last pulse of radar burst.

Last Radar Pulse = 23.85 mS
Last Transmission = 25.35 mS
Channel Move Time = Last Transmission – Last Radar Pulse = 1.50 ms

5. No transmission happened after 200 mS, no aggregate.

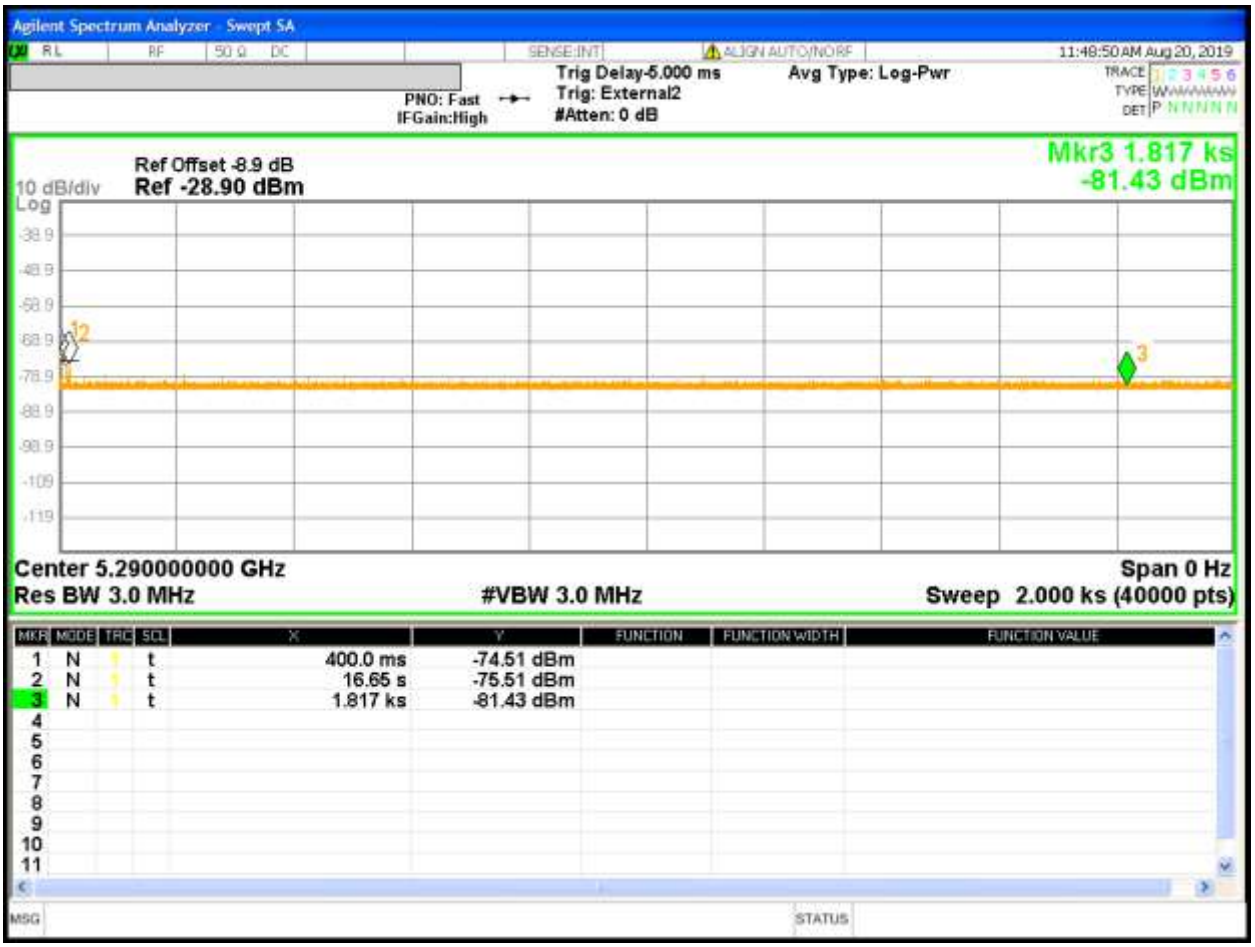

Figure 20: Non-Occupancy Period using Waveform Type 0 in Master Mode for 11AC VHT80, 80 MHz Bandwidth

Note: 1. Marker #1 denotes after the end of radar pulse.

2. Marker #2 denotes the 30 minutes limit on Channel 5290 MHz.

3. No transmission of 30 minutes after the last aggregates on the original channel.

4. EUT transmission moved to Channel 106 (5530 MHz).

4.10 Statistic Performance Check

All six radar waveforms identified under KDB 905462 D02 will applied to the U-NII device. Each waveform will be applied to the eero, Model J010001 for the minimum of 30 trials while data transferring continuously. The minimum percentage of detection and total aggregated percentage must meet the Table 5, 6, and 7 of KDB 905462 D02 requirements.

4.9.1 Test Method

The *KDB 905462 D02* Section 7.8.4 Performance Requirements Check was used for evaluating the eero, Model J010001. It configured to data transfer continuously in 802.11ac VHT20 at 5260 MHz, 802.11ac VHT40 at 5270 MHz, 802.11ac VHT80 at 5290 MHz. The data transfer at the client supporting laptop end. Each verified radar waveform per Section 4.4 of this report applied to the below coupling circuit. The final results are indicated below.

Test Setup:

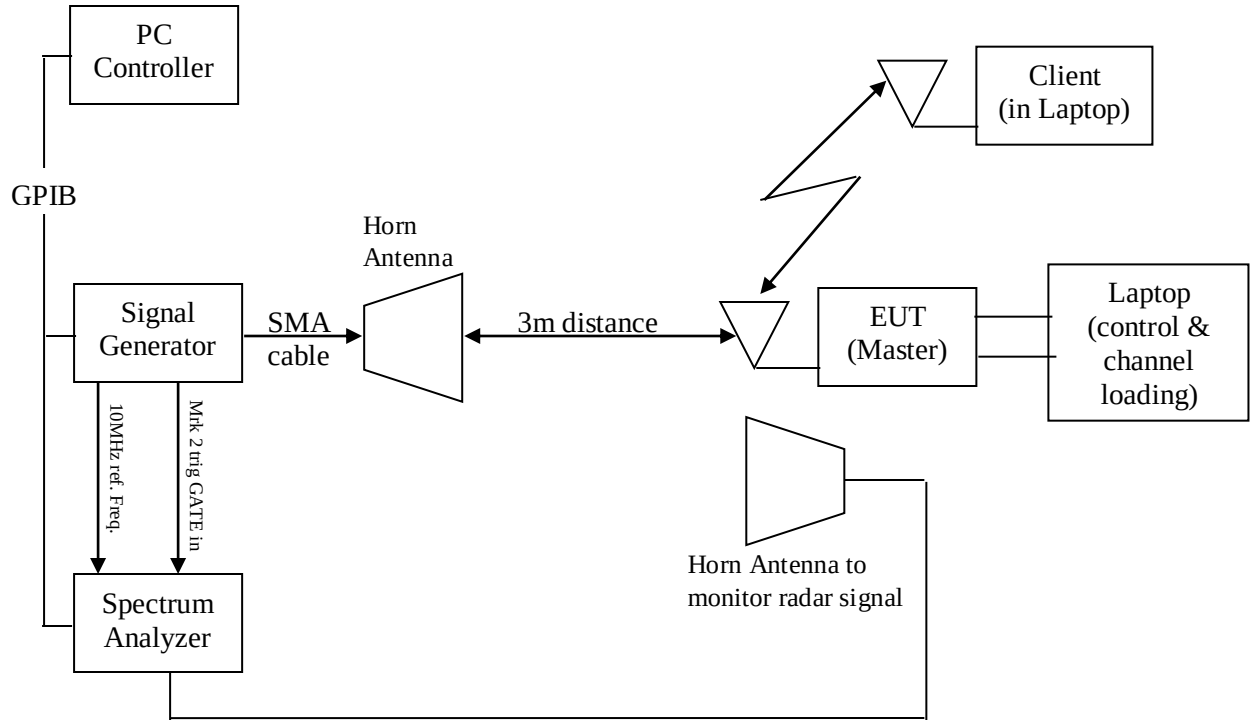

4.9.2 Results

As originally tested, the EUT was found to be compliant to the requirements of the test standard(s).

Table 15: Statistic Performance Checks for 20 MHz Bandwidth – Summary

Test Date: August 16-19, 2019	
Test Method: radiated method	
Center Frequency: 5260 MHz	**EUT State:** data transfer continuously (iPerf app)
Min. Antenna Gain: +3.11 dBi	**Max. Transmitted Power:** +20 dBm
Required Threshold: -64dBm	**Detection Threshold:** -63 dBm
Ambient Temperature: 23°C	**Relative Humidity:** 40% RH

Radar Type	# of Trials	# of Detection	Successful Detection (%)	Min. % of Successful Detection	Results
Waveform #1 (A/B)	30	29	97.0%	60%	Complies
Waveform #2	30	25	83.3%	60%	Complies
Waveform #3	30	27	83.3%	60%	Complies
Waveform #4	30	22	73.3%	60%	Complies
Aggregate (Radar Type 1 to 4)			88.4%	80%	Complies
Waveform #5	30	27	90.0%	80%	Complies
Waveform #6	30	29	96.7%	70%	Complies
Note: None.					

Table 16: Statistic Performance Checks for 40 MHz Bandwidth – Summary

Test Date: August 16-19, 2019	
Test Method: radiated method	
Center Frequency: 5270 MHz	**EUT State:** data transfer continuously (iPerf app)
Min. Antenna Gain: +3.11 dBi	**Max. Transmitted Power:** +20 dBm
Required Threshold: -64dBm	**Detection Threshold:** -63 dBm
Ambient Temperature: 23°C	**Relative Humidity:** 40% RH

Radar Type	# of Trials	# of Detection	Successful Detection (%)	Min. % of Successful Detection	Results
Waveform #1	30	29	96.7%	60%	Complies
Waveform #2	30	26	86.7%	60%	Complies
Waveform #3	30	22	73.3%	60%	Complies
Waveform #4	30	23	76.7%	60%	Complies
Aggregate (Radar Type 1 to 4)			83.4%	80%	Complies
Waveform #5	30	26	86.7%	80%	Complies
Waveform #6	30	30	100%	70%	Complies
Note: None.					

Table 17: Statistic Performance Checks for 80 MHz Bandwidth – Summary

Test Date: August 16-19, October 17, 2019	
Test Method: radiated method	
Center Frequency: 5290 MHz	**EUT State:** data transfer continuously (iPerf app)
Min. Antenna Gain: +4.86 dBi	**Max. Transmitted Power:** +20 dBm
Required Threshold: -64dBm	**Detection Threshold:** -63 dBm
Ambient Temperature: 23°C	**Relative Humidity:** 40% RH

Radar Type	# of Trials	# of Detection	Successful Detection (%)	Min. % of Successful Detection	Results
Waveform #1	30	28	93.3%	60%	Complies
Waveform #2	30	30	100%	60%	Complies
Waveform #3	30	27	90.0%	60%	Complies
Waveform #4	30	27	90.0%	60%	Complies
Aggregate (Radar Type 1 to 4)			89.2%	80%	Complies
Waveform #5	30	24	80.0%	80%	Complies
Waveform #6	30	30	100%	70%	Complies
Note: None.					

Table 18: Statistic Performance Check for 20 MHz Bandwidth - FCC Radar Type 1

FCC 905462 D02 New Rules v02					
Tester:	Kerwinn Corpuz				
Test Lab:	TUV Rheinland of North America, Inc.				
Date:	August 15, 2019				
Device:	eero, Model J010001				
Manufacturer:	eero				
Test:	data transfer continuously (iPerf app) at 5260 MHz, 11ACVHT20				
Rohde & Schwarz K350 Pulse Sequencer DFS - RADAR TYPE 1					
Trial #	**Test Freq. (MHz)**	**Nos. of Pulses per Burst**	**Pulse Width (µsec)**	**PRI (µs)**	**Detection (yes/no)**
1	5260	102	1	518	No
2	5259	92	1	578	Yes
3	5258	95	1	558	Yes
4	5257	67	1	798	Yes
5	5256	65	1	818	Yes
6	5255	59	1	898	Yes
7	5254	81	1	658	Yes
8	5253	70	1	758	Yes
9	5252	89	1	598	Yes
10	5251	61	1	878	Yes
11	5250	62	1	858	Yes
12	5261	78	1	678	Yes
13	5262	72	1	738	Yes
14	5263	83	1	638	Yes
15	5264	86	1	618	Yes
16	5265	18	1	3063	Yes
17	5266	19	1	2889	Yes
18	5267	31	1	1700	Yes
19	5268	47	1	1133	Yes
20	5269	21	1	2563	Yes
21	5270	18	1	3005	Yes
22	5250	43	1	1250	Yes
23	5251	22	1	2457	Yes
24	5252	57	1	936	Yes
25	5253	19	1	2790	Yes
26	5254	19	1	2868	Yes
27	5255	25	1	2190	Yes
28	5257	29	1	1868	Yes
29	5258	24	1	2246	Yes
30	5260	24	1	2271	Yes
Summary: 29 detections in 30 trials.					

Table 19: Statistic Performance Check for 40 MHz Bandwidth - FCC Radar Type 1

FCC 905462 D02 New Rules v02					
Tester:	Kerwinn Corpuz				
Test Lab:	TUV Rheinland of North America, Inc.				
Date:	August 16, 2019				
Device:	eero, Model J010001				
Manufacturer:	eero				
Test:	data transfer continuously (iPerf app) at 5270 MHz, 11ACVHT40				
Rohde & Schwarz K350 Pulse Sequencer - RADAR TYPE 1					
Trial #	**Test Freq. (MHz)**	**Nos. of Pulses per Burst**	**Pulse Width (µsec)**	**PRI (µs)**	**Detection (yes/no)**
1	5270	18	1	3066	Yes
2	5290	58	1	918	Yes
3	5289	68	1	778	Yes
4	5288	62	1	858	Yes
5	5287	57	1	938	Yes
6	5286	76	1	698	Yes
7	5285	92	1	578	Yes
8	5284	81	1	658	Yes
9	5283	74	1	718	Yes
10	5282	98	1	538	No
11	5281	72	1	738	Yes
12	5280	63	1	838	Yes
13	5279	83	1	638	Yes
14	5278	95	1	558	Yes
15	5277	86	1	618	Yes
16	5250	47	1	1139	Yes
17	5251	48	1	1104	Yes
18	5252	30	1	1797	Yes
19	5253	30	1	1768	Yes
20	5254	65	1	819	Yes
21	5255	47	1	1124	Yes
22	5256	21	1	2520	Yes
23	5257	27	1	1999	Yes
24	5258	59	1	902	Yes
25	5259	28	1	1947	Yes
26	5260	23	1	2308	Yes
27	5261	49	1	1092	Yes
28	5262	32	1	1683	Yes
29	5263	20	1	2752	Yes
30	5264	54	1	983	Yes
Summary: 29 detections in 30 trials.					

Table 20: Statistic Performance Check for 80 MHz Bandwidth - FCC Radar Type 1

FCC 905462 D02 New Rules v02					
Tester:	Kerwinn Corpuz				
Test Lab:	TUV Rheinland of North America, Inc.				
Date:	August 16, 2019				
Device:	eero, Model J010001				
Manufacturer:	eero				
Test:	data transfer continuously (iPerf app) at 5290 MHz, 11ACVHT80				
Rohde & Schwarz K350 Pulse Sequencer - RADAR TYPE 1					
Trial #	**Test Freq. (MHz)**	**Nos. of Pulses per Burst**	**Pulse Width (µsec)**	**PRI (µs)**	**Detection (yes/no)**
1	5290	68	1	778	Yes
2	5295	102	1	518	Yes
3	5300	59	1	898	Yes
4	5305	58	1	918	Yes
5	5310	62	1	858	Yes
6	5320	95	1	558	Yes
7	5325	89	1	598	Yes
8	5330	83	1	638	Yes
9	5285	65	1	818	Yes
10	5280	63	1	838	Yes
11	5275	70	1	758	Yes
12	5270	72	1	738	Yes
13	5265	74	1	718	No
14	5260	61	1	878	Yes
15	5255	76	1	698	Yes
16	5250	88	1	602	No
17	5292	31	1	1754	Yes
18	5294	36	1	1464	Yes
19	5298	25	1	2153	Yes
20	5303	46	1	1156	Yes
21	5328	35	1	1522	Yes
22	5322	26	1	2027	Yes
23	5326	31	1	1704	Yes
24	5288	19	1	2866	Yes
25	5286	24	1	2240	Yes
26	5282	31	1	1736	Yes
27	5277	31	1	1709	Yes
28	5252	29	1	1856	Yes
29	5258	26	1	2048	Yes
30	5254	75	1	712	Yes
Summary: 30 detections in 30 trials.					

Table 21: Statistic Performance Check for 20 MHz Bandwidth - FCC Radar Type 2

FCC 905462 D02 New Rules v02					
Tester:	Kerwinn Corpuz				
Test Lab:	TUV Rheinland of North America, Inc.				
Date:	August 16, 2019				
Device:	eero, Model J010001				
Manufacturer:	eero				
Test:	data transfer continuously (iPerf app) at 5260 MHz, 11ACVHT20				
Rohde & Schwarz K350 Pulse Sequencer DFS - RADAR TYPE 2					
Trial #	**Test Freq. (MHz)**	**Nos. of Pulses per Burst**	**Pulse Width (µsec)**	**PRI (µs)**	**Detection (yes/no)**
1	5260	26	4.9	221	Yes
2	5261	28	2.3	207	Yes
3	5262	28	3.4	160	Yes
4	5263	25	4.7	166	Yes
5	5264	28	2.1	150	No
6	5265	28	3.7	155	Yes
7	5266	29	4.8	216	Yes
8	5267	29	1.2	197	No
9	5269	28	3.9	151	Yes
10	5269	27	4.7	170	Yes
11	5270	27	2.2	174	Yes
12	5251	28	3.8	209	No
13	5251	29	4.2	192	Yes
14	5252	27	2.8	205	Yes
15	5253	29	1.1	172	Yes
16	5254	25	4.1	176	Yes
17	5255	27	3.7	184	Yes
18	5256	24	4.9	170	Yes
19	5257	25	2.3	156	Yes
20	5258	24	3.8	179	Yes
21	5259	27	3.5	158	Yes
22	5250	27	4	223	Yes
23	5251	23	2.8	215	Yes
24	5252	25	3	206	No
25	5253	28	1.5	165	Yes
26	5254	27	2.1	205	Yes
27	5269	26	2.7	216	Yes
28	5269	27	3.1	210	No
29	5268	28	4.6	206	Yes
30	5267	28	3.2	170	Yes
Summary: 25 detections in 30 trials.					

Table 22: Statistic Performance Check for 40 MHz Bandwidth - FCC Radar Type 2

FCC 905462 D02 New Rules v02					
Tester:	Kerwinn Corpuz				
Test Lab:	TUV Rheinland of North America, Inc.				
Date:	August 16, 2019				
Device:	eero, Model J010001				
Manufacturer:	eero				
Test:	data transfer continuously (iPerf app) at 5270 MHz, 11ACVHT40				
Rohde & Schwarz K350 Pulse Sequencer DFS - RADAR TYPE 2					
Trial #	**Test Freq. (MHz)**	**Nos. of Pulses per Burst**	**Pulse Width (µsec)**	**PRI (µs)**	**Detection (yes/no)**
1	5270	26	4.1	230	Yes
2	5290	27	4.6	212	No
3	5289	27	2.2	203	Yes
4	5288	29	2.8	205	Yes
5	5287	26	3.8	169	Yes
6	5286	25	2.5	154	Yes
7	5285	24	4.8	181	Yes
8	5284	26	2.4	156	Yes
9	5283	25	4.9	222	Yes
10	5282	25	2.6	187	Yes
11	5281	25	1.8	160	Yes
12	5280	24	3.3	166	Yes
13	5279	29	1.4	212	Yes
14	5278	29	3.3	166	Yes
15	5277	24	1	176	Yes
16	5262	29	2.7	204	Yes
17	5261	29	4.3	150	Yes
18	5260	29	2.3	201	Yes
19	5259	27	3.2	165	Yes
20	5258	27	4.2	202	No
21	5257	25	3.9	174	Yes
22	5256	23	3.2	223	Yes
23	5255	25	4.9	159	No
24	5254	25	4.2	173	No
25	5253	25	1.8	227	Yes
26	5252	24	2.6	213	Yes
27	5251	24	3.2	209	Yes
28	5250	27	2.9	154	Yes
29	5267	26	2.8	218	Yes
30	5273	24	3.9	156	Yes
Summary: 26 detections in 30 trials.					

Table 23: Statistic Performance Check for 80 MHz Bandwidth - FCC Radar Type 2

FCC 905462 D02 New Rules v02					
Tester:	Kerwinn Corpuz				
Test Lab:	TUV Rheinland of North America, Inc.				
Date:	August 16, 2019				
Device:	eero, Model J010001				
Manufacturer:	eero				
Test:	data transfer continuously (iPerf app) at 5290 MHz, 11ACVHT80				
Rohde & Schwarz K350 Pulse Sequencer DFS - RADAR TYPE 2					
Trial #	**Test Freq. (MHz)**	**Nos. of Pulses per Burst**	**Pulse Width (µsec)**	**PRI (µs)**	**Detection (yes/no)**
1	5290	25	2.1	177	Yes
2	5295	28	3.5	167	Yes
3	5300	26	1.9	209	Yes
4	5305	23	1.7	206	Yes
5	5310	29	2.2	199	Yes
6	5320	28	2.7	219	Yes
7	5325	24	1.8	187	Yes
8	5330	28	2.8	221	Yes
9	5285	25	4	191	Yes
10	5280	25	2.4	174	Yes
11	5275	27	5	201	Yes
12	5270	26	3.8	198	Yes
13	5265	23	3.2	168	Yes
14	5260	25	4.1	210	Yes
15	5255	23	2.8	175	Yes
16	5250	26	3.2	188	Yes
17	5292	25	3.4	181	Yes
18	5294	26	5	173	Yes
19	5298	23	3.5	206	Yes
20	5303	25	1.1	209	Yes
21	5328	26	2.2	230	Yes
22	5322	25	3.3	204	Yes
23	5326	26	2	213	Yes
24	5288	28	1.5	218	Yes
25	5286	28	4.4	154	Yes
26	5282	25	1.4	196	Yes
27	5277	28	4.6	220	Yes
28	5252	24	1	172	Yes
29	5258	25	2.7	171	Yes
30	5254	26	1.5	165	Yes
Summary: 30 detections in 30 trials.					

Table 24: Statistic Performance Check for 20 MHz Bandwidth - FCC Radar Type 3

FCC 905462 D02 New Rules v02					
Tester:	Kerwinn Corpuz				
Test Lab:	TUV Rheinland of North America, Inc.				
Date:	August 16, 2019				
Device:	eero, Model J010001				
Manufacturer:	eero				
Test:	data transfer continuously (iPerf app) at 5260 MHz, 11ACVHT20				
Rohde & Schwarz K350 Pulse Sequencer DFS - RADAR TYPE 3					
Trial #	**Test Freq. (MHz)**	**Nos. of Pulses per Burst**	**Pulse Width (µsec)**	**PRI (µs)**	**Detection (yes/no)**
1	5260	16	7.6	437	Yes
2	5261	16	8.3	251	Yes
3	5262	17	10	432	Yes
4	5263	17	6.9	257	Yes
5	5264	18	8.9	486	No
6	5265	17	6.6	210	Yes
7	5266	16	6.3	295	Yes
8	5267	17	7.3	485	Yes
9	5268	16	8.3	202	Yes
10	5269	17	7.4	399	Yes
11	5251	18	7.6	414	Yes
12	5251	16	9.2	335	Yes
13	5252	18	8.3	425	Yes
14	5253	18	8.2	403	Yes
15	5254	17	7.4	242	No
16	5255	18	9	478	No
17	5256	17	8.3	344	Yes
18	5257	17	8.9	225	No
19	5258	16	6.5	493	Yes
20	5259	18	9.1	207	Yes
21	5258	16	6.9	322	Yes
22	5251	18	9.9	378	No
23	5252	18	7.4	377	Yes
24	5253	17	6.3	250	Yes
25	5254	18	7.3	468	Yes
26	5269	17	6.6	259	Yes
27	5269	16	6.3	457	Yes
28	5268	17	6.3	384	Yes
29	5267	17	6.6	402	Yes
30	5266	16	7.6	456	Yes
Summary: 25 detections in 30 trials.					

Table 25: Statistic Performance Check for 40 MHz Bandwidth - FCC Radar Type 3

FCC 905462 D02 New Rules v02					
Tester:	Kerwinn Corpuz				
Test Lab:	TUV Rheinland of North America, Inc.				
Date:	August 16, 2019				
Device:	eero, Model J010001				
Manufacturer:	eero				
Test:	data transfer continuously (iPerf app) at 5270 MHz, 11ACVHT40				
Rohde & Schwarz K350 Pulse Sequencer DFS - RADAR TYPE 3					
Trial #	**Test Freq. (MHz)**	**Nos. of Pulses per Burst**	**Pulse Width (µsec)**	**PRI (µs)**	**Detection (yes/no)**
1	5270	17	9.2	262	Yes
2	5289	16	8.3	223	No
3	5288	16	9.5	306	Yes
4	5287	17	6.4	458	Yes
5	5286	18	8.9	392	Yes
6	5285	18	7.6	326	No
7	5284	17	10	459	Yes
8	5283	17	8.1	330	No
9	5282	16	8.1	298	Yes
10	5281	17	8.3	216	Yes
11	5280	16	8.2	456	Yes
12	5279	16	8.4	332	Yes
13	5278	16	9.5	341	Yes
14	5277	17	8.2	387	Yes
15	5276	17	7.4	250	Yes
16	5275	17	9.2	268	Yes
17	5274	16	8.3	435	No
18	5259	16	7.6	392	Yes
19	5258	17	6.2	241	Yes
20	5257	17	10	379	Yes
21	5256	18	9	215	Yes
22	5255	16	6.2	338	No
23	5254	17	7.9	225	No
24	5253	17	7	318	No
25	5252	17	9	252	Yes
26	5251	17	9.2	360	Yes
27	5251	17	8.5	396	Yes
28	5271	16	9.6	422	No
29	5272	18	9.6	352	Yes
30	5273	18	9.7	435	Yes
Summary: 22 detections in 30 trials.					

Table 26: Statistic Performance Check for 80 MHz Bandwidth - FCC Radar Type 3

FCC 905462 D02 New Rules v02					
Tester:	Kerwinn Corpuz				
Test Lab:	TUV Rheinland of North America, Inc.				
Date:	August 16, 2019				
Device:	eero, Model J010001				
Manufacturer:	eero				
Test:	data transfer continuously (iPerf app) at 5290 MHz, 11ACVHT80				
Rohde & Schwarz K350 Pulse Sequencer DFS - RADAR TYPE 3					
Trial #	**Test Freq. (MHz)**	**Nos. of Pulses per Burst**	**Pulse Width (µsec)**	**PRI (µs)**	**Detection (yes/no)**
1	5290	16	6.5	340	Yes
2	5295	17	8.4	280	Yes
3	5300	18	8.7	446	Yes
4	5305	17	9.1	234	Yes
5	5310	16	6	211	Yes
6	5320	18	9.8	418	Yes
7	5325	16	9	312	No
8	5330	16	6.6	455	Yes
9	5285	17	6.2	444	Yes
10	5280	17	7.3	433	Yes
11	5275	17	9.3	211	Yes
12	5270	17	9.9	363	Yes
13	5265	17	8.3	366	Yes
14	5260	18	6.6	386	Yes
15	5255	17	7.5	475	Yes
16	5250	17	6.4	282	Yes
17	5292	17	9.9	385	Yes
18	5294	17	7.3	278	Yes
19	5298	17	7.7	445	Yes
20	5303	16	8.8	299	Yes
21	5328	18	6.1	462	Yes
22	5322	17	8.5	354	Yes
23	5326	18	6.2	348	Yes
24	5288	18	6.9	256	Yes
25	5286	17	7.5	223	Yes
26	5282	17	8.8	349	No
27	5277	17	9.5	216	Yes
28	5252	17	6.5	259	Yes
29	5258	17	9.4	230	No
30	5254	17	6.1	293	Yes
Summary: 27 detections in 30 trials.					

Table 27: Statistic Performance Check for 20 MHz Bandwidth - FCC Radar Type 4

FCC 905462 D02 New Rules v02					
Tester:	Kerwinn Corpuz				
Test Lab:	TUV Rheinland of North America, Inc.				
Date:	August 19, 2019				
Device:	eero, Model J010001				
Manufacturer:	eero				
Test:	data transfer continuously (iPerf app) at 5260 MHz, 11ACVHT20				
Rohde & Schwarz K350 Pulse Sequencer DFS - RADAR TYPE 4					
Trial #	**Test Freq. (MHz)**	**Nos. of Pulses per Burst**	**Pulse Width (µsec)**	**PRI (µs)**	**Detection (yes/no)**
1	5260	14	16.6	408	Yes
2	5261	13	17.8	431	Yes
3	5262	14	16.9	218	No
4	5263	14	16	316	No
5	5264	15	17.4	365	No
6	5265	16	19.2	497	Yes
7	5266	15	18.3	377	Yes
8	5267	14	12.6	498	Yes
9	5268	15	13.9	403	No
10	5269	15	13.8	230	Yes
11	5251	14	14.7	200	No
12	5252	15	16.4	318	Yes
13	5253	12	18	217	Yes
14	5254	14	15.1	263	No
15	5251	13	15.8	288	Yes
16	5255	16	18.9	334	Yes
17	5256	13	17.1	371	Yes
18	5257	12	19.4	385	Yes
19	5258	16	11	427	Yes
20	5259	13	14.4	331	Yes
21	5258	14	13.1	263	Yes
22	5251	14	12.9	335	Yes
23	5252	13	13.9	362	Yes
24	5253	13	12.3	459	Yes
25	5254	13	19.6	277	Yes
26	5269	12	13.7	390	No
27	5269	13	19.3	286	Yes
28	5268	15	15.1	250	No
29	5267	14	16.1	217	Yes
30	5266	13	12.4	496	Yes
Summary: 22 detections in 30 trials.					

Table 28: Statistic Performance Check for 40 MHz Bandwidth - FCC Radar Type 4

FCC 905462 D02 New Rules v02					
Tester:	Kerwinn Corpuz				
Test Lab:	TUV Rheinland of North America, Inc.				
Date:	August 19, 2019				
Device:	eero, Model J010001				
Manufacturer:	eero				
Test:	data transfer continuously (iPerf app) at 5270 MHz, 11ACVHT40				
Rohde & Schwarz K350 Pulse Sequencer DFS - RADAR TYPE 4					
Trial #	**Test Freq. (MHz)**	**Nos. of Pulses per Burst**	**Pulse Width (µsec)**	**PRI (µs)**	**Detection (yes/no)**
1	5270	14	18.2	392	Yes
2	5289	15	17.7	283	Yes
3	5288	13	17.4	222	Yes
4	5287	16	19.8	273	Yes
5	5286	14	19.7	289	Yes
6	5285	12	18.9	441	Yes
7	5284	16	17.7	377	Yes
8	5283	15	14	486	Yes
9	5282	13	16.2	295	No
10	5281	16	13.9	477	Yes
11	5280	16	17.2	396	No
12	5279	15	18.5	210	No
13	5278	16	17.7	414	Yes
14	5277	15	15.5	386	Yes
15	5276	16	18	281	Yes
16	5275	16	19.1	402	Yes
17	5274	13	17.6	439	Yes
18	5259	13	14.6	250	Yes
19	5258	15	19.3	305	No
20	5257	13	16.5	299	No
21	5256	12	13.2	457	Yes
22	5255	13	16.1	302	Yes
23	5254	14	19.2	312	Yes
24	5253	16	17.2	418	Yes
25	5252	16	12.7	296	No
26	5251	16	16.7	389	Yes
27	5251	14	15.1	308	No
28	5271	13	19.2	486	Yes
29	5272	14	11	214	Yes
30	5273	15	12.6	422	Yes
Summary: 23 detections in 30 trials.					

Table 29: Statistic Performance Check for 80 MHz Bandwidth - FCC Radar Type 4

FCC 905462 D02 New Rules v02					
Tester:	Kerwinn Corpuz				
Test Lab:	TUV Rheinland of North America, Inc.				
Date:	August 19, 2019				
Device:	eero, Model J010001				
Manufacturer:	eero				
Test:	data transfer continuously (iPerf app) at 5290 MHz, 11ACVHT80				
Rohde & Schwarz K350 Pulse Sequencer DFS - RADAR TYPE 4					
Trial #	**Test Freq. (MHz)**	**Nos. of Pulses per Burst**	**Pulse Width (µsec)**	**PRI (µs)**	**Detection (yes/no)**
1	5290	13	18.4	453	No
2	5295	15	15.2	375	Yes
3	5300	15	13.5	488	Yes
4	5305	15	18.8	495	Yes
5	5310	15	15.4	223	Yes
6	5320	13	12.6	347	Yes
7	5325	15	18.6	499	Yes
8	5330	16	15.5	308	Yes
9	5285	13	19.9	374	Yes
10	5280	14	15.5	428	Yes
11	5275	14	16.6	406	Yes
12	5270	13	17.1	227	Yes
13	5265	14	13.4	465	Yes
14	5260	14	19.4	230	Yes
15	5255	14	18.7	256	Yes
16	5250	15	15	282	Yes
17	5295	13	18	413	Yes
18	5294	16	11.8	495	Yes
19	5298	15	12.3	223	Yes
20	5303	12	14.7	254	No
21	5328	16	11	460	Yes
22	5322	13	12.3	254	Yes
23	5326	16	19.4	405	Yes
24	5288	15	16.7	271	Yes
25	5286	15	17.3	399	Yes
26	5282	14	19.6	225	Yes
27	5277	13	18.6	298	Yes
28	5252	16	18.8	275	Yes
29	5258	14	11.1	422	Yes
30	5254	14	17.4	242	No
Summary: 27 detections in 30 trials.					

Table 30: Statistic Performance Check for FCC Radar Type 5 for 20 MHz Bandwidth

FCC 905462 D02 New Rules v02				
Tester:	Kerwinn Corpuz			
Test Lab:	TUV Rheinland of North America, Inc.			
Date:	August 19, 2019			
Device:	eero, Model J010001			
Manufacturer:	eero			
Test:	data transfer continuously (iPerf app) at 5260 MHz, 11ACVHT20			
Center Freq. 5260 MHz	**Occ. BW Lower Freq.** 5252.1 MHz	**Occ. BW Upper Freq.** 5267.9 MHz		
Rohde & Schwarz K350 Pulse Sequencer DFS - RADAR TYPE 5				
Trial #	**Center Freq. (MHz)**	**Chirp Width (MHz)**	**Subset**	**Detection (yes/no)**
1	5260	20	1	Yes
2	5260	17	1	No
3	5260	9	1	No
4	5260	13	1	Yes
5	5260	18	1	Yes
6	5260	6	1	Yes
7	5260	20	1	Yes
8	5260	5	1	Yes
9	5260	8	1	Yes
10	5260	7	1	Yes
11	5254	5	2	Yes
12	5255.6	9	2	Yes
13	5256.4	11	2	Yes
14	5257.2	13	2	Yes
15	5256.8	12	2	Yes
16	5258.8	17	2	Yes
17	5254.8	7	2	Yes
18	5257.2	13	2	Yes
19	5257.2	13	2	Yes
20	5256.8	12	2	Yes
21	5260.4	19	3	Yes
22	5262.8	13	3	Yes
23	5264.4	9	3	No
24	5262	15	3	Yes
25	5265.6	6	3	Yes
26	5262.4	14	3	Yes
27	5263.2	12	3	Yes
28	5265.2	7	3	Yes
29	5263.6	11	3	Yes
30	5262	15	3	Yes
Summary: 27 detections in 30 trials. See Appendix A for Type 5 Radar Pulse details.				

Table 31: Statistic Performance Check for FCC Radar Type 5 for 40 MHz Bandwidth

FCC 905462 D02 New Rules v02				
Tester:	Kerwinn Corpuz			
Test Lab:	TUV Rheinland of North America, Inc.			
Date:	August 19, 2019			
Device:	eero, Model J010001			
Manufacturer:	eero			
Test:	data transfer continuously (iPerf app) at 5270 MHz, 11ACVHT40			
Center Freq. 5270 MHz	**Occ. BW Lower Freq.** 5254 MHz	**Occ. BW Upper Freq.** 5286 MHz		
Rohde & Schwarz K350 Pulse Sequencer DFS - RADAR TYPE 5				
Trial #	**Center Freq. (MHz)**	**Chirp Width (MHz)**	**Subset**	**Detection (yes/no)**
1	5270	9	1	Yes
2	5270	7	1	Yes
3	5270	15	1	Yes
4	5270	15	1	No
5	5270	9	1	Yes
6	5270	18	1	Yes
7	5270	6	1	Yes
8	5270	5	1	Yes
9	5270	10	1	No
10	5270	5	1	Yes
11	5256	5	2	No
12	5260.4	16	2	Yes
13	5257.6	9	2	Yes
14	5256.4	6	2	No
15	5256.4	6	2	Yes
16	5256	5	2	Yes
17	5256	5	2	Yes
18	5258	10	2	Yes
19	5259.2	13	2	Yes
20	5257.2	8	2	Yes
21	5280.8	13	3	Yes
22	5280.4	14	3	Yes
23	5280	15	3	Yes
24	5282	10	3	Yes
25	5278.8	18	3	Yes
26	5281.6	11	3	Yes
27	5280	15	3	Yes
28	5278.4	19	3	Yes
29	5279.2	17	3	Yes
30	5283.2	7	3	Yes
Summary: 26 detections in 30 trials. See Appendix A for Type 5 Radar Pulse details.				

Table 32: Statistic Performance Check for FCC Radar Type 5 for 80 MHz Bandwidth

FCC 905462 D02 New Rules v02				
Tester:	Donald Foster			
Test Lab:	TUV Rheinland of North America, Inc.			
Date:	October 17, 2019			
Device:	eero, Model J010001			
Manufacturer:	eero			
Test:	data transfer continuously (iPerf app) at 5530 MHz, 11ACVHT80			
Center Freq. 5530 MHz	**Occ. BW Lower Freq.** 5493.0 MHz	**Occ. BW Upper Freq.** 5568.0 MHz		
Rohde & Schwarz K350 Pulse Sequencer DFS - RADAR TYPE 5				
Trial #	**Center Freq. (MHz)**	**Chirp Width (MHz)**	**Subset**	**Detection (yes/no)**
1	5530	10	1	Yes
2	5530	19	1	Yes
3	5530	8	1	Yes
4	5530	15	1	No
5	5530	13	1	Yes
6	5530	18	1	No
7	5530	7	1	Yes
8	5530	16	1	No
9	5530	13	1	Yes
10	5530	19	1	No
11	5496.1	9	2	Yes
12	5498.5	15	2	No
13	5499.3	17	2	No
14	5499.7	18	2	Yes
15	5497.7	13	2	Yes
16	5496.9	11	2	Yes
17	5497.7	13	2	Yes
18	5495.7	8	2	Yes
19	5498.1	14	2	Yes
20	5495.3	7	2	Yes
21	5563.5	10	3	Yes
22	5563.5	10	3	Yes
23	5561.5	15	3	Yes
24	5563.5	10	3	Yes
25	5565.5	5	3	Yes
26	5561.1	16	3	Yes
27	5560.7	17	3	Yes
28	5562.3	13	3	Yes
29	5561.9	14	3	Yes
30	5559.5	20	3	Yes
Summary: 24 detections in 30 trials. See Appendix A for Type 5 Radar Pulse details.				

Table 33: Statistic Performance Check for FCC Radar Type 6 for 20 MHz Bandwidth

FCC 905462 D02 New Rules v02		
Tester:	Kerwinn Corpuz	
Test Lab:	TUV Rheinland of North America, Inc.	
Date:	August 19, 2019	
Device:	eero, Model J010001	
Manufacturer:	eero	
Test:	data transfer continuously (iPerf app) at 5260 MHz, 11ACVHT20	
Rohde & Schwarz K350 Pulse Sequencer DFS - RADAR TYPE 6		
Trial #	**Radar Type 6 Files**	**Detection (yes/no)**
1	20MHZ-T6-TRIAL-1	Yes
2	20MHZ-T6-TRIAL-2	Yes
3	20MHZ-T6-TRIAL-3	Yes
4	20MHZ-T6-TRIAL-4	Yes
5	20MHZ-T6-TRIAL-5	Yes
6	20MHZ-T6-TRIAL-6	Yes
7	20MHZ-T6-TRIAL-7	Yes
8	20MHZ-T6-TRIAL-8	Yes
9	20MHZ-T6-TRIAL-9	Yes
10	20MHZ-T6-TRIAL-10	Yes
11	20MHZ-T6-TRIAL-11	Yes
12	20MHZ-T6-TRIAL-12	Yes
13	20MHZ-T6-TRIAL-13	Yes
14	20MHZ-T6-TRIAL-14	Yes
15	20MHZ-T6-TRIAL-15	Yes
16	20MHZ-T6-TRIAL-16	Yes
17	20MHZ-T6-TRIAL-17	Yes
18	20MHZ-T6-TRIAL-18	Yes
19	20MHZ-T6-TRIAL-19	No
20	20MHZ-T6-TRIAL-20	Yes
21	20MHZ-T6-TRIAL-21	Yes
22	20MHZ-T6-TRIAL-22	Yes
23	20MHZ-T6-TRIAL-23	Yes
24	20MHZ-T6-TRIAL-24	Yes
25	20MHZ-T6-TRIAL-25	Yes
26	20MHZ-T6-TRIAL-26	Yes
27	20MHZ-T6-TRIAL-27	Yes
28	20MHZ-T6-TRIAL-28	Yes
29	20MHZ-T6-TRIAL-29	Yes
30	20MHZ-T6-TRIAL-30	Yes
Summary: 29 detections in 30 trials. See Appendix A for Type 6 Radar Pulse hopping patterns.		

Table 34: Statistic Performance Check for FCC Radar Type 6 for 40 MHz Bandwidth

FCC 905462 D02 New Rules v02		
Tester:	Kerwinn Corpuz	
Test Lab:	TUV Rheinland of North America, Inc.	
Date:	August 19, 2019	
Device:	eero, Model J010001	
Manufacturer:	eero	
Test:	data transfer continuously (iPerf app) at 5270 MHz, 11ACVHT40	
Rohde & Schwarz K350 Pulse Sequencer - RADAR TYPE 6		
Trial #	**Radar Type 6 Files**	**Detection (yes/no)**
1	40MHZ-T6-TRIAL-1	Yes
2	40MHZ-T6-TRIAL-2	Yes
3	40MHZ-T6-TRIAL-3	Yes
4	40MHZ-T6-TRIAL-4	Yes
5	40MHZ-T6-TRIAL-5	Yes
6	40MHZ-T6-TRIAL-6	Yes
7	40MHZ-T6-TRIAL-7	Yes
8	40MHZ-T6-TRIAL-8	Yes
9	40MHZ-T6-TRIAL-9	Yes
10	40MHZ-T6-TRIAL-10	Yes
11	40MHZ-T6-TRIAL-11	Yes
12	40MHZ-T6-TRIAL-12	Yes
13	40MHZ-T6-TRIAL-13	Yes
14	40MHZ-T6-TRIAL-14	Yes
15	40MHZ-T6-TRIAL-15	Yes
16	40MHZ-T6-TRIAL-16	Yes
17	40MHZ-T6-TRIAL-17	Yes
18	40MHZ-T6-TRIAL-18	Yes
19	40MHZ-T6-TRIAL-19	Yes
20	40MHZ-T6-TRIAL-20	Yes
21	40MHZ-T6-TRIAL-21	Yes
22	40MHZ-T6-TRIAL-22	Yes
23	40MHZ-T6-TRIAL-23	Yes
24	40MHZ-T6-TRIAL-24	Yes
25	40MHZ-T6-TRIAL-25	Yes
26	40MHZ-T6-TRIAL-26	Yes
27	40MHZ-T6-TRIAL-27	Yes
28	40MHZ-T6-TRIAL-28	Yes
29	40MHZ-T6-TRIAL-29	Yes
30	40MHZ-T6-TRIAL-30	Yes
Summary: 30 detections in 30 trials. See Appendix A for Type 6 Radar Pulse hopping patterns.		

Table 35: Statistic Performance Check for FCC Radar Type 6 for 80 MHz Bandwidth

FCC 905462 D02 New Rules v02		
Tester:	Donald Foster	
Test Lab:	TUV Rheinland of North America, Inc.	
Date:	October 17, 2019	
Device:	eero, Model J010001	
Manufacturer:	eero	
Test:	data transfer continuously (iPerf app) at 5530 MHz, 11ACVHT80	
Rohde & Schwarz K350 Pulse Sequencer - RADAR TYPE 6		
Trial #	**Radar Type 6 Files**	**Detection (yes/no)**
1	80MHZ-T6-TRIAL-1	Yes
2	80MHZ-T6-TRIAL-2	Yes
3	80MHZ-T6-TRIAL-3	Yes
4	80MHZ-T6-TRIAL-4	Yes
5	80MHZ-T6-TRIAL-5	Yes
6	80MHZ-T6-TRIAL-6	Yes
7	80MHZ-T6-TRIAL-7	Yes
8	80MHZ-T6-TRIAL-8	Yes
9	80MHZ-T6-TRIAL-9	Yes
10	80MHZ-T6-TRIAL-10	Yes
11	80MHZ-T6-TRIAL-11	Yes
12	80MHZ-T6-TRIAL-12	Yes
13	80MHZ-T6-TRIAL-13	Yes
14	80MHZ-T6-TRIAL-14	Yes
15	80MHZ-T6-TRIAL-15	Yes
16	80MHZ-T6-TRIAL-16	Yes
17	80MHZ-T6-TRIAL-17	Yes
18	80MHZ-T6-TRIAL-18	Yes
19	80MHZ-T6-TRIAL-19	Yes
20	80MHZ-T6-TRIAL-20	Yes
21	80MHZ-T6-TRIAL-21	Yes
22	80MHZ-T6-TRIAL-22	Yes
23	80MHZ-T6-TRIAL-23	Yes
24	80MHZ-T6-TRIAL-24	Yes
25	80MHZ-T6-TRIAL-25	Yes
26	80MHZ-T6-TRIAL-26	Yes
27	80MHZ-T6-TRIAL-27	Yes
28	80MHZ-T6-TRIAL-28	Yes
29	80MHZ-T6-TRIAL-29	Yes
30	80MHZ-T6-TRIAL-30	Yes
Summary: 30 detections in 30 trials. See Appendix A for Type 6 Radar Pulse hopping patterns.		

5 Test Equipment Use List

Equipment	Manufacturer	Model #	Serial/Inst #	Last Cal mm/dd/yy	Next Cal mm/dd/yy
Spectrum Analyzer	Agilent	N9030A	US51350291	01/15/2019	01/15/2020
Vector Signal Generator	Rhode Schwarz	SMU 200A	1141.2005.02	07/24/2018	07/24/2020
Horn Antenna (TX)	A.H. Systems, Inc.	SAS-571	752	NCR	NCR
Horn Antenna (RX)	EMCO	3115	9602-4676	05/03/2019	05/03/2021

* NCR = No Calibration Required

6 Test Setup Photo

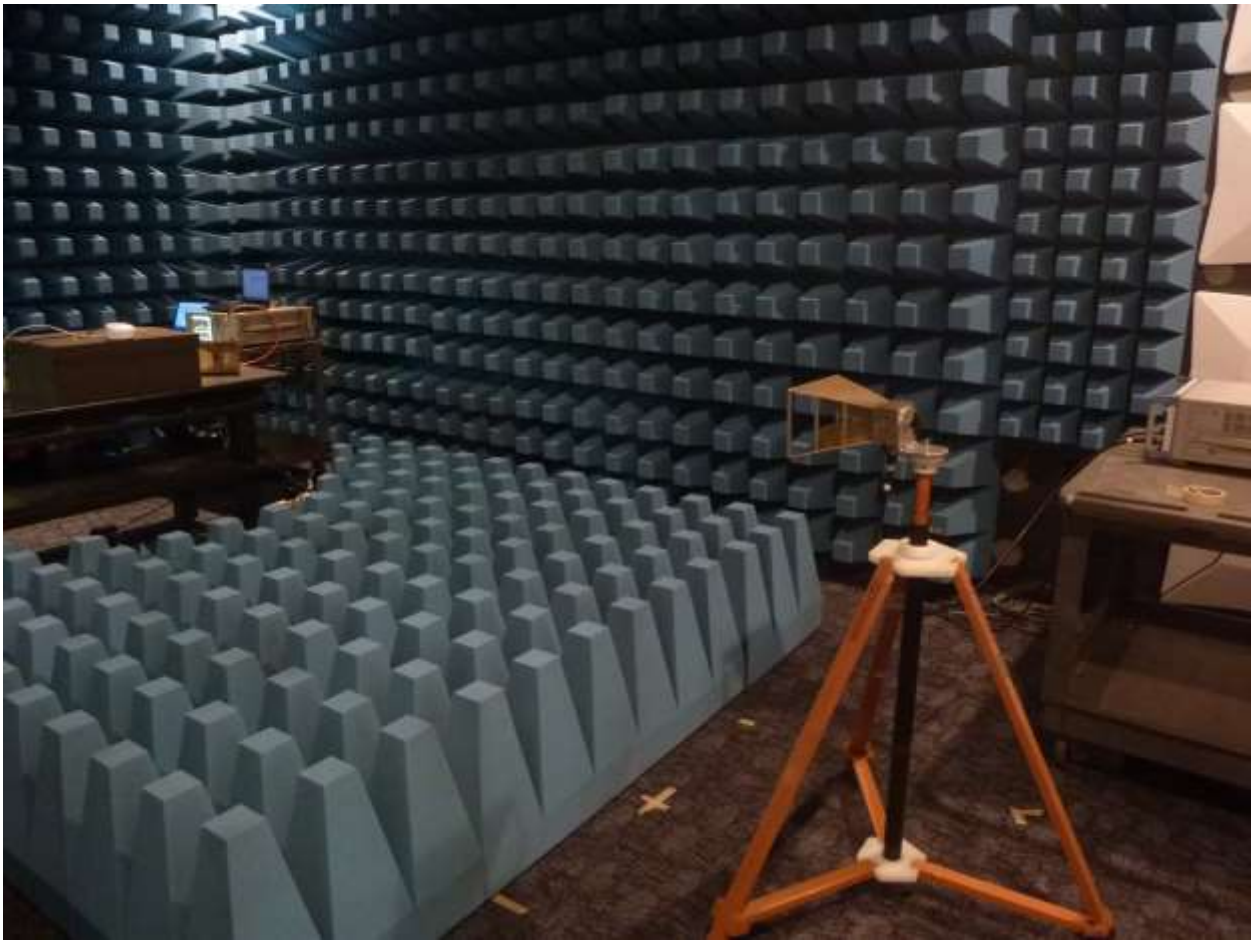

Figure 21: DFS Test Setup Photo for Master – Radiated Method – View 1

Figure 22: DFS Test Setup Photo for Master – Radiated Method – View 2

Figure 23: DFS Test Setup Photo for Master – Conducted Method – View 1

Figure 24: DFS Test Setup Photo for Master – Conducted Method – View 2

7 DFS Test Plan

7.1 Introduction

This section provides a description of the Equipment Under Test (EUT), configurations, operating conditions, and performance acceptance criteria. It is an overview of information provided by the manufacturer so that the test laboratory may perform the requested testing.

7.2 Customer

Table 36: Customer Information

Company Name	eero LLC
Address	660 3rd Street, 4th Floor
City, State, Zip	San Francisco, CA 94107
Country	U.S.A.
Phone	(415) 738-7972
Fax	

Table 37: Technical Contact Information

Name	Clifford Clarke
E-mail	cliff@eero.com
Phone	(415) 738-7972
Fax	

7.3 Equipment Under Test (EUT)

Table 38: EUT Specifications

EUT Specifications	
AC Input	100-240V AC, 50 – 60 Hz
Environment	Indoor
Operating Temperature Range:	0 to 35 degrees C
Multiple Feeds:	☐ Yes and how many ☒ No
Product Marketing Name (PMN)	eero
Hardware Version Identification Number (HVIN)	A01
Firmware Version Identification Number (FVIN)	eeroOS
RF Test Software Version	BusyBox v1.23.2 and eeroOS 3.17
802.11-radio modules	
Operating Mode	802.11a, 802.11n (HT20, HT40), 802.11ac (VHT20, VHT40,VHT80)
Transmitter Frequency Band	5.25 GHz to 5.35 GHz 5.47 GHz to 5.725 GHz
Modulation Type	☐ AM ☐ FM ☐ DTS ☒ OFDM ☐ Other describe: 16QAM and 64 QAM
Data Rate	802.11a: 1 Spatial Streams: 6, 9, 12, 18, 24, 36, 48, 54 Mbps 802.11n/ac HT20/VHT20: 2 Spatial Streams: 13, 26, 39, 52, 78, 104, 117, 130 /156 Mbps (LGI) 802.11n/ac HT40/VHT40: 2 Spatial Streams: 27, 54, 81, 108, 162, 216, 243, 270 / 324, 370 Mbps (LGI) 802.11ac VHT 80: 2 Spatial Streams: 58.5, 117, 175.5, 234, 351, 468, 526.5, 585, 702, 780 Mbps (LGI)
TX/RX Chain (s)	MIMO (2x2)
Directional Gain Type	☐ Correlated ☒ Beam-Forming ☐ Other describe:
Type of Equipment	☒ Table Top ☐ Wall-mount ☐ Floor standing cabinet ☐ Other:
Note: All 2 chains will be on / transmitted at all time.	

Table 39: Interface Specifications

Interface Type	Cabled with what type of cable?	Is the cable shielded?	Maximum potential length of the cable?	Metallic (M), Coax (C), Fiber (F), or Not Applicable?
RJ45	CAT-5 Ethernet	☒ No	☒ Metric: 2 m	☒ N/A
USB	USB	☐ No	☒ Metric: 1 m	☒ N/A

Table 40: Supported Equipment

Equipment	Manufacturer	Model	Serial	Used for
Laptop	Dell	Latitude	35521341769	Configure EUT (Master)
Laptop	Apple	Mac Pro	C02PX426FVH8	Stream the video (Client)
Note: None.				

Table 41: Description of Sample used for Testing

Device	Serial	FCC 06-96	RF Connection
Master	J942-0038-RCDG-YK2F	Use for 20 MHz bandwidth DFS tests	Radiated Method
Master	J942-0038-RCDG-YK2F	Use for 40 MHz bandwidth DFS tests	
Master	J942-0038-RCDG-YK2F	Use for 80 MHz bandwidth DFS tests	

Table 42: Test Mode for DFS

Test	20 MHz BW	40 MHz BW	80 MHz BW	Comments
DFS Detection Threshold	5260 MHz, 2 Streams	5270 MHz, 2 Streams	5290 MHz, 2 Streams	EUT transmits more than 200 mW. Calculate the detection threshold and used to verify all 6 types of waveforms.
U-NII Detection Bandwidth	5260 MHz, 2 Streams	5270 MHz, 2 Streams	5290 MHz, 2 Streams	Inject verified Type 1 waveforms with EUT.
Performance Requirements Checks	5260 MHz, 2 Streams	5270 MHz, 2 Streams	5290 MHz, 2 Streams	No traffic.
In-Service Monitoring	5260 MHz, 2 Streams	5270 MHz, 2 Streams	5290 MHz, 2 Streams	>17% data traffic using iPerf application at the client end.

Test	20 MHz BW	40 MHz BW	80 MHz BW	Comments
Radar Statistic Performance Check	5260 MHz, 2 Streams	5270 MHz, 2 Streams	5290 MHz & 5530 MHz, 2 Streams	>17% data traffic using iPerf application at the client end.
Note: 1. 5260 MHz was selected to represent 20 MHz bandwidth DFS characteristics of EUT. 2. 5270 MHz was selected to represent 40 MHz bandwidth DFS characteristics of EUT. 3. 5290 MHz & 5530 MHz was selected to represent 80 MHz bandwidth DFS characteristics of EUT. 4. All two chains will be on at all time.				

7.4 Test Specification

Table 43: Test Specifications

Dynamic Frequency Selection	
Regulation Rules / Standard	**Requirement**
CFR 47 Part 15.407(h) 2019, RSS-247 (6.3) 2017 and KDB 905462 D02 UNII DFS Compliance Procedures New Rules v02	All

Appendix A

A.1 Radar Type 5 Parameters for 20 MHz Bandwidth

TYPE 5 PARAMETER SHEET						Rohde & Schwarz Pulse Sequencer
Trial Number : 1						
Bursts in Trial: 19						
Burst	**Number of Pulses**	**Pulse Width (µsec)**	**Chirp Width (MHz)**	**Pulse 1-to-2 PRI (µsec)**	**Pulse 2-to-3 PRI (µsec)**	**Start Location Within Interval (msec)**
1	2	98.6	20	1323		100.261
2	2	94.4	20	1109		255.494
3	2	68.4	20	1078		227.852
4	2	89.1	20	1571		418.073
5	2	87	20	1953		341.844
6	1	91.7	20			349.035
7	3	52.6	20	1182	1307	517.026
8	3	62.5	20	1570	1848	270.497
9	2	62	20	1679		9.778
10	1	89	20			494.929
11	2	85.9	20	1901		472.721
12	2	56.6	20	1563		390.172
13	1	60.1	20			11.903
14	2	94.5	20	1642		146.064
15	1	57.9	20			496.925
16	1	81.6	20			406.416
17	2	73.1	20	1323		31.337
18	1	96.5	20			609.358
19	3	75.2	20	1045	1831	537.879

TYPE 5 PARAMETER SHEET

Rohde & Schwarz
Pulse Sequencer

Trial Number : 2

Bursts in Trial: 9

Burst	Number of Pulses	Pulse Width (µsec)	Chirp Width (MHz)	Pulse 1-to-2 PRI (µsec)	Pulse 2-to-3 PRI (µsec)	Start Location Within Interval (msec)
1	3	85.5	17	1852	1184	1245.75
2	2	78.7	17	1794		1044.917
3	3	62.7	17	1444	1667	900.523
4	2	88	17	1327		869.55
5	2	89.1	17	1114		1250.767
6	2	69.2	17	1373		1244.333
7	3	54.8	17	1159	1924	952.31
8	2	54.3	17	1755		766.367
9	1	80.6	17			236.133

TYPE 5 PARAMETER SHEET

Rohde & Schwarz
Pulse Sequencer

Trial Number : 3

Bursts in Trial: 8

Burst	Number of Pulses	Pulse Width (µsec)	Chirp Width (MHz)	Pulse 1-to-2 PRI (µsec)	Pulse 2-to-3 PRI (µsec)	Start Location Within Interval (msec)
1	1	83.8	9			978.994
2	1	69.5	9			588.02
3	2	98.8	9	1318		990.12
4	2	72.3	9	1242		100.45
5	2	81	9	1815		501.7
6	2	73.5	9	1978		670.19
7	3	60.6	9	1708	1335	1233.7
8	1	50.3	9			617.9

TYPE 5 PARAMETER SHEET

Rohde & Schwarz
Pulse Sequencer

Trial Number : 4

Bursts in Trial: 14

Burst	Number of Pulses	Pulse Width (µsec)	Chirp Width (MHz)	Pulse 1-to-2 PRI (µsec)	Pulse 2-to-3 PRI (µsec)	Start Location Within Interval (msec)
1	1	91	13			427.275
2	2	88.9	13	1251		189.767
3	3	73.6	13	1418	1517	130.534
4	3	78.3	13	1741	1322	353.531
5	3	71	13	1576	1689	592.689
6	3	87.2	13	1038	1750	669.816
7	3	81.3	13	1063	1277	354.773
8	2	97.3	13	1549		758.64
9	2	74.2	13	1920		20.737
10	2	84	13	1983		703.114
11	2	62.7	13	1672		480.051
12	2	72.5	13	1356		844.729
13	1	56.2	13			762.386
14	1	53.9	13			275.243

TYPE 5 PARAMETER SHEET

Rohde & Schwarz
Pulse Sequencer

Trial Number : 5

Bursts in Trial: 13

Burst	Number of Pulses	Pulse Width (µsec)	Chirp Width (MHz)	Pulse 1-to-2 PRI (µsec)	Pulse 2-to-3 PRI (µsec)	Start Location Within Interval (msec)
1	2	54.5	18	1103		314.143
2	2	86.5	18	1571		413.773
3	1	90	18			687.906
4	2	66.7	18	1872		843.629
5	2	61.4	18	1199		367.932
6	2	70.7	18	1583		252.775
7	1	55.8	18			895.218
8	3	84.8	18	1327	1371	821.542
9	2	91.6	18	1799		282.575
10	1	87.5	18			165.528
11	3	51	18	1010	1272	24.881
12	1	83.1	18			294.754
13	2	87.9	18	1666		422.777

TYPE 5 PARAMETER SHEET

Rohde & Schwarz
Pulse Sequencer

Trial Number : 6

Bursts in Trial: 8

Burst	Number of Pulses	Pulse Width (µsec)	Chirp Width (MHz)	Pulse 1-to-2 PRI (µsec)	Pulse 2-to-3 PRI (µsec)	Start Location Within Interval (msec)
1	3	73	6	1749	1460	117.67
2	2	84.8	6	1303		278.37
3	3	71.2	6	1593	1414	912.81
4	2	65.4	6	1941		958.23
5	2	56.4	6	1963		1347.16
6	3	99.8	6	1344	1146	1475.71
7	2	99.3	6	1441		715.58
8	1	78.7	6			715.1

TYPE 5 PARAMETER SHEET

Rohde & Schwarz
Pulse Sequencer

Trial Number : 7

Bursts in Trial: 12

Burst	Number of Pulses	Pulse Width (µsec)	Chirp Width (MHz)	Pulse 1-to-2 PRI (µsec)	Pulse 2-to-3 PRI (µsec)	Start Location Within Interval (msec)
1	2	63.9	20	1666		55.081
2	2	82.1	20	1380		178.04
3	1	74.1	20			931.19
4	2	68.8	20	1802		295.25
5	2	67.8	20	1613		280.86
6	2	68.3	20	1359		877.74
7	3	77.7	20	1471	1252	704.87
8	3	74.5	20	1051	1795	889.16
9	2	80.1	20	1146		636.09
10	1	86.3	20			679.46
11	1	67.5	20			500.8
12	2	80.6	20	1786		166.7

TYPE 5 PARAMETER SHEET

Rohde & Schwarz
Pulse Sequencer

Trial Number : 8

Bursts in Trial: 16

Burst	Number of Pulses	Pulse Width (µsec)	Chirp Width (MHz)	Pulse 1-to-2 Spacing (µsec)	Pulse 2-to-3 PRI (µsec)	Start Location Within Interval (msec)
1	1	88.3	5			531.954
2	3	79.3	5	1191	1835	566.44
3	2	60.9	5	1376		680.43
4	2	97.4	5	1097		430.43
5	2	74.1	5	1904		604.98
6	2	94	5	1301		69.91
7	2	86.9	5	1699		177.81
8	2	51.5	5	1593		281.73
9	1	57.9	5			367.12
10	1	57.9	5			148.02
11	2	75.7	5	1769		219.92
12	1	52.3	5			425.16
13	2	71.3	5	1470		366.54
14	2	86.8	5	1253		37.52
15	1	58.6	5			3.9
16	1	88.1	5			507.9

TYPE 5 PARAMETER SHEET

Rohde & Schwarz
Pulse Sequencer

Trial Number : 9

Bursts in Trial: 9

Burst	Number of Pulses	Pulse Width (µsec)	Chirp Width (MHz)	Pulse 1-to-2 PRI (µsec)	Pulse 2-to-3 PRI (µsec)	Start Location Within Interval (msec)
1	2	58	8	1774		465.238
2	2	84.9	8	1700		491.887
3	3	83	8	1613	1450	1205.043
4	1	95.1	8			515
5	3	80.7	8	1067	1271	781.077
6	2	99.2	8	1255		209.613
7	2	83.9	8	1785		958.76
8	2	85.3	8	1410		428.677
9	1	96.3	8			451.333

TYPE 5 PARAMETER SHEET

Rohde & Schwarz
Pulse Sequencer

Trial Number : 10

Bursts in Trial: 13

Burst	Number of Pulses	Pulse Width (µsec)	Chirp Width (MHz)	Pulse 1-to-2 PRI (µsec)	Pulse 2-to-3 PRI (µsec)	Start Location Within Interval (msec)
1	1	92.6	7			840.469
2	1	91.7	7			800.253
3	2	93.9	7	1009		750.786
4	2	72.7	7	1848		125.339
5	2	71.2	7	1931		856.942
6	3	79.1	7	1346	1072	147.295
7	2	82.6	7	1722		610.308
8	2	88.8	7	1538		366.652
9	2	73.5	7	1199		713.065
10	1	96.6	7			370.068
11	2	90.2	7	1275		33.751
12	3	75.9	7	1813	1239	694.754
13	3	98.3	7	1272	1006	119.177

TYPE 5 PARAMETER SHEET

Rohde & Schwarz
Pulse Sequencer

Trial Number : 11

Bursts in Trial: 16

Burst	Number of Pulses	Pulse Width (µsec)	Chirp Width (MHz)	Pulse 1-to-2 PRI (µsec)	Pulse 2-to-3 PRI (µsec)	Start Location Within Interval (msec)
1	3	77.5	5	1395	1175	198.62
2	2	80.8	5	1928		295.11
3	3	62.8	5	1043	1535	368.76
4	2	88.4	5	1255		147.54
5	1	85	5			82.64
6	1	57.9	5			694.7
7	2	68.4	5	1345		200.58
8	3	53.2	5	1037	1281	566.62
9	2	76	5	1561		9.66
10	2	51.2	5	1503		326.69
11	3	90.4	5	1941	1497	652.78
12	2	78.6	5	1489		197.05
13	2	62.6	5	1782		586.67
14	2	56.9	5	1720		633.4
15	1	95.6	5			411.3
16	2	84.4	5	1808		370.3

TYPE 5 PARAMETER SHEET

Rohde & Schwarz
Pulse Sequencer

Trial Number : 12

Bursts in Trial: 19

Burst	Number of Pulses	Pulse Width (µsec)	Chirp Width (MHz)	Pulse 1-to-2 PRI (µsec)	Pulse 2-to-3 PRI (µsec)	Start Location Within Interval (msec)
1	1	50	9			331.545
2	3	64.5	9	1893	1067	469.921
3	2	69.4	9	1769		241.632
4	2	84.5	9	1579		68.833
5	1	84.7	9			522.094
6	2	76.4	9	1727		511.855
7	2	93.4	9	1209		260.926
8	1	68.7	9			539.447
9	2	64.6	9	1598		274.188
10	2	65.9	9	1175		464.119
11	1	84.6	9			307.461
12	1	59.3	9			506.162
13	3	84.5	9	1377	1184	69.893
14	2	61.2	9	1621		261.184
15	2	76.6	9	1540		349.435
16	3	64	9	1758	1935	167.746
17	3	57.8	9	1117	1662	102.937
18	2	82.1	9	1764		295.058
19	1	57.2	9			31.579

TYPE 5 PARAMETER SHEET

Rohde & Schwarz
Pulse Sequencer

Trial Number : 13

Bursts in Trial: 11

Burst	Number of Pulses	Pulse Width (µsec)	Chirp Width (MHz)	Pulse 1-to-2 PRI (µsec)	Pulse 2-to-3 PRI (µsec)	Start Location Within Interval (msec)
1	3	83.9	11	1114	1527	91.959
2	2	59.6	11	1356		734.791
3	3	97.4	11	1613	1215	262.282
4	2	63.9	11	1117		63.533
5	2	74.8	11	1177		825.874
6	2	99.8	11	1079		456.155
7	2	62	11	1258		357.485
8	1	91.4	11			260.506
9	2	59.5	11	1046		214.557
10	2	51.4	11	1842		631.418
11	3	79.6	11	1519	1718	90.409

TYPE 5 PARAMETER SHEET

Rohde & Schwarz
Pulse Sequencer

Trial Number : 14

Bursts in Trial: 12

Burst	Number of Pulses	Pulse Width (µsec)	Chirp Width (MHz)	Pulse 1-to-2 PRI (µsec)	Pulse 2-to-3 PRI (µsec)	Start Location Within Interval (msec)
1	1	91.3	13			638.065
2	2	99.9	13	1074		115.18
3	1	87.2	13			946.21
4	2	57.5	13	1784		627.91
5	1	85.1	13			6.2
6	3	90.7	13	1638	1574	543.16
7	2	85	13	1347		693.78
8	3	76.8	13	1693	1279	686.37
9	2	69.8	13	1861		86.86
10	3	53.1	13	1579	1104	64.91
11	3	83.2	13	1663	1812	723.8
12	3	74.9	13	1067	1441	167.4

TYPE 5 PARAMETER SHEET

Rohde & Schwarz
Pulse Sequencer

Trial Number : 15

Bursts in Trial: 8

Burst	Number of Pulses	Pulse Width (µsec)	Chirp Width (MHz)	Pulse 1-to-2 PRI (µsec)	Pulse 2-to-3 PRI (µsec)	Start Location Within Interval (msec)
1	3	80.1	12	1577	1507	473.059
2	3	77.7	12	1940	1619	568.29
3	1	98	12			54.23
4	2	92	12	1196		235.01
5	2	99.8	12	1202		425.2
6	2	90.7	12	1350		468.51
7	2	51.5	12	1487		637.76
8	1	98.2	12			1011.2

TYPE 5 PARAMETER SHEET

Rohde & Schwarz
Pulse Sequencer

Trial Number : 16

Bursts in Trial: 9

Burst	Number of Pulses	Pulse Width (µsec)	Chirp Width (MHz)	Pulse 1-to-2 PRI (µsec)	Pulse 2-to-3 PRI (µsec)	Start Location Within Interval (msec)
1	2	93.4	17	1248		237.614
2	2	97.6	17	1747		1240.757
3	3	93.8	17	1282	1322	1313.183
4	2	65.3	17	1133		141.47
5	2	61	17	1151		293.647
6	2	83.7	17	1621		1152.323
7	2	95.3	17	1476		1262.21
8	1	60.2	17			199.757
9	2	93.2	17	1821		206.433

TYPE 5 PARAMETER SHEET

Rohde & Schwarz
Pulse Sequencer

Trial Number : 17

Bursts in Trial: 19

Burst	Number of Pulses	Pulse Width (µsec)	Chirp Width (MHz)	Pulse 1-to-2 PRI (µsec)	Pulse 2-to-3 PRI (µsec)	Start Location Within Interval (msec)
1	2	78.5	7	1099		114.628
2	2	93.4	7	1433		572.021
3	1	97.1	7			396.022
4	2	92.6	7	1267		430.923
5	1	61.1	7			420.744
6	2	80.7	7	1292		119.735
7	2	58.2	7	1973		120.926
8	3	59.5	7	1515	1404	338.707
9	3	54.6	7	1794	1334	391.408
10	2	87.6	7	1516		436.949
11	2	87.4	7	1330		275.241
12	3	87.2	7	1351	1521	433.122
13	2	51.9	7	1986		192.783
14	3	83	7	1219	1139	235.114
15	2	88.3	7	1469		379.155
16	2	58.4	7	1914		115.356
17	2	99.6	7	1004		526.137
18	3	84.9	7	1758	1814	393.258
19	2	79.3	7	1001		226.379

TYPE 5 PARAMETER SHEET

Rohde & Schwarz
Pulse Sequencer

Trial Number : 18

Bursts in Trial: 8

Burst	Number of Pulses	Pulse Width (µsec)	Chirp Width (MHz)	Pulse 1-to-2 PRI (µsec)	Pulse 2-to-3 PRI (µsec)	Start Location Within Interval (msec)
1	2	61	13	1707		541.351
2	2	89.9	13	1470		1317.82
3	1	71.8	13			339.81
4	2	52.1	13	1311		661.73
5	3	70.8	13	1313	1223	918.76
6	2	91.1	13	1870		483.9
7	1	60.1	13			505.67
8	2	58.4	13	1694		842.9

TYPE 5 PARAMETER SHEET

Rohde & Schwarz
Pulse Sequencer

Trial Number : 19

Bursts in Trial: 9

Burst	Number of Pulses	Pulse Width (µsec)	Chirp Width (MHz)	Pulse 1-to-2 PRI (µsec)	Pulse 2-to-3 PRI (µsec)	Start Location Within Interval (msec)
1	2	67.4	13	1677		363.354
2	1	52.9	13			615.947
3	1	98.8	13			460.193
4	2	54.2	13	1065		646.03
5	3	87.7	13	1638	1621	190.387
6	1	98.9	13			604.643
7	1	77.2	13			728.51
8	2	89.7	13	1487		178.437
9	1	80	13			984.233

TYPE 5 PARAMETER SHEET

Rohde & Schwarz
Pulse Sequencer

Trial Number : 20

Bursts in Trial: 15

Burst	Number of Pulses	Pulse Width (µsec)	Chirp Width (MHz)	Pulse 1-to-2 PRI (µsec)	Pulse 2-to-3 PRI (µsec)	Start Location Within Interval (msec)
1	3	69.8	12	1441	1906	634.461
2	3	84.5	12	1021	1757	515
3	2	55.4	12	1286		42.74
4	2	82.7	12	1919		22.22
5	2	76.6	12	1712		92.79
6	3	93.2	12	1900	1203	331.67
7	1	82.2	12			765.26
8	1	92.4	12			440.75
9	3	55.4	12	1388	1812	645.3
10	2	62.7	12	1122		60.99
11	2	94.5	12	1071		259.97
12	2	65.8	12	1327		542.57
13	1	96.1	12			26.36
14	2	53.5	12	1678		159.6
15	3	84.3	12	1814	1887	609.9

TYPE 5 PARAMETER SHEET

Rohde & Schwarz
Pulse Sequencer

Trial Number : 21

Bursts in Trial: 14

Burst	Number of Pulses	Pulse Width (µsec)	Chirp Width (MHz)	Pulse 1-to-2 PRI (µsec)	Pulse 2-to-3 PRI (µsec)	Start Location Within Interval (msec)
1	3	85.4	19	1440	1817	368.547
2	1	84.9	19			165.607
3	2	75.4	19	1886		204.934
4	2	66.1	19	1607		760.731
5	2	72.1	19	1032		17.639
6	2	70.2	19	1494		566.336
7	1	57.7	19			733.463
8	1	51.4	19			297.04
9	2	99.4	19	1341		464.117
10	3	79.2	19	1901	1365	678.834
11	3	77.5	19	1546	1151	341.741
12	2	65.4	19	1128		841.029
13	2	71.3	19	1437		53.386
14	2	76.5	19	1825		82.043

TYPE 5 PARAMETER SHEET

Rohde & Schwarz
Pulse Sequencer

Trial Number : 22

Bursts in Trial: 11

Burst	Number of Pulses	Pulse Width (µsec)	Chirp Width (MHz)	Pulse 1-to-2 PRI (µsec)	Pulse 2-to-3 PRI (µsec)	Start Location Within Interval (msec)
1	2	72	13	1586		789.369
2	2	51.2	13	1040		982.741
3	1	57.9	13			527.712
4	2	84.1	13	1879		275.963
5	2	95.7	13	1385		884.934
6	1	78.1	13			548.865
7	1	52.9	13			944.325
8	1	98.6	13			1048.536
9	1	73.8	13			477.227
10	3	85.8	13	1960	1671	155.718
11	2	81.3	13	1366		434.209

TYPE 5 PARAMETER SHEET

Rohde & Schwarz
Pulse Sequencer

Trial Number : 23

Bursts in Trial: 9

Burst	Number of Pulses	Pulse Width (µsec)	Chirp Width (MHz)	Pulse 1-to-2 PRI (µsec)	Pulse 2-to-3 PRI (µsec)	Start Location Within Interval (msec)
1	1	65.5	9			1001.6
2	2	61.7	9	1996		1237.267
3	2	67.2	9	1508		1074.763
4	1	57.3	9			719.2
5	2	92.9	9	1391		252.377
6	2	94.8	9	1476		988.623
7	1	100	9			440.98
8	1	69.7	9			1324.067
9	1	62.5	9			966.933

TYPE 5 PARAMETER SHEET

Rohde & Schwarz
Pulse Sequencer

Trial Number : 24

Bursts in Trial: 16

Burst	Number of Pulses	Pulse Width (µsec)	Chirp Width (MHz)	Pulse 1-to-2 PRI (µsec)	Pulse 2-to-3 PRI (µsec)	Start Location Within Interval (msec)
1	2	90.1	15	1989		219.678
2	2	78.9	15	1187		661.83
3	1	79.6	15			526.82
4	2	54.2	15	1910		53.74
5	3	79	15	1155	1128	663.1
6	1	51.9	15			568.66
7	3	66.6	15	1361	1019	456.67
8	2	94.1	15	1045		678.92
9	1	63.7	15			389.19
10	3	78.8	15	1846	1189	476
11	3	85.3	15	1309	1029	487.18
12	3	88.1	15	1909	1709	236.62
13	3	57.7	15	1823	1376	660.21
14	3	72.1	15	1805	1573	476.1
15	2	54.9	15	1483		6
16	1	56.2	15			370.8

TYPE 5 PARAMETER SHEET

Rohde & Schwarz
Pulse Sequencer

Trial Number : 25

Bursts in Trial: 8

Burst	Number of Pulses	Pulse Width (µsec)	Chirp Width (MHz)	Pulse 1-to-2 PRI (µsec)	Pulse 2-to-3 PRI (µsec)	Start Location Within Interval (msec)
1	1	53	6			651.183
2	2	82.8	6	1669		734.79
3	1	57	6			20.32
4	2	88.2	6	1941		1215.48
5	1	92	6			1064.23
6	1	70	6			139.82
7	2	82.9	6	1210		725.52
8	1	71.5	6			968.6

TYPE 5 PARAMETER SHEET

Rohde & Schwarz
Pulse Sequencer

Trial Number : 26

Bursts in Trial: 15

Burst	Number of Pulses	Pulse Width (µsec)	Chirp Width (MHz)	Pulse 1-to-2 PRI (µsec)	Pulse 2-to-3 PRI (µsec)	Start Location Within Interval (msec)
1	2	89.4	14	1854		635.107
2	2	78.9	14	1875		172.224
3	2	78.7	14	1846		600.24
4	3	53.4	14	1821	1249	548.47
5	1	70.1	14			233.84
6	2	59.4	14	1187		781.35
7	2	59	14	1816		184.6
8	2	99.7	14	1565		85.66
9	3	74.5	14	1911	1000	265.09
10	1	98.2	14			758.28
11	2	91.8	14	1372		640.77
12	2	56.7	14	1732		56.3
13	1	92.2	14			264.89
14	2	93.2	14	1170		107
15	2	59.1	14	1219		278

TYPE 5 PARAMETER SHEET

Rohde & Schwarz
Pulse Sequencer

Trial Number : 27

Bursts in Trial: 11

Burst	Number of Pulses	Pulse Width (µsec)	Chirp Width (MHz)	Pulse 1-to-2 PRI (µsec)	Pulse 2-to-3 PRI (µsec)	Start Location Within Interval (msec)
1	2	93	12	1246		345.302
2	2	85.6	12	1929		851.921
3	3	86.8	12	1887	1038	658.062
4	1	50.9	12			992.993
5	2	75	12	1111		725.704
6	1	69.4	12			775.775
7	3	81.6	12	1923	1814	888.225
8	1	64.8	12			145.086
9	2	85.9	12	1351		431.597
10	1	57.9	12			928.418
11	2	67.2	12	1389		812.109

TYPE 5 PARAMETER SHEET

Rohde & Schwarz
Pulse Sequencer

Trial Number : 28

Bursts in Trial: 8

Burst	Number of Pulses	Pulse Width (µsec)	Chirp Width (MHz)	Pulse 1-to-2 PRI (µsec)	Pulse 2-to-3 PRI (µsec)	Start Location Within Interval (msec)
1	3	97.2	7	1830	1079	613.184
2	2	68.2	7	1092		242.54
3	3	89	7	1059	1760	671.15
4	2	97.5	7	1312		938.99
5	2	60.1	7	1212		1010.4
6	2	62	7	1805		959.79
7	3	65.7	7	1279	1486	586.41
8	2	60.3	7	1120		722.1

TYPE 5 PARAMETER SHEET

Rohde & Schwarz
Pulse Sequencer

Trial Number : 29

Bursts in Trial: 13

Burst	Number of Pulses	Pulse Width (µsec)	Chirp Width (MHz)	Pulse 1-to-2 PRI (µsec)	Pulse 2-to-3 PRI (µsec)	Start Location Within Interval (msec)
1	1	60.1	11			130.588
2	3	90.6	11	1701	1220	8.771
3	2	64	11	1723		543.446
4	2	75.1	11	1600		108.579
5	3	71.8	11	1573	1509	533.412
6	1	98	11			73.745
7	1	97.6	11			703.368
8	3	70.6	11	1808	1968	645.922
9	2	83.4	11	1042		584.615
10	2	63.2	11	1805		734.008
11	3	73	11	1416	1333	475.601
12	3	62.8	11	1527	1985	657.354
13	1	88.3	11			696.577

TYPE 5 PARAMETER SHEET

Rohde & Schwarz
Pulse Sequencer

Trial Number : 30

Bursts in Trial: 12

Burst	Number of Pulses	Pulse Width (µsec)	Chirp Width (MHz)	Pulse 1-to-2 PRI (µsec)	Pulse 2-to-3 PRI (µsec)	Start Location Within Interval (msec)
1	2	83.1	15	1635		943.336
2	2	94.8	15	1040		724.58
3	1	99.6	15			575.53
4	2	71.4	15	1361		658.42
5	2	54.3	15	1661		219.28
6	3	73.7	15	1527	1578	819.93
7	3	55.8	15	1000	1897	862.76
8	3	97	15	1363	1105	711.19
9	2	78.6	15	1719		379.62
10	1	52.8	15			266.84
11	3	52	15	1623	1893	247.8
12	3	79.1	15	1271	1913	919.1

A.2 Radar Type 5 Parameters for 40 MHz Bandwidth

TYPE 5 PARAMETER SHEET						Rohde & Schwarz Pulse Sequencer
Trial Number : 1						
Bursts in Trial: 14						
Burst	**Number of Pulses**	**Pulse Width (µsec)**	**Chirp Width (MHz)**	**Pulse 1-to-2 PRI (µsec)**	**Pulse 2-to-3 PRI (µsec)**	**Start Location Within Interval (msec)**
1	2	59.9	9	1416		103.695
2	2	77	9	1684		759.367
3	2	72.9	9	1581		5.784
4	3	69.8	9	1478	1273	152.061
5	3	92.2	9	1225	1026	145.869
6	2	50.2	9	1772		440.776
7	3	80.2	9	1113	1980	770.613
8	2	87.3	9	1900		757.42
9	1	65	9			460.037
10	3	50	9	1085	1449	691.674
11	2	87.5	9	1025		491.571
12	1	74.9	9			515.359
13	2	85.3	9	1442		346.286
14	2	86.6	9	1670		198.943

TYPE 5 PARAMETER SHEET

Rohde & Schwarz
Pulse Sequencer

Trial Number : 2

Bursts in Trial: 16

Burst	Number of Pulses	Pulse Width (µsec)	Chirp Width (MHz)	Pulse 1-to-2 PRI (µsec)	Pulse 2-to-3 PRI (µsec)	Start Location Within Interval (msec)
1	3	57.6	7	1596	1400	233.626
2	2	79.1	7	1786		64.914
3	2	70.1	7	1505		377.35
4	2	77.7	7	1468		471.06
5	3	92.3	7	1263	1995	264.61
6	2	69.4	7	1613		20.39
7	2	50.1	7	1042		661.58
8	3	90.1	7	1711	1584	174.34
9	2	68.1	7	1297		659.02
10	2	68.9	7	1279		190
11	1	92.7	7			68.29
12	1	78.7	7			306.32
13	2	98	7	1886		661.4
14	3	64.1	7	1239	1816	449.3
15	2	71.1	7	1647		38.4
16	2	69.8	7	1967		295.8

TYPE 5 PARAMETER SHEET

Rohde & Schwarz
Pulse Sequencer

Trial Number : 3

Bursts in Trial: 18

Burst	Number of Pulses	Pulse Width (µsec)	Chirp Width (MHz)	Pulse 1-to-2 PRI (µsec)	Pulse 2-to-3 PRI (µsec)	Start Location Within Interval (msec)
1	3	58.4	15	1572	1469	112.167
2	2	56.7	15	1804		437.023
3	2	88.9	15	1420		541.177
4	1	63.6	15			109.24
5	2	89	15	1789		485.833
6	2	61.4	15	1260		485.447
7	2	66.1	15	1123		645.26
8	3	76.2	15	1042	1218	482.273
9	2	70.2	15	1609		300.357
10	1	51.1	15			465.53
11	2	52.8	15	1998		136.433
12	2	56.1	15	1535		26.767
13	1	99.3	15			643.38
14	3	55.7	15	1175	1959	469.323
15	2	91.8	15	1335		643.587
16	3	67.6	15	1885	1845	221.4
17	1	59.3	15			280.133
18	3	63.7	15	1128	1547	423.667

TYPE 5 PARAMETER SHEET

Rohde & Schwarz
Pulse Sequencer

Trial Number : 4

Bursts in Trial: 14

Burst	Number of Pulses	Pulse Width (µsec)	Chirp Width (MHz)	Pulse 1-to-2 PRI (µsec)	Pulse 2-to-3 PRI (µsec)	Start Location Within Interval (msec)
1	2	78	15	1316		361.837
2	2	67.2	15	1418		765.637
3	1	73.3	15			114.894
4	2	55.3	15	1789		531.231
5	2	69.9	15	1629		576.599
6	1	50.8	15			676.516
7	2	94.1	15	1161		840.383
8	2	73.9	15	1850		664.38
9	3	75.8	15	1637	1721	183.257
10	1	77	15			796.574
11	2	95.2	15	1141		307.951
12	3	93.4	15	1611	1109	48.529
13	1	66.6	15			784.286
14	2	64.3	15	1601		753.843

TYPE 5 PARAMETER SHEET

Rohde & Schwarz
Pulse Sequencer

Trial Number : 5

Bursts in Trial: 14

Burst	Number of Pulses	Pulse Width (µsec)	Chirp Width (MHz)	Pulse 1-to-2 PRI (µsec)	Pulse 2-to-3 PRI (µsec)	Start Location Within Interval (msec)
1	1	50.8	9			811.08
2	1	85.8	9			742.077
3	1	55.3	9			155.764
4	2	75.6	9	1953		703.351
5	2	57	9	1496		534.839
6	2	91.8	9	1503		535.506
7	2	98.9	9	1090		615.733
8	3	50.1	9	1451	1875	359.41
9	2	67.5	9	1065		244.537
10	2	88.1	9	1688		6.184
11	1	61.6	9			417.601
12	2	74.3	9	1875		463.159
13	1	54.5	9			639.186
14	3	85.9	9	1523	1007	780.343

TYPE 5 PARAMETER SHEET

Rohde & Schwarz
Pulse Sequencer

Trial Number : 6

Bursts in Trial: 12

Burst	Number of Pulses	Pulse Width (µsec)	Chirp Width (MHz)	Pulse 1-to-2 PRI (µsec)	Pulse 2-to-3 PRI (µsec)	Start Location Within Interval (msec)
1	3	53.1	18	1877	1979	562.703
2	3	86	18	1084	1288	9.86
3	1	77.8	18			46.61
4	2	97.4	18	1881		949.93
5	3	56.1	18	1687	1775	872.14
6	1	93.2	18			189.23
7	2	81.9	18	1514		519.53
8	2	59.9	18	1831		321.48
9	3	99.3	18	1314	1482	212.33
10	1	50.4	18			124.95
11	3	78	18	1209	1456	333.7
12	2	80.4	18	1914		785.6

TYPE 5 PARAMETER SHEET

Rohde & Schwarz
Pulse Sequencer

Trial Number : 7

Bursts in Trial: 16

Burst	Number of Pulses	Pulse Width (µsec)	Chirp Width (MHz)	Pulse 1-to-2 PRI (µsec)	Pulse 2-to-3 PRI (µsec)	Start Location Within Interval (msec)
1	2	95.2	6	1415		139.964
2	2	93	6	1296		394.36
3	3	55.1	6	1477	1789	354.35
4	2	68.6	6	1257		14.92
5	1	78.4	6			671.33
6	2	74.3	6	1268		453.77
7	1	68.6	6			544.86
8	2	83.2	6	1299		90.5
9	2	58.9	6	1934		340.02
10	1	82.3	6			246.72
11	3	98	6	1150	1966	184.23
12	1	59.5	6			471.11
13	2	82.8	6	1658		551.33
14	2	80.4	6	1586		647.8
15	1	93.5	6			729.1
16	2	81.1	6	1703		326.2

TYPE 5 PARAMETER SHEET

Rohde & Schwarz
Pulse Sequencer

Trial Number : 8

Bursts in Trial: 15

Burst	Number of Pulses	Pulse Width (µsec)	Chirp Width (MHz)	Pulse 1-to-2 Spacing (µsec)	Pulse 2-to-3 PRI (µsec)	Start Location Within Interval (msec)
1	1	96.8	5			410.91
2	2	81	5	1813		73.646
3	1	97.6	5			281.17
4	1	89.4	5			641.56
5	2	50.5	5	1525		674
6	3	55.9	5	1993	1937	198.93
7	2	99.7	5	1805		694.9
8	3	70.3	5	1509	1943	160.95
9	1	60.6	5			649.99
10	2	82.6	5	1558		333.37
11	3	92.8	5	1040	1386	171.5
12	3	66	5	1748	1601	338.03
13	1	98.6	5			410.4
14	3	97.9	5	1372	1517	77.5
15	1	66.3	5			727.5

TYPE 5 PARAMETER SHEET

Rohde & Schwarz
Pulse Sequencer

Trial Number : 9

Bursts in Trial: 10

Burst	Number of Pulses	Pulse Width (µsec)	Chirp Width (MHz)	Pulse 1-to-2 PRI (µsec)	Pulse 2-to-3 PRI (µsec)	Start Location Within Interval (msec)
1	1	99.1	10			397.356
2	3	60.3	10	1964	1383	1092.23
3	2	79.2	10	1581		517.63
4	3	70.5	10	1965	1304	382.06
5	3	75.4	10	1979	1958	691.49
6	1	70.9	10			86.58
7	2	96.2	10	1971		84.51
8	1	77.2	10			920.47
9	3	87.6	10	1773	1295	284.78
10	3	84.4	10	1987	1679	1078.3

TYPE 5 PARAMETER SHEET

Rohde & Schwarz
Pulse Sequencer

Trial Number : 10

Bursts in Trial: 12

Burst	Number of Pulses	Pulse Width (µsec)	Chirp Width (MHz)	Pulse 1-to-2 PRI (µsec)	Pulse 2-to-3 PRI (µsec)	Start Location Within Interval (msec)
1	1	59.7	5			327.232
2	2	69.9	5	1115		576.53
3	3	69.8	5	1668	1018	872.21
4	2	62.3	5	1399		393.53
5	3	85.6	5	1052	1873	148.23
6	2	87.2	5	1416		951.62
7	2	91.5	5	1949		540.44
8	1	98.4	5			451.77
9	3	56	5	1525	1906	245.12
10	1	88.8	5			582.07
11	1	53.7	5			596.3
12	1	71.8	5			133.2

TYPE 5 PARAMETER SHEET

Rohde & Schwarz
Pulse Sequencer

Trial Number : 11

Bursts in Trial: 8

Burst	Number of Pulses	Pulse Width (µsec)	Chirp Width (MHz)	Pulse 1-to-2 PRI (µsec)	Pulse 2-to-3 PRI (µsec)	Start Location Within Interval (msec)
1	1	65.9	5			709
2	2	66.4	5	1069		1473.75
3	2	79.3	5	1946		575.85
4	2	51.3	5	1228		154.74
5	1	50.1	5			356.19
6	1	52.6	5			215.35
7	2	78.7	5	1775		163.26
8	2	81.6	5	1547		1105.7

TYPE 5 PARAMETER SHEET

Rohde & Schwarz
Pulse Sequencer

Trial Number : 12

Bursts in Trial: 19

Burst	Number of Pulses	Pulse Width (µsec)	Chirp Width (MHz)	Pulse 1-to-2 PRI (µsec)	Pulse 2-to-3 PRI (µsec)	Start Location Within Interval (msec)
1	1	81.7	16			274.868
2	2	98	16	1384		539.081
3	3	85	16	1323	1775	417.102
4	2	51.9	16	1049		305.803
5	2	75.8	16	1489		124.134
6	2	73.3	16	1605		564.425
7	2	97.2	16	1383		202.056
8	1	79.8	16			501.777
9	2	88	16	1125		212.418
10	1	55	16			454.069
11	2	59.8	16	1526		341.761
12	2	57.3	16	1624		95.592
13	2	68.9	16	1452		605.003
14	1	69.1	16			4.104
15	2	63.4	16	1004		377.865
16	1	68	16			601.116
17	2	90.1	16	1842		476.137
18	2	56.7	16	1180		478.058
19	2	80.7	16	1993		467.479

TYPE 5 PARAMETER SHEET

Rohde & Schwarz
Pulse Sequencer

Trial Number : 13

Bursts in Trial: 17

Burst	Number of Pulses	Pulse Width (µsec)	Chirp Width (MHz)	Pulse 1-to-2 PRI (µsec)	Pulse 2-to-3 PRI (µsec)	Start Location Within Interval (msec)
1	1	86	9			183.939
2	2	57.3	9	1432		517.368
3	2	72.7	9	1162		502.915
4	3	93.9	9	1166	1187	397.653
5	1	79.7	9			139.911
6	1	72.6	9			202.268
7	2	71.2	9	1239		414.396
8	2	84.1	9	1786		216.014
9	3	58.6	9	1535	1666	62.771
10	3	90	9	1723	1248	67.549
11	2	85.9	9	1559		451.936
12	2	90	9	1727		104.994
13	3	52.9	9	1980	1264	452.942
14	1	93.6	9			16.289
15	2	94.2	9	1403		506.747
16	2	80.4	9	1003		264.065
17	1	77.4	9			532.882

TYPE 5 PARAMETER SHEET

Rohde & Schwarz
Pulse Sequencer

Trial Number : 14

Bursts in Trial: 9

Burst	Number of Pulses	Pulse Width (µsec)	Chirp Width (MHz)	Pulse 1-to-2 PRI (µsec)	Pulse 2-to-3 PRI (µsec)	Start Location Within Interval (msec)
1	2	91	6	1573		264.102
2	2	99.9	6	1657		386.867
3	1	97.9	6			339.143
4	3	72.1	6	1694	1821	1197.25
5	2	91	6	1180		453.317
6	1	62.8	6			1298.483
7	2	53.3	6	1643		1282.83
8	2	63.8	6	1188		822.467
9	1	86.3	6			150.033

TYPE 5 PARAMETER SHEET

Rohde & Schwarz
Pulse Sequencer

Trial Number : 15

Bursts in Trial: 13

Burst	Number of Pulses	Pulse Width (µsec)	Chirp Width (MHz)	Pulse 1-to-2 PRI (µsec)	Pulse 2-to-3 PRI (µsec)	Start Location Within Interval (msec)
1	3	68.4	6	1400	1741	914.879
2	1	97.9	6			353.873
3	3	64.1	6	1802	1093	96.046
4	1	66.9	6			845.999
5	3	71.7	6	1861	1979	92.322
6	2	60.9	6	1190		501.855
7	1	71.1	6			545.358
8	1	85.1	6			827.762
9	2	50.8	6	1492		358.925
10	2	56.9	6	1550		77.718
11	3	85.1	6	1060	1298	396.131
12	2	58.1	6	1630		700.454
13	3	98.5	6	1248	1415	657.977

TYPE 5 PARAMETER SHEET

Rohde & Schwarz
Pulse Sequencer

Trial Number : 16

Bursts in Trial: 8

Burst	Number of Pulses	Pulse Width (µsec)	Chirp Width (MHz)	Pulse 1-to-2 PRI (µsec)	Pulse 2-to-3 PRI (µsec)	Start Location Within Interval (msec)
1	3	52	5	1209	1032	1393.9
2	2	85	5	1238		315.82
3	3	67.2	5	1382	1005	1057.34
4	2	93.9	5	1728		676.63
5	2	99.2	5	1805		317.89
6	3	89.2	5	1410	1867	1103.01
7	3	76.1	5	1226	1891	693.34
8	1	87.8	5			1417.2

TYPE 5 PARAMETER SHEET

Rohde & Schwarz
Pulse Sequencer

Trial Number : 17

Bursts in Trial: 18

Burst	Number of Pulses	Pulse Width (µsec)	Chirp Width (MHz)	Pulse 1-to-2 PRI (µsec)	Pulse 2-to-3 PRI (µsec)	Start Location Within Interval (msec)
1	2	61.8	5	1182		500.711
2	3	95.4	5	1765	1057	142.638
3	2	66.2	5	1302		192.657
4	3	84.4	5	1922	1162	650.19
5	2	82.5	5	1799		504.053
6	2	57.4	5	1281		566.077
7	2	85.8	5	1087		498.73
8	3	69.9	5	1884	1591	563.053
9	3	69.8	5	1059	1643	195.647
10	2	66.6	5	1965		225.59
11	3	70.4	5	1414	1486	404.993
12	3	90	5	1762	1017	326.137
13	1	66.6	5			638.84
14	2	73.9	5	1526		95.543
15	1	78.7	5			360.747
16	2	50.7	5	1325		4.1
17	2	99.9	5	1179		215.833
18	1	62.9	5			463.867

TYPE 5 PARAMETER SHEET

Rohde & Schwarz
Pulse Sequencer

Trial Number : 18

Bursts in Trial: 16

Burst	Number of Pulses	Pulse Width (µsec)	Chirp Width (MHz)	Pulse 1-to-2 PRI (µsec)	Pulse 2-to-3 PRI (µsec)	Start Location Within Interval (msec)
1	2	83.4	10	1689		355.284
2	2	86.3	10	1362		693.23
3	3	71.4	10	1690	1978	384.96
4	2	83.1	10	1839		161.35
5	2	68.5	10	1296		398.23
6	3	80.8	10	1913	1454	710.47
7	2	57.1	10	1478		57.22
8	3	75.7	10	1588	1077	309.56
9	1	92.8	10			493.6
10	2	66.3	10	1981		19.85
11	3	76.6	10	1275	1911	245.88
12	3	51.4	10	1412	1983	99.16
13	2	88.7	10	1497		529.08
14	1	98.9	10			654.9
15	2	82.2	10	1829		441.2
16	2	61.9	10	1344		447.5

TYPE 5 PARAMETER SHEET

Rohde & Schwarz
Pulse Sequencer

Trial Number : 19

Bursts in Trial: 12

Burst	Number of Pulses	Pulse Width (µsec)	Chirp Width (MHz)	Pulse 1-to-2 PRI (µsec)	Pulse 2-to-3 PRI (µsec)	Start Location Within Interval (msec)
1	2	57.6	13	1913		682.308
2	1	62.9	13			170.33
3	2	68.4	13	1718		17.02
4	1	80.2	13			154.7
5	2	85.5	13	1305		870.54
6	3	66.6	13	1472	1522	551.69
7	1	68	13			833.6
8	2	86.3	13	1370		101.29
9	3	97.9	13	1111	1293	20.27
10	3	75.9	13	1919	1290	959.31
11	1	89.5	13			23.5
12	2	57.2	13	1316		72.4

TYPE 5 PARAMETER SHEET

Rohde & Schwarz
Pulse Sequencer

Trial Number : 20

Bursts in Trial: 11

Burst	Number of Pulses	Pulse Width (µsec)	Chirp Width (MHz)	Pulse 1-to-2 PRI (µsec)	Pulse 2-to-3 PRI (µsec)	Start Location Within Interval (msec)
1	2	67.8	8	1710		693.485
2	2	98.7	8	1079		114.601
3	1	97.5	8			1052.322
4	1	59.8	8			1030.843
5	2	53.7	8	1451		233.894
6	3	60.1	8	1221	1558	119.515
7	3	75.3	8	1718	1579	322.285
8	2	52.5	8	1966		474.306
9	3	88.9	8	1487	1639	878.517
10	1	77.8	8			424.118
11	1	99.5	8			72.809

TYPE 5 PARAMETER SHEET

Rohde & Schwarz
Pulse Sequencer

Trial Number : 21

Bursts in Trial: 11

Burst	Number of Pulses	Pulse Width (µsec)	Chirp Width (MHz)	Pulse 1-to-2 PRI (µsec)	Pulse 2-to-3 PRI (µsec)	Start Location Within Interval (msec)
1	3	64.2	13	1976	1239	935.226
2	2	62.9	13	1068		572.881
3	2	86.9	13	1768		957.192
4	2	71.1	13	1297		1012.493
5	2	88.1	13	1959		416.964
6	1	73.7	13			251.605
7	3	99.7	13	1550	1049	652.735
8	3	55.9	13	1710	1600	1009.416
9	2	55.8	13	1782		473.777
10	2	95.9	13	1392		251.518
11	3	61.7	13	1744	1652	220.909

TYPE 5 PARAMETER SHEET

Rohde & Schwarz
Pulse Sequencer

Trial Number : 22

Bursts in Trial: 11

Burst	Number of Pulses	Pulse Width (µsec)	Chirp Width (MHz)	Pulse 1-to-2 PRI (µsec)	Pulse 2-to-3 PRI (µsec)	Start Location Within Interval (msec)
1	2	56.3	14	1218		703.06
2	2	54.1	14	1013		501.951
3	2	60	14	1188		404.502
4	3	60.5	14	1591	1811	174.613
5	2	82.4	14	1648		834.224
6	2	80.3	14	1719		282.535
7	2	69.1	14	1444		1008.585
8	2	67.9	14	1698		206.096
9	2	51.9	14	1693		761.637
10	2	51	14	1980		531.218
11	2	50.4	14	1756		124.609

TYPE 5 PARAMETER SHEET

Rohde & Schwarz
Pulse Sequencer

Trial Number : 23

Bursts in Trial: 17

Burst	Number of Pulses	Pulse Width (µsec)	Chirp Width (MHz)	Pulse 1-to-2 PRI (µsec)	Pulse 2-to-3 PRI (µsec)	Start Location Within Interval (msec)
1	3	99.1	15	1048	1529	132.548
2	2	60.3	15	1348		305.908
3	1	71.9	15			311.235
4	2	55.1	15	1202		390.583
5	1	65.2	15			687.221
6	2	93.1	15	1459		258.378
7	2	93.4	15	1105		309.436
8	2	87.7	15	1779		435.184
9	1	82.9	15			106.601
10	3	86.9	15	1392	1017	414.409
11	3	93.2	15	1771	1253	690.596
12	2	87.8	15	1305		436.074
13	3	59.6	15	1764	1003	443.542
14	2	79.4	15	1695		98.719
15	3	83.8	15	1731	1511	386.647
16	1	65	15			210.365
17	2	61.8	15	1899		224.282

TYPE 5 PARAMETER SHEET

Rohde & Schwarz
Pulse Sequencer

Trial Number : 24

Bursts in Trial: 13

Burst	Number of Pulses	Pulse Width (µsec)	Chirp Width (MHz)	Pulse 1-to-2 PRI (µsec)	Pulse 2-to-3 PRI (µsec)	Start Location Within Interval (msec)
1	2	62.8	10	1936		607.612
2	2	87.7	10	1432		480.743
3	2	74.4	10	1073		271.556
4	2	75.2	10	1735		136.759
5	1	58.1	10			703.312
6	3	71.9	10	1821	1375	528.025
7	3	88.9	10	1408	1988	204.768
8	1	99.4	10			858.542
9	3	95.7	10	1281	1028	396.195
10	3	96.3	10	1355	1564	109.588
11	3	93.7	10	1168	1339	499.051
12	1	79.9	10			511.854
13	2	78.7	10	1146		54.177

TYPE 5 PARAMETER SHEET

Rohde & Schwarz
Pulse Sequencer

Trial Number : 25

Bursts in Trial: 8

Burst	Number of Pulses	Pulse Width (µsec)	Chirp Width (MHz)	Pulse 1-to-2 PRI (µsec)	Pulse 2-to-3 PRI (µsec)	Start Location Within Interval (msec)
1	2	56.4	18	1224		216.769
2	2	70.3	18	1192		1061.26
3	2	92.9	18	1082		1175.67
4	2	61.6	18	1860		109.42
5	3	91.6	18	1529	1418	90.67
6	2	98	18	1138		1018.78
7	1	99.3	18			1376.8
8	2	86.3	18	1859		1354.6

TYPE 5 PARAMETER SHEET

Rohde & Schwarz
Pulse Sequencer

Trial Number : 26

Bursts in Trial: 9

Burst	Number of Pulses	Pulse Width (µsec)	Chirp Width (MHz)	Pulse 1-to-2 PRI (µsec)	Pulse 2-to-3 PRI (µsec)	Start Location Within Interval (msec)
1	1	61.8	11			416.614
2	3	73	11	1081	1198	626.507
3	2	82.8	11	1766		516.423
4	3	73.4	11	1788	1813	121.44
5	2	96.7	11	1937		977.277
6	3	77.1	11	1192	1631	718.103
7	3	62.2	11	1226	1684	851.74
8	1	53.5	11			318.147
9	2	81.1	11	1487		499.733

TYPE 5 PARAMETER SHEET

Rohde & Schwarz
Pulse Sequencer

Trial Number : 27

Bursts in Trial: 15

Burst	Number of Pulses	Pulse Width (µsec)	Chirp Width (MHz)	Pulse 1-to-2 PRI (µsec)	Pulse 2-to-3 PRI (µsec)	Start Location Within Interval (msec)
1	3	80.1	15	1335	1585	475.158
2	2	54.3	15	1110		388.61
3	3	80.7	15	1014	1134	665.32
4	1	59.4	15			375.9
5	2	94	15	1730		403.71
6	3	76.8	15	1584	1965	267.05
7	1	99.3	15			619.36
8	2	54.5	15	1146		785.2
9	3	60.9	15	1655	1268	107.27
10	2	65.6	15	1233		683.8
11	2	96.4	15	1269		767.45
12	1	73.2	15			574.06
13	1	66.5	15			223.43
14	1	50	15			483.3
15	1	70.7	15			703.3

TYPE 5 PARAMETER SHEET

Rohde & Schwarz
Pulse Sequencer

Trial Number : 28

Bursts in Trial: 16

Burst	Number of Pulses	Pulse Width (µsec)	Chirp Width (MHz)	Pulse 1-to-2 PRI (µsec)	Pulse 2-to-3 PRI (µsec)	Start Location Within Interval (msec)
1	1	53.9	19			251.352
2	1	73.4	19			118.625
3	2	55.6	19	1383		341.67
4	2	83.2	19	1016		114.23
5	3	67.8	19	1208	1032	43.22
6	2	80.2	19	1164		33.09
7	3	89.3	19	1749	1311	140.06
8	2	83.8	19	1941		502.32
9	3	58.3	19	1859	1539	251.25
10	3	92.6	19	1084	1466	662.23
11	1	57.1	19			350.09
12	2	78.7	19	1158		670.45
13	2	50.8	19	1028		257.44
14	2	54.2	19	1854		49.47
15	3	81.2	19	1258	1025	269.2
16	3	61.1	19	1559	1603	302.1

TYPE 5 PARAMETER SHEET

Rohde & Schwarz
Pulse Sequencer

Trial Number : 29

Bursts in Trial: 19

Burst	Number of Pulses	Pulse Width (µsec)	Chirp Width (MHz)	Pulse 1-to-2 PRI (µsec)	Pulse 2-to-3 PRI (µsec)	Start Location Within Interval (msec)
1	1	69.7	17			274.262
2	2	55.7	17	1794		605.571
3	3	59.4	17	1932	1092	315.622
4	1	61.5	17			95.413
5	2	86.9	17	1659		307.264
6	1	62.2	17			480.935
7	1	92.3	17			194.026
8	3	53.4	17	1571	1933	328.937
9	3	80.8	17	1193	1788	176.838
10	3	61	17	1001	1068	319.759
11	1	81.7	17			263.851
12	3	70.1	17	1920	1055	464.762
13	3	66.8	17	1756	1496	97.683
14	2	78.2	17	1207		309.354
15	2	51.9	17	1823		141.615
16	1	95.1	17			191.216
17	3	99.7	17	1317	1916	307.837
18	2	62.3	17	1981		98.458
19	3	62	17	1113	1588	319.279

TYPE 5 PARAMETER SHEET

Rohde & Schwarz
Pulse Sequencer

Trial Number : 30

Bursts in Trial: 13

Burst	Number of Pulses	Pulse Width (µsec)	Chirp Width (MHz)	Pulse 1-to-2 PRI (µsec)	Pulse 2-to-3 PRI (µsec)	Start Location Within Interval (msec)
1	1	87.4	7			90.607
2	3	52.7	7	1194	1535	505.313
3	1	95.8	7			496.396
4	2	65.9	7	1371		307.139
5	3	80	7	1294	1660	114.052
6	2	60.1	7	1201		435.615
7	2	77.4	7	1782		409.708
8	1	89.9	7			23.542
9	2	93.7	7	1771		757.525
10	2	88.7	7	1099		48.088
11	2	78.2	7	1315		611.961
12	2	79	7	1192		397.954
13	3	83.9	7	1887	1921	409.377

A.3 Radar Type 5 Parameters for 80 MHz Bandwidth

TYPE 5 PARAMETER SHEET						Rohde & Schwarz Pulse Sequencer
Trial Number : 1						
Bursts in Trial: 10						
Burst	**Number of Pulses**	**Pulse Width (µsec)**	**Chirp Width (MHz)**	**Pulse 1-to-2 PRI (µsec)**	**Pulse 2-to-3 PRI (µsec)**	**Start Location Within Interval (msec)**
1	3	80.3	10	1430	1309	366.977
2	3	95.6	10	1037	1303	955.82
3	2	73.6	10	1737		757.98
4	3	54.9	10	1735	1994	1095.28
5	2	73.8	10	1745		1114.34
6	3	85.4	10	1997	1810	564.7
7	1	94.1	10			1193.01
8	2	98.2	10	1489		403.02
9	2	67.7	10	1451		437
10	3	54.1	10	1773	1747	581.2

TYPE 5 PARAMETER SHEET

Rohde & Schwarz
Pulse Sequencer

Trial Number : 2

Bursts in Trial: 17

Burst	Number of Pulses	Pulse Width (µsec)	Chirp Width (MHz)	Pulse 1-to-2 PRI (µsec)	Pulse 2-to-3 PRI (µsec)	Start Location Within Interval (msec)
1	2	85.8	19	1029		148.616
2	2	52	19	1560		333.608
3	2	89.1	19	1996		376.615
4	1	50.1	19			613.503
5	3	95.5	19	1386	1687	144.681
6	2	86.3	19	1655		466.928
7	3	67.3	19	1107	1080	567.636
8	2	74.6	19	1016		523.104
9	3	57.8	19	1901	1680	517.531
10	3	98.8	19	1415	1794	270.379
11	2	82.6	19	1261		262.176
12	2	86.4	19	1777		357.624
13	2	59.2	19	1886		130.332
14	3	99.2	19	1391	1006	298.839
15	2	73.8	19	1349		23.177
16	2	99	19	1259		364.965
17	3	89	19	1369	1999	192.482

TYPE 5 PARAMETER SHEET

Rohde & Schwarz
Pulse Sequencer

Trial Number : 3

Bursts in Trial: 18

Burst	Number of Pulses	Pulse Width (µsec)	Chirp Width (MHz)	Pulse 1-to-2 PRI (µsec)	Pulse 2-to-3 PRI (µsec)	Start Location Within Interval (msec)
1	1	89.2	8			34.986
2	2	86.9	8	1435		190.123
3	3	92.2	8	1882	1437	655.947
4	2	53.5	8	1856		300.48
5	2	52.4	8	1341		52.063
6	2	58.3	8	1970		187.817
7	2	64.6	8	1973		379.12
8	2	76.5	8	1173		101.023
9	1	86.7	8			424.527
10	2	87.2	8	1462		33.25
11	2	68.7	8	1034		39.003
12	2	55.7	8	1051		437.237
13	3	68.4	8	1302	1697	83.85
14	1	88.8	8			132.473
15	2	84.9	8	1190		417.697
16	2	87.9	8	1450		642.6
17	3	60.1	8	1184	1999	492.233
18	3	82	8	1948	1263	392.167

TYPE 5 PARAMETER SHEET

Rohde & Schwarz
Pulse Sequencer

Trial Number : 4

Bursts in Trial: 10

Burst	Number of Pulses	Pulse Width (µsec)	Chirp Width (MHz)	Pulse 1-to-2 PRI (µsec)	Pulse 2-to-3 PRI (µsec)	Start Location Within Interval (msec)
1	1	98.9	15			959.752
2	3	91.8	15	1149	1101	207.95
3	2	93	15	1000		1183.61
4	2	98.6	15	1132		906.35
5	1	57.4	15			961.56
6	1	51.2	15			1032.45
7	2	98.6	15	1390		229.31
8	2	96.9	15	1944		1180.77
9	2	87.2	15	1293		71.45
10	2	79.5	15	1388		630.6

TYPE 5 PARAMETER SHEET

Rohde & Schwarz
Pulse Sequencer

Trial Number : 5

Bursts in Trial: 19

Burst	Number of Pulses	Pulse Width (µsec)	Chirp Width (MHz)	Pulse 1-to-2 PRI (µsec)	Pulse 2-to-3 PRI (µsec)	Start Location Within Interval (msec)
1	1	53.9	13			538.937
2	2	93.5	13	1597		306.837
3	3	67.2	13	1677	1305	31.352
4	2	66.1	13	1858		37.563
5	3	90	13	1901	1329	52.544
6	2	82.6	13	1042		134.065
7	2	99.2	13	1425		35.486
8	2	61.5	13	1086		56.277
9	1	77.3	13			26.658
10	3	79.2	13	1716	1541	167.199
11	2	89.9	13	1957		149.101
12	2	86.1	13	1816		318.342
13	1	67.3	13			439.323
14	2	58.6	13	1783		213.844
15	1	75.4	13			565.465
16	1	92.5	13			88.906
17	2	50	13	1052		525.037
18	2	57.2	13	1404		615.258
19	2	67	13	1850		619.679

TYPE 5 PARAMETER SHEET

Rohde & Schwarz
Pulse Sequencer

Trial Number : 6

Bursts in Trial: 16

Burst	Number of Pulses	Pulse Width (µsec)	Chirp Width (MHz)	Pulse 1-to-2 PRI (µsec)	Pulse 2-to-3 PRI (µsec)	Start Location Within Interval (msec)
1	2	91.8	18	1568		669.847
2	3	92.8	18	1990	1148	633.2
3	1	68.2	18			205.6
4	2	83.9	18	1674		733.44
5	3	65	18	1208	1613	248.29
6	1	55.2	18			59.88
7	2	55.5	18	1646		22.84
8	3	97.6	18	1585	1028	204.54
9	3	58.1	18	1191	1533	447.73
10	1	66.3	18			663.59
11	2	94.4	18	1368		217.33
12	1	88	18			52.58
13	3	53.8	18	1323	1877	35.39
14	3	98.7	18	1255	1369	488.6
15	3	89.3	18	1911	1310	253.5
16	2	70.6	18	1887		727.5

TYPE 5 PARAMETER SHEET

Rohde & Schwarz
Pulse Sequencer

Trial Number : 7

Bursts in Trial: 9

Burst	Number of Pulses	Pulse Width (µsec)	Chirp Width (MHz)	Pulse 1-to-2 PRI (µsec)	Pulse 2-to-3 PRI (µsec)	Start Location Within Interval (msec)
1	3	83.4	7	1334	1204	1277.05
2	1	81.2	7			979.467
3	2	60.6	7	1131		1115.683
4	3	87.4	7	1793	1814	634.02
5	2	88.9	7	1846		454.177
6	1	89	7			513.583
7	2	68	7	1279		509.37
8	2	82.6	7	1904		489.357
9	1	71.5	7			676.833

TYPE 5 PARAMETER SHEET

Rohde & Schwarz
Pulse Sequencer

Trial Number : 8

Bursts in Trial: 16

Burst	Number of Pulses	Pulse Width (µsec)	Chirp Width (MHz)	Pulse 1-to-2 Spacing (µsec)	Pulse 2-to-3 PRI (µsec)	Start Location Within Interval (msec)
1	2	59.7	16	1092		3.874
2	3	58.5	16	1704	1503	284.27
3	2	67.4	16	1239		450.72
4	1	94.1	16			593.47
5	3	89.3	16	1652	1668	553.92
6	3	53.2	16	1440	1242	662.14
7	1	89.4	16			181.75
8	2	78.3	16	1133		81.36
9	2	96.2	16	1541		548.5
10	1	83.8	16			13.25
11	2	81.4	16	1651		86.2
12	1	89.9	16			312.02
13	2	54.2	16	1730		336.58
14	3	57.7	16	1503	1652	207.14
15	2	60.9	16	1865		548.6
16	2	86.6	16	1822		653.3

TYPE 5 PARAMETER SHEET

Rohde & Schwarz
Pulse Sequencer

Trial Number : 9

Bursts in Trial: 11

Burst	Number of Pulses	Pulse Width (µsec)	Chirp Width (MHz)	Pulse 1-to-2 PRI (µsec)	Pulse 2-to-3 PRI (µsec)	Start Location Within Interval (msec)
1	2	79.3	13	1025		86.301
2	2	68.7	13	1783		912.931
3	1	89.1	13			708.402
4	1	55.1	13			324.503
5	3	85.1	13	1693	1727	515.974
6	2	57.7	13	1286		759.065
7	2	83.2	13	1134		462.915
8	2	53.8	13	1917		341.596
9	3	99.2	13	1648	1234	881.117
10	2	79.9	13	1879		83.388
11	3	77.7	13	1509	1460	437.709

TYPE 5 PARAMETER SHEET

Rohde & Schwarz
Pulse Sequencer

Trial Number : 10

Bursts in Trial: 20

Burst	Number of Pulses	Pulse Width (µsec)	Chirp Width (MHz)	Pulse 1-to-2 PRI (µsec)	Pulse 2-to-3 PRI (µsec)	Start Location Within Interval (msec)
1	2	76.5	19	1636		176.653
2	3	57	19	1890	1181	191.238
3	3	68.2	19	1179	1622	243.85
4	2	79	19	1829		145.67
5	2	78.8	19	1786		353.14
6	3	67.6	19	1458	1575	190.29
7	3	90.2	19	1332	1820	284.25
8	2	53.5	19	1363		282.22
9	3	69.1	19	1396	1836	272.7
10	3	73.4	19	1346	1206	507.55
11	1	81.2	19			36.89
12	1	86	19			306.74
13	2	67.2	19	1476		366.15
14	2	58.5	19	1129		229.58
15	2	92.8	19	1619		271.58
16	2	99.5	19	1146		334.83
17	2	87.8	19	1743		451.1
18	2	98	19	1496		311.5
19	1	94.7	19			14.9
20	1	70.3	19			102.9

TYPE 5 PARAMETER SHEET

Rohde & Schwarz
Pulse Sequencer

Trial Number : 11

Bursts in Trial: 19

Burst	Number of Pulses	Pulse Width (µsec)	Chirp Width (MHz)	Pulse 1-to-2 PRI (µsec)	Pulse 2-to-3 PRI (µsec)	Start Location Within Interval (msec)
1	3	56	9	1657	1078	57.243
2	1	62.3	9			406.301
3	2	80.2	9	1900		284.462
4	3	52.2	9	1167	1546	251.713
5	3	80.2	9	1326	1440	114.664
6	2	62.1	9	1620		103.455
7	1	64.7	9			170.956
8	2	99.4	9	1150		547.997
9	2	53.5	9	1428		154.638
10	1	91.8	9			527.739
11	2	72.2	9	1559		402.221
12	1	62.2	9			307.062
13	3	75.3	9	1668	1916	435.113
14	3	77.7	9	1319	1114	367.994
15	1	82.1	9			613.495
16	1	81.4	9			66.756
17	3	88.5	9	1257	1788	47.837
18	2	98.1	9	1406		451.358
19	3	90.4	9	1344	1173	519.679

TYPE 5 PARAMETER SHEET

Rohde & Schwarz
Pulse Sequencer

Trial Number : 12

Bursts in Trial: 16

Burst	Number of Pulses	Pulse Width (µsec)	Chirp Width (MHz)	Pulse 1-to-2 PRI (µsec)	Pulse 2-to-3 PRI (µsec)	Start Location Within Interval (msec)
1	2	87.6	15	1854		281.744
2	2	74.8	15	1762		614.23
3	1	87	15			738.85
4	3	78.4	15	1578	1692	714.04
5	2	58.8	15	1143		406.16
6	2	88.9	15	1548		265.06
7	2	82.2	15	1169		232
8	1	91.4	15			113.25
9	2	71	15	1486		142.42
10	2	87.9	15	1950		523.87
11	2	83.1	15	1646		378.64
12	1	51.8	15			443.45
13	2	87.6	15	1786		567.14
14	1	88.3	15			488.5
15	2	94.3	15	1286		725.2
16	2	68.8	15	1611		436.1

TYPE 5 PARAMETER SHEET

Rohde & Schwarz
Pulse Sequencer

Trial Number : 13

Bursts in Trial: 13

Burst	Number of Pulses	Pulse Width (µsec)	Chirp Width (MHz)	Pulse 1-to-2 PRI (µsec)	Pulse 2-to-3 PRI (µsec)	Start Location Within Interval (msec)
1	2	82.2	17	1899		110.034
2	2	84.9	17	1763		164.143
3	2	79.1	17	1900		916.536
4	3	72.7	17	1670	1427	567.229
5	2	99.7	17	1928		697.442
6	3	76.5	17	1665	1600	854.845
7	1	78.3	17			721.198
8	2	88.1	17	1667		726.552
9	2	97.3	17	1988		416.665
10	1	73	17			117.118
11	2	66.7	17	1567		352.581
12	1	61.5	17			669.054
13	2	84.2	17	1721		859.877

TYPE 5 PARAMETER SHEET

Rohde & Schwarz
Pulse Sequencer

Trial Number : 14

Bursts in Trial: 12

Burst	Number of Pulses	Pulse Width (µsec)	Chirp Width (MHz)	Pulse 1-to-2 PRI (µsec)	Pulse 2-to-3 PRI (µsec)	Start Location Within Interval (msec)
1	2	76.8	18	1543		778.882
2	3	95.1	18	1216	1057	690.88
3	3	60.3	18	1603	1574	739.73
4	2	58.8	18	1341		2.68
5	2	55.7	18	1712		667.91
6	2	96.8	18	1222		566.76
7	1	85.1	18			567.61
8	3	80.8	18	1398	1431	151.25
9	3	71.7	18	1408	1538	179.88
10	2	85.1	18	1966		110.15
11	1	65.3	18			410.6
12	2	69.2	18	1655		355

TYPE 5 PARAMETER SHEET

Rohde & Schwarz
Pulse Sequencer

Trial Number : 15

Bursts in Trial: 17

Burst	Number of Pulses	Pulse Width (µsec)	Chirp Width (MHz)	Pulse 1-to-2 PRI (µsec)	Pulse 2-to-3 PRI (µsec)	Start Location Within Interval (msec)
1	1	66.9	13			411.717
2	1	94.8	13			187.834
3	1	74.4	13			380.435
4	1	56.8	13			525.173
5	2	95.7	13	1816		576.301
6	3	71.7	13	1097	1151	432.228
7	3	59.2	13	1177	1037	347.466
8	2	58.8	13	1605		464.144
9	1	99	13			371.831
10	3	92.4	13	1581	1464	488.979
11	2	90.9	13	1958		668.686
12	3	77.4	13	1069	1559	658.324
13	3	89.9	13	1317	1823	667.772
14	2	90.3	13	2000		116.359
15	2	82.3	13	1604		158.947
16	3	68.8	13	1151	1177	390.165
17	2	67.5	13	1511		214.282

TYPE 5 PARAMETER SHEET

Rohde & Schwarz
Pulse Sequencer

Trial Number : 16

Bursts in Trial: 16

Burst	Number of Pulses	Pulse Width (µsec)	Chirp Width (MHz)	Pulse 1-to-2 PRI (µsec)	Pulse 2-to-3 PRI (µsec)	Start Location Within Interval (msec)
1	3	94.8	11	1682	1444	88.08
2	1	69.2	11			363.14
3	2	71.4	11	1549		541.83
4	3	50.6	11	1847	1729	477.57
5	1	59.9	11			532.59
6	1	87.9	11			279.22
7	1	83.4	11			196.27
8	2	71.6	11	1338		222.36
9	3	50.6	11	1531	1964	695.1
10	2	52.9	11	1216		4.76
11	3	80.8	11	1236	1124	133.27
12	2	92.2	11	1662		679.63
13	1	60	11			303.1
14	2	75	11	1052		396.3
15	1	100	11			743.3
16	3	96	11	1593	1146	246.4

TYPE 5 PARAMETER SHEET

Rohde & Schwarz
Pulse Sequencer

Trial Number : 17

Bursts in Trial: 20

Burst	Number of Pulses	Pulse Width (µsec)	Chirp Width (MHz)	Pulse 1-to-2 PRI (µsec)	Pulse 2-to-3 PRI (µsec)	Start Location Within Interval (msec)
1	3	57.4	13	1541	1339	123.757
2	2	64.1	13	1490		157.381
3	1	93.8	13			277.99
4	2	61.8	13	1896		457.13
5	2	87.5	13	1232		130.46
6	2	52.3	13	1813		186.09
7	1	70.6	13			275.65
8	2	70.4	13	1376		467.07
9	3	62.1	13	1106	1572	351.11
10	2	99.9	13	1838		271.27
11	2	71.6	13	1435		3.06
12	2	69.7	13	1523		524.48
13	2	89.7	13	1576		242.88
14	2	69.4	13	1412		49.65
15	2	93.7	13	1097		146.24
16	3	92	13	1621	1761	104.82
17	2	57.5	13	1079		487.5
18	1	85.9	13			234.4
19	2	81.4	13	1227		499.3
20	2	70.8	13	1477		205.7

TYPE 5 PARAMETER SHEET

Rohde & Schwarz
Pulse Sequencer

Trial Number : 18

Bursts in Trial: 8

Burst	Number of Pulses	Pulse Width (µsec)	Chirp Width (MHz)	Pulse 1-to-2 PRI (µsec)	Pulse 2-to-3 PRI (µsec)	Start Location Within Interval (msec)
1	3	93.8	8	1278	1357	631.559
2	2	62.5	8	1260		208.5
3	2	78.2	8	1550		945.46
4	3	55.8	8	1735	1342	662.46
5	2	62.2	8	1094		491.66
6	3	84.6	8	1098	1688	916.51
7	3	57.7	8	1455	1085	1218.4
8	2	51.6	8	1906		1406.3

TYPE 5 PARAMETER SHEET

Rohde & Schwarz
Pulse Sequencer

Trial Number : 19

Bursts in Trial: 17

Burst	Number of Pulses	Pulse Width (µsec)	Chirp Width (MHz)	Pulse 1-to-2 PRI (µsec)	Pulse 2-to-3 PRI (µsec)	Start Location Within Interval (msec)
1	2	66	14	1937		526.433
2	3	77.4	14	1288	1645	405.898
3	3	97.4	14	1138	1380	489.505
4	2	55	14	1125		305.493
5	1	84.3	14			324.271
6	1	89.4	14			99.048
7	2	99.2	14	1580		424.476
8	2	51.1	14	1104		176.544
9	2	52.4	14	1126		131.801
10	3	61.3	14	1774	1597	20.419
11	2	50.8	14	1333		14.576
12	1	68.7	14			467.864
13	2	71.6	14	1293		429.762
14	1	67.5	14			286.559
15	3	71.5	14	1647	1439	243.647
16	1	93.6	14			546.165
17	2	83	14	1667		368.682

TYPE 5 PARAMETER SHEET

Rohde & Schwarz
Pulse Sequencer

Trial Number : 20

Bursts in Trial: 9

Burst	Number of Pulses	Pulse Width (µsec)	Chirp Width (MHz)	Pulse 1-to-2 PRI (µsec)	Pulse 2-to-3 PRI (µsec)	Start Location Within Interval (msec)
1	1	83.2	7			664.162
2	2	62.3	7	1736		152.487
3	2	72.3	7	1981		434.313
4	3	69.9	7	1143	1653	34.72
5	1	96	7			84.887
6	3	94.3	7	1558	1134	894.743
7	1	61.8	7			229.16
8	2	53	7	1077		1195.567
9	2	91.6	7	1241		1102.633

TYPE 5 PARAMETER SHEET

Rohde & Schwarz
Pulse Sequencer

Trial Number : 21

Bursts in Trial: 9

Burst	Number of Pulses	Pulse Width (µsec)	Chirp Width (MHz)	Pulse 1-to-2 PRI (µsec)	Pulse 2-to-3 PRI (µsec)	Start Location Within Interval (msec)
1	1	69.1	10			220.487
2	2	62.2	10	1068		455.537
3	1	93.3	10			769.263
4	3	74.4	10	1116	1647	118.56
5	1	79.3	10			783.257
6	2	60.8	10	1605		903.523
7	2	98.9	10	1449		71.89
8	2	86.7	10	1554		453.347
9	1	68.1	10			1048.733

TYPE 5 PARAMETER SHEET

Rohde & Schwarz
Pulse Sequencer

Trial Number : 22

Bursts in Trial: 15

Burst	Number of Pulses	Pulse Width (µsec)	Chirp Width (MHz)	Pulse 1-to-2 PRI (µsec)	Pulse 2-to-3 PRI (µsec)	Start Location Within Interval (msec)
1	1	81.8	10			175.403
2	2	78.5	10	1794		222.88
3	2	96.6	10	1767		409.94
4	3	98.7	10	1009	1798	750.35
5	2	51.1	10	1955		623.32
6	2	69.9	10	1306		246.91
7	1	71	10			20.81
8	1	94.2	10			470.84
9	2	63.9	10	1742		140.17
10	1	96.4	10			99.89
11	2	75.9	10	1786		533.27
12	2	93.6	10	1223		441.01
13	1	96.9	10			374.14
14	1	75.6	10			768.6
15	2	73.3	10	1649		490.3

TYPE 5 PARAMETER SHEET

Rohde & Schwarz
Pulse Sequencer

Trial Number : 23

Bursts in Trial: 11

Burst	Number of Pulses	Pulse Width (µsec)	Chirp Width (MHz)	Pulse 1-to-2 PRI (µsec)	Pulse 2-to-3 PRI (µsec)	Start Location Within Interval (msec)
1	2	69.6	15	1252		805.932
2	2	81.2	15	1206		709.381
3	2	51.2	15	1900		596.442
4	3	62.1	15	1351	1577	837.253
5	1	54.6	15			684.354
6	1	77	15			916.325
7	1	86.6	15			301.715
8	3	72.3	15	1750	1410	292.186
9	3	74.1	15	1913	1051	680.437
10	1	71.3	15			46.578
11	2	51.8	15	1276		924.009

TYPE 5 PARAMETER SHEET

Rohde & Schwarz
Pulse Sequencer

Trial Number : 24

Bursts in Trial: 14

Burst	Number of Pulses	Pulse Width (µsec)	Chirp Width (MHz)	Pulse 1-to-2 PRI (µsec)	Pulse 2-to-3 PRI (µsec)	Start Location Within Interval (msec)
1	3	53.6	10	1493	1174	412.24
2	2	57.8	10	1754		728.287
3	3	66.6	10	1995	1384	706.864
4	2	82.1	10	1998		831.071
5	1	83.8	10			388.839
6	1	67	10			168.296
7	3	98.9	10	1831	1138	6.493
8	3	50.9	10	1627	1842	734.04
9	3	73.7	10	1227	1025	118.397
10	1	76.8	10			243.704
11	1	51.4	10			103.061
12	3	83.2	10	1522	1489	376.289
13	2	77.6	10	1166		423.586
14	2	87.6	10	1172		785.143

TYPE 5 PARAMETER SHEET

Rohde & Schwarz
Pulse Sequencer

Trial Number : 25

Bursts in Trial: 9

Burst	Number of Pulses	Pulse Width (µsec)	Chirp Width (MHz)	Pulse 1-to-2 PRI (µsec)	Pulse 2-to-3 PRI (µsec)	Start Location Within Interval (msec)
1	1	95.5	5			590.992
2	2	82.7	5	1410		688.697
3	2	71.3	5	1218		1223.343
4	2	70.8	5	1375		638.55
5	1	85.2	5			168.787
6	3	81.6	5	1770	1988	42.613
7	2	70.7	5	1593		1324.25
8	1	81.3	5			279.427
9	3	84.8	5	1077	1211	983.833

TYPE 5 PARAMETER SHEET

Rohde & Schwarz
Pulse Sequencer

Trial Number : 26

Bursts in Trial: 8

Burst	Number of Pulses	Pulse Width (µsec)	Chirp Width (MHz)	Pulse 1-to-2 PRI (µsec)	Pulse 2-to-3 PRI (µsec)	Start Location Within Interval (msec)
1	3	84.7	16	1372	1347	868.192
2	3	88.7	16	1786	1232	123.49
3	3	78.5	16	1397	1390	615.2
4	1	97.1	16			300.55
5	2	94.4	16	1485		1468.17
6	3	53.9	16	1236	1299	858.04
7	1	52.6	16			355.86
8	3	96.8	16	1643	1115	1149.9

TYPE 5 PARAMETER SHEET

Rohde & Schwarz
Pulse Sequencer

Trial Number : 27

Bursts in Trial: 16

Burst	Number of Pulses	Pulse Width (µsec)	Chirp Width (MHz)	Pulse 1-to-2 PRI (µsec)	Pulse 2-to-3 PRI (µsec)	Start Location Within Interval (msec)
1	1	50	17			269.3
2	3	68.3	17	1172	1010	701.05
3	2	70.4	17	1659		359.6
4	3	99.9	17	1762	1644	527.8
5	1	55.5	17			220.03
6	2	65.6	17	1755		41.73
7	2	95.7	17	1625		130.33
8	2	59.6	17	1251		388.26
9	2	59.9	17	1337		156.94
10	1	88.8	17			517.92
11	2	66.6	17	1766		239.45
12	2	97.2	17	1267		300.32
13	2	71.9	17	1682		687.82
14	2	93.3	17	1723		384.1
15	2	75.8	17	1937		44.5
16	2	63.8	17	1121		507.8

TYPE 5 PARAMETER SHEET

Rohde & Schwarz
Pulse Sequencer

Trial Number : 28

Bursts in Trial: 9

Burst	Number of Pulses	Pulse Width (µsec)	Chirp Width (MHz)	Pulse 1-to-2 PRI (µsec)	Pulse 2-to-3 PRI (µsec)	Start Location Within Interval (msec)
1	2	93.6	13	1985		276.45
2	3	91.6	13	1275	1210	1105.037
3	2	91.6	13	1757		97.363
4	2	63.4	13	1684		1300.12
5	3	81.2	13	1877	1372	1120.487
6	1	99.1	13			1276.323
7	2	51.2	13	1371		757.51
8	1	67.8	13			40.477
9	3	63.5	13	1212	1267	506.633

TYPE 5 PARAMETER SHEET

Rohde & Schwarz
Pulse Sequencer

Trial Number : 29

Bursts in Trial: 16

Burst	Number of Pulses	Pulse Width (µsec)	Chirp Width (MHz)	Pulse 1-to-2 PRI (µsec)	Pulse 2-to-3 PRI (µsec)	Start Location Within Interval (msec)
1	1	50	14			383.313
2	2	73.7	14	1685		715.55
3	2	52.4	14	1875		538.02
4	3	86.5	14	1449	1072	440.83
5	3	94.5	14	1415	1000	115.41
6	2	59	14	1819		229.67
7	2	96.3	14	1893		209.29
8	2	54.9	14	1103		295
9	3	91.1	14	1218	1250	146
10	2	87.8	14	1386		566.42
11	3	94.3	14	1074	1963	619.7
12	2	64.7	14	1377		537.67
13	1	61.3	14			614.57
14	3	98	14	1630	1174	179.08
15	1	54.7	14			439.2
16	1	61.3	14			221.4

TYPE 5 PARAMETER SHEET

Rohde & Schwarz
Pulse Sequencer

Trial Number : 30

Bursts in Trial: 10

Burst	Number of Pulses	Pulse Width (µsec)	Chirp Width (MHz)	Pulse 1-to-2 PRI (µsec)	Pulse 2-to-3 PRI (µsec)	Start Location Within Interval (msec)
1	3	54.5	20	1112	1701	610.428
2	3	53.4	20	1099	1318	716.27
3	2	68.3	20	1366		68.98
4	2	55.1	20	1193		455.79
5	1	68.5	20			842.07
6	2	87.4	20	1982		241.84
7	1	84.9	20			73.86
8	2	70.3	20	1702		687.49
9	2	60	20	1567		608.8
10	1	82.9	20			1054.8

A.4 Radar Type 6 Parameters for 20 MHz Bandwidth

5260MHZ-20MHZ BW-T6-TRIAL-1						5260MHZ-20MHZ BW-T6-TRIAL-2					
Hop #	Freq. (GHz)	Hop #	Freq. (GHz)	Hop #	Freq. (GHz)	Hop #	Freq. (GHz)	Hop #	Freq. (GHz)	Hop #	Freq. (GHz)
1	5.463	35	5.687	69	5.673	1	5.527	35	5.719	69	5.406
2	5.459	36	5.391	70	5.506	2	5.634	36	5.308	70	5.706
3	5.453	37	5.268	71	5.452	3	5.321	37	5.3	71	5.593
4	5.349	38	5.259	72	5.5	4	5.528	38	5.641	72	5.481
5	5.287	39	5.353	73	5.593	5	5.523	39	5.359	73	5.334
6	5.344	40	5.369	74	5.384	6	5.376	40	5.38	74	5.365
7	5.386	41	5.534	75	5.409	7	5.358	41	5.723	75	5.508
8	5.554	42	5.435	76	5.461	8	5.496	42	5.407	76	5.265
9	5.466	43	5.6	77	5.579	9	5.383	43	5.669	77	5.582
10	5.314	44	5.611	78	5.565	10	5.457	44	5.293	78	5.423
11	5.701	45	5.581	79	5.608	11	5.501	45	5.5	79	5.399
12	5.545	46	5.283	80	5.438	12	5.415	46	5.326	80	5.721
13	5.512	47	5.634	81	5.614	13	5.441	47	5.545	81	5.466
14	5.485	48	5.495	82	5.612	14	5.607	48	5.621	82	5.676
15	5.591	49	5.606	83	5.627	15	5.566	49	5.266	83	5.393
16	5.644	50	5.42	84	5.498	16	5.692	50	5.652	84	5.525
17	5.519	51	5.374	85	5.63	17	5.568	51	5.68	85	5.503
18	5.422	52	5.717	86	5.544	18	5.694	52	5.572	86	5.302
19	5.645	53	5.667	87	5.457	19	5.425	53	5.372	87	5.475
20	5.352	54	5.317	88	5.399	20	5.336	54	5.626	88	5.546
21	5.362	55	5.626	89	5.672	21	5.331	55	5.671	89	5.618
22	5.479	56	5.468	90	5.264	22	5.672	56	5.59	90	5.418
23	5.511	57	5.61	91	5.716	23	5.444	57	5.529	91	5.701
24	5.56	58	5.429	92	5.603	24	5.567	58	5.519	92	5.283
25	5.564	59	5.333	93	5.323	25	5.286	59	5.469	93	5.282
26	5.53	60	5.576	94	5.351	26	5.316	60	5.395	94	5.28
27	5.664	61	5.272	95	5.492	27	5.69	61	5.713	95	5.537
28	5.723	62	5.347	96	5.295	28	5.258	62	5.452	96	5.65
29	5.663	63	5.698	97	5.655	29	5.304	63	5.254	97	5.53
30	5.31	64	5.4	98	5.646	30	5.724	64	5.583	98	5.554
31	5.588	65	5.562	99	5.501	31	5.318	65	5.345	99	5.323
32	5.549	66	5.59	100	5.548	32	5.698	66	5.373	100	5.405
33	5.542	67	5.251			33	5.693	67	5.646		
34	5.258	68	5.522			34	5.375	68	5.658		
NOTE: RED text = frequencies within the channel bandwidth (Fl and Fh).											

5260MHZ-20MHZ BW-T6-TRIAL-3						5260MHZ-20MHZ BW-T6-TRIAL-4					
Hop #	Freq. (GHz)	Hop #	Freq. (GHz)	Hop #	Freq. (GHz)	Hop #	Freq. (GHz)	Hop #	Freq. (GHz)	Hop #	Freq. (GHz)
1	5.611	35	5.703	69	5.401	1	5.719	35	5.632	69	5.312
2	5.692	36	5.588	70	5.307	2	5.528	36	5.423	70	5.285
3	5.698	37	5.504	71	5.47	3	5.522	37	5.701	71	5.557
4	5.273	38	5.301	72	5.61	4	5.579	38	5.696	72	5.682
5	5.627	39	5.691	73	5.508	5	5.462	39	5.269	73	5.707
6	5.426	40	5.552	74	5.593	6	5.669	40	5.359	74	5.432
7	5.57	41	5.545	75	5.39	7	5.714	41	5.315	75	5.361
8	5.337	42	5.279	76	5.318	8	5.326	42	5.375	76	5.474
9	5.413	43	5.342	77	5.631	9	5.672	43	5.667	77	5.396
10	5.251	44	5.324	78	5.582	10	5.343	44	5.32	78	5.641
11	5.481	45	5.302	79	5.464	11	5.605	45	5.352	79	5.539
12	5.274	46	5.25	80	5.421	12	5.48	46	5.705	80	5.34
13	5.336	47	5.335	81	5.446	13	5.458	47	5.316	81	5.476
14	5.327	48	5.272	82	5.618	14	5.563	48	5.542	82	5.674
15	5.595	49	5.642	83	5.402	15	5.571	49	5.398	83	5.358
16	5.523	50	5.547	84	5.483	16	5.455	50	5.508	84	5.356
17	5.529	51	5.311	85	5.63	17	5.505	51	5.392	85	5.497
18	5.387	52	5.722	86	5.513	18	5.581	52	5.454	86	5.509
19	5.296	53	5.422	87	5.546	19	5.35	53	5.558	87	5.345
20	5.572	54	5.493	88	5.356	20	5.414	54	5.301	88	5.709
21	5.257	55	5.532	89	5.403	21	5.253	55	5.346	89	5.679
22	5.601	56	5.629	90	5.686	22	5.618	56	5.72	90	5.481
23	5.485	57	5.385	91	5.27	23	5.4	57	5.296	91	5.421
24	5.292	58	5.411	92	5.721	24	5.329	58	5.58	92	5.59
25	5.31	59	5.72	93	5.332	25	5.485	59	5.347	93	5.438
26	5.357	60	5.624	94	5.377	26	5.451	60	5.655	94	5.537
27	5.482	61	5.581	95	5.621	27	5.389	61	5.629	95	5.627
28	5.423	62	5.371	96	5.7	28	5.413	62	5.364	96	5.37
29	5.473	63	5.362	97	5.694	29	5.468	63	5.418	97	5.339
30	5.389	64	5.566	98	5.615	30	5.562	64	5.545	98	5.585
31	5.255	65	5.457	99	5.685	31	5.265	65	5.57	99	5.555
32	5.492	66	5.442	100	5.49	32	5.703	66	5.718	100	5.651
33	5.579	67	5.487			33	5.639	67	5.604		
34	5.674	68	5.541			34	5.43	68	5.286		

NOTE: RED text = frequencies within the channel bandwidth (Fl and Fh).

5260MHZ-20MHZ BW-T6-TRIAL-5						5260MHZ-20MHZ BW-T6-TRIAL-6					
Hop #	Freq. (GHz)	Hop #	Freq. (GHz)	Hop #	Freq. (GHz)	Hop #	Freq. (GHz)	Hop #	Freq. (GHz)	Hop #	Freq. (GHz)
1	5.462	35	5.349	69	5.37	1	5.592	35	5.695	69	5.503
2	5.715	36	5.33	70	5.437	2	5.255	36	5.304	70	5.376
3	5.627	37	5.532	71	5.282	3	5.25	37	5.354	71	5.511
4	5.347	38	5.384	72	5.518	4	5.251	38	5.352	72	5.49
5	5.321	39	5.676	73	5.666	5	5.3	39	5.414	73	5.476
6	5.306	40	5.269	74	5.615	6	5.583	40	5.485	74	5.367
7	5.56	41	5.611	75	5.41	7	5.655	41	5.383	75	5.679
8	5.535	42	5.312	76	5.26	8	5.355	42	5.576	76	5.539
9	5.372	43	5.667	77	5.513	9	5.572	43	5.37	77	5.278
10	5.597	44	5.716	78	5.451	10	5.471	44	5.41	78	5.562
11	5.625	45	5.718	79	5.48	11	5.34	45	5.405	79	5.323
12	5.283	46	5.587	80	5.463	12	5.262	46	5.721	80	5.587
13	5.407	47	5.426	81	5.472	13	5.528	47	5.281	81	5.293
14	5.427	48	5.34	82	5.374	14	5.635	48	5.478	82	5.427
15	5.687	49	5.391	83	5.323	15	5.348	49	5.303	83	5.411
16	5.626	50	5.352	84	5.284	16	5.292	50	5.28	84	5.662
17	5.596	51	5.702	85	5.672	17	5.353	51	5.595	85	5.263
18	5.516	52	5.43	86	5.457	18	5.615	52	5.461	86	5.545
19	5.47	53	5.252	87	5.624	19	5.612	53	5.651	87	5.473
20	5.689	54	5.492	88	5.703	20	5.683	54	5.516	88	5.435
21	5.686	55	5.361	89	5.376	21	5.697	55	5.666	89	5.621
22	5.322	56	5.59	90	5.434	22	5.328	56	5.535	90	5.336
23	5.432	57	5.64	91	5.377	23	5.32	57	5.307	91	5.475
24	5.381	58	5.442	92	5.657	24	5.719	58	5.455	92	5.579
25	5.428	59	5.631	93	5.552	25	5.677	59	5.531	93	5.468
26	5.313	60	5.44	94	5.502	26	5.702	60	5.693	94	5.55
27	5.266	61	5.674	95	5.493	27	5.557	61	5.254	95	5.5
28	5.373	62	5.3	96	5.338	28	5.538	62	5.686	96	5.674
29	5.42	63	5.287	97	5.524	29	5.645	63	5.403	97	5.498
30	5.422	64	5.366	98	5.541	30	5.556	64	5.654	98	5.286
31	5.564	65	5.285	99	5.27	31	5.377	65	5.338	99	5.65
32	5.435	66	5.429	100	5.714	32	5.613	66	5.51	100	5.366
33	5.443	67	5.459			33	5.252	67	5.324		
34	5.642	68	5.335			34	5.541	68	5.38		

NOTE: RED text = frequencies within the channel bandwidth (Fl and Fh).

5260MHZ-20MHZ BW-T6-TRIAL-7						5260MHZ-20MHZ BW-T6-TRIAL-8					
Hop #	Freq. (GHz)	Hop #	Freq. (GHz)	Hop #	Freq. (GHz)	Hop #	Freq. (GHz)	Hop #	Freq. (GHz)	Hop #	Freq. (GHz)
1	5.252	35	5.671	69	5.701	1	5.349	35	5.332	69	5.709
2	5.708	36	5.677	70	5.672	2	5.505	36	5.67	70	5.318
3	5.49	37	5.524	71	5.57	3	5.306	37	5.68	71	5.551
4	5.257	38	5.48	72	5.651	4	5.403	38	5.534	72	5.561
5	5.255	39	5.373	73	5.665	5	5.313	39	5.619	73	5.552
6	5.597	40	5.414	74	5.397	6	5.654	40	5.664	74	5.395
7	5.46	41	5.602	75	5.281	7	5.659	41	5.445	75	5.314
8	5.632	42	5.47	76	5.501	8	5.63	42	5.617	76	5.683
9	5.496	43	5.694	77	5.531	9	5.527	43	5.334	77	5.657
10	5.578	44	5.702	78	5.581	10	5.398	44	5.451	78	5.255
11	5.367	45	5.611	79	5.656	11	5.389	45	5.55	79	5.273
12	5.507	46	5.443	80	5.454	12	5.466	46	5.671	80	5.381
13	5.369	47	5.678	81	5.61	13	5.471	47	5.32	81	5.467
14	5.664	48	5.457	82	5.416	14	5.333	48	5.638	82	5.516
15	5.491	49	5.435	83	5.63	15	5.44	49	5.366	83	5.438
16	5.354	50	5.434	84	5.547	16	5.575	50	5.386	84	5.689
17	5.56	51	5.315	85	5.723	17	5.712	51	5.621	85	5.591
18	5.444	52	5.718	86	5.382	18	5.652	52	5.655	86	5.714
19	5.399	53	5.683	87	5.715	19	5.297	53	5.388	87	5.686
20	5.722	54	5.642	88	5.362	20	5.707	54	5.708	88	5.269
21	5.544	55	5.625	89	5.277	21	5.61	55	5.538	89	5.537
22	5.332	56	5.502	90	5.256	22	5.506	56	5.415	90	5.548
23	5.536	57	5.284	91	5.607	23	5.407	57	5.373	91	5.282
24	5.633	58	5.575	92	5.339	24	5.46	58	5.528	92	5.71
25	5.717	59	5.42	93	5.328	25	5.343	59	5.338	93	5.325
26	5.358	60	5.484	94	5.658	26	5.53	60	5.443	94	5.713
27	5.345	61	5.254	95	5.724	27	5.529	61	5.628	95	5.29
28	5.522	62	5.361	96	5.662	28	5.57	62	5.542	96	5.452
29	5.418	63	5.389	97	5.463	29	5.294	63	5.544	97	5.692
30	5.589	64	5.473	98	5.352	30	5.699	64	5.293	98	5.6
31	5.348	65	5.476	99	5.472	31	5.303	65	5.419	99	5.268
32	5.446	66	5.479	100	5.497	32	5.384	66	5.412	100	5.5
33	5.392	67	5.685			33	5.634	67	5.28		
34	5.456	68	5.697			34	5.326	68	5.454		

NOTE: RED text = frequencies within the channel bandwidth (Fl and Fh).

5260MHZ-20MHZ BW-T6-TRIAL-9						5260MHZ-20MHZ BW-T6-TRIAL-10					
Hop #	Freq. (GHz)	Hop #	Freq. (GHz)	Hop #	Freq. (GHz)	Hop #	Freq. (GHz)	Hop #	Freq. (GHz)	Hop #	Freq. (GHz)
1	5.685	35	5.262	69	5.621	1	5.684	35	5.665	69	5.395
2	5.707	36	5.63	70	5.305	2	5.526	36	5.401	70	5.549
3	5.453	37	5.306	71	5.459	3	5.667	37	5.559	71	5.276
4	5.291	38	5.526	72	5.382	4	5.604	38	5.637	72	5.305
5	5.416	39	5.622	73	5.527	5	5.564	39	5.64	73	5.262
6	5.482	40	5.681	74	5.51	6	5.585	40	5.29	74	5.493
7	5.468	41	5.341	75	5.557	7	5.494	41	5.571	75	5.501
8	5.462	42	5.546	76	5.346	8	5.687	42	5.522	76	5.271
9	5.609	43	5.294	77	5.285	9	5.428	43	5.595	77	5.264
10	5.656	44	5.479	78	5.71	10	5.344	44	5.373	78	5.495
11	5.664	45	5.271	79	5.512	11	5.409	45	5.676	79	5.601
12	5.299	46	5.572	80	5.489	12	5.421	46	5.569	80	5.711
13	5.411	47	5.347	81	5.673	13	5.439	47	5.455	81	5.678
14	5.649	48	5.642	82	5.455	14	5.627	48	5.351	82	5.432
15	5.573	49	5.435	83	5.637	15	5.399	49	5.307	83	5.476
16	5.309	50	5.357	84	5.293	16	5.375	50	5.336	84	5.636
17	5.366	51	5.576	85	5.476	17	5.607	51	5.326	85	5.551
18	5.633	52	5.657	86	5.674	18	5.534	52	5.411	86	5.481
19	5.342	53	5.339	87	5.315	19	5.25	53	5.506	87	5.434
20	5.517	54	5.535	88	5.4	20	5.699	54	5.701	88	5.347
21	5.436	55	5.325	89	5.689	21	5.584	55	5.318	89	5.297
22	5.322	56	5.485	90	5.545	22	5.437	56	5.458	90	5.662
23	5.524	57	5.369	91	5.676	23	5.464	57	5.719	91	5.527
24	5.323	58	5.646	92	5.504	24	5.465	58	5.325	92	5.329
25	5.472	59	5.577	93	5.392	25	5.609	59	5.563	93	5.404
26	5.586	60	5.344	94	5.662	26	5.632	60	5.261	94	5.695
27	5.273	61	5.447	95	5.27	27	5.502	61	5.463	95	5.659
28	5.68	62	5.466	96	5.373	28	5.429	62	5.643	96	5.573
29	5.693	63	5.686	97	5.48	29	5.445	63	5.332	97	5.519
30	5.596	64	5.303	98	5.393	30	5.466	64	5.352	98	5.324
31	5.308	65	5.488	99	5.677	31	5.694	65	5.651	99	5.379
32	5.356	66	5.663	100	5.429	32	5.557	66	5.339	100	5.426
33	5.427	67	5.368			33	5.561	67	5.533		
34	5.636	68	5.602			34	5.572	68	5.525		

NOTE: RED text = frequencies within the channel bandwidth (Fl and Fh).

5260MHZ-20MHZ BW-T6-TRIAL-11						5260MHZ-20MHZ BW-T6-TRIAL-12					
Hop #	Freq. (GHz)	Hop #	Freq. (GHz)	Hop #	Freq. (GHz)	Hop #	Freq. (GHz)	Hop #	Freq. (GHz)	Hop #	Freq. (GHz)
1	5.536	35	5.364	69	5.531	1	5.277	35	5.254	69	5.587
2	5.302	36	5.711	70	5.314	2	5.339	36	5.291	70	5.367
3	5.615	37	5.597	71	5.579	3	5.697	37	5.284	71	5.349
4	5.42	38	5.554	72	5.687	4	5.391	38	5.584	72	5.35
5	5.499	39	5.395	73	5.251	5	5.335	39	5.403	73	5.672
6	5.627	40	5.612	74	5.603	6	5.419	40	5.375	74	5.269
7	5.352	41	5.504	75	5.402	7	5.684	41	5.701	75	5.592
8	5.465	42	5.623	76	5.376	8	5.6	42	5.255	76	5.562
9	5.365	43	5.301	77	5.655	9	5.625	43	5.642	77	5.568
10	5.583	44	5.519	78	5.586	10	5.294	44	5.405	78	5.495
11	5.631	45	5.327	79	5.543	11	5.552	45	5.515	79	5.337
12	5.652	46	5.666	80	5.451	12	5.265	46	5.374	80	5.693
13	5.362	47	5.454	81	5.667	13	5.554	47	5.417	81	5.299
14	5.596	48	5.319	82	5.685	14	5.505	48	5.687	82	5.718
15	5.374	49	5.695	83	5.678	15	5.262	49	5.558	83	5.484
16	5.471	50	5.489	84	5.285	16	5.615	50	5.582	84	5.597
17	5.487	51	5.549	85	5.588	17	5.576	51	5.325	85	5.665
18	5.558	52	5.578	86	5.535	18	5.709	52	5.304	86	5.271
19	5.616	53	5.619	87	5.289	19	5.514	53	5.3	87	5.461
20	5.604	54	5.635	88	5.405	20	5.283	54	5.711	88	5.317
21	5.513	55	5.683	89	5.714	21	5.63	55	5.289	89	5.537
22	5.639	56	5.447	90	5.523	22	5.428	56	5.443	90	5.662
23	5.291	57	5.552	91	5.423	23	5.53	57	5.402	91	5.599
24	5.283	58	5.629	92	5.642	24	5.719	58	5.251	92	5.713
25	5.336	59	5.567	93	5.63	25	5.431	59	5.516	93	5.451
26	5.488	60	5.5	94	5.296	26	5.579	60	5.4	94	5.363
27	5.449	61	5.529	95	5.43	27	5.288	61	5.345	95	5.488
28	5.382	62	5.344	96	5.338	28	5.387	62	5.258	96	5.352
29	5.718	63	5.661	97	5.429	29	5.444	63	5.605	97	5.386
30	5.49	64	5.676	98	5.479	30	5.469	64	5.503	98	5.674
31	5.25	65	5.408	99	5.562	31	5.468	65	5.43	99	5.65
32	5.692	66	5.491	100	5.307	32	5.42	66	5.486	100	5.263
33	5.308	67	5.514			33	5.634	67	5.619		
34	5.353	68	5.273			34	5.481	68	5.369		

NOTE: RED text = frequencies within the channel bandwidth (Fl and Fh).

5260MHZ-20MHZ BW-T6-TRIAL-13						5260MHZ-20MHZ BW-T6-TRIAL-14					
Hop #	Freq. (GHz)	Hop #	Freq. (GHz)	Hop #	Freq. (GHz)	Hop #	Freq. (GHz)	Hop #	Freq. (GHz)	Hop #	Freq. (GHz)
1	5.567	35	5.639	69	5.697	1	5.581	35	5.467	69	5.63
2	5.25	36	5.406	70	5.568	2	5.627	36	5.475	70	5.427
3	5.584	37	5.662	71	5.332	3	5.268	37	5.685	71	5.341
4	5.336	38	5.279	72	5.457	4	5.303	38	5.381	72	5.529
5	5.268	39	5.645	73	5.585	5	5.412	39	5.485	73	5.535
6	5.526	40	5.277	74	5.54	6	5.604	40	5.273	74	5.255
7	5.615	41	5.694	75	5.608	7	5.511	41	5.513	75	5.641
8	5.436	42	5.549	76	5.454	8	5.593	42	5.668	76	5.681
9	5.587	43	5.389	77	5.447	9	5.357	43	5.558	77	5.315
10	5.411	44	5.696	78	5.691	10	5.649	44	5.257	78	5.348
11	5.271	45	5.351	79	5.616	11	5.645	45	5.396	79	5.614
12	5.702	46	5.685	80	5.338	12	5.391	46	5.374	80	5.46
13	5.398	47	5.421	81	5.374	13	5.53	47	5.66	81	5.291
14	5.643	48	5.565	82	5.571	14	5.353	48	5.659	82	5.368
15	5.551	49	5.684	83	5.71	15	5.332	49	5.369	83	5.468
16	5.531	50	5.68	84	5.461	16	5.384	50	5.461	84	5.49
17	5.261	51	5.443	85	5.26	17	5.301	51	5.29	85	5.661
18	5.361	52	5.675	86	5.312	18	5.652	52	5.34	86	5.445
19	5.38	53	5.481	87	5.381	19	5.351	53	5.473	87	5.434
20	5.511	54	5.415	88	5.321	20	5.536	54	5.367	88	5.44
21	5.519	55	5.334	89	5.445	21	5.579	55	5.464	89	5.684
22	5.534	56	5.471	90	5.383	22	5.648	56	5.447	90	5.472
23	5.593	57	5.274	91	5.5	23	5.32	57	5.657	91	5.31
24	5.32	58	5.291	92	5.642	24	5.456	58	5.474	92	5.352
25	5.317	59	5.487	93	5.448	25	5.484	59	5.519	93	5.293
26	5.709	60	5.466	94	5.59	26	5.311	60	5.656	94	5.261
27	5.695	61	5.399	95	5.412	27	5.698	61	5.486	95	5.407
28	5.45	62	5.366	96	5.402	28	5.547	62	5.265	96	5.43
29	5.501	63	5.266	97	5.435	29	5.489	63	5.515	97	5.708
30	5.313	64	5.606	98	5.632	30	5.431	64	5.505	98	5.528
31	5.55	65	5.401	99	5.482	31	5.617	65	5.538	99	5.439
32	5.254	66	5.635	100	5.273	32	5.471	66	5.504	100	5.305
33	5.469	67	5.653			33	5.256	67	5.673		
34	5.362	68	5.602			34	5.389	68	5.576		

NOTE: RED text = frequencies within the channel bandwidth (Fl and Fh).

5260MHZ-20MHZ BW-T6-TRIAL-15						5260MHZ-20MHZ BW-T6-TRIAL-16					
Hop #	Freq. (GHz)	Hop #	Freq. (GHz)	Hop #	Freq. (GHz)	Hop #	Freq. (GHz)	Hop #	Freq. (GHz)	Hop #	Freq. (GHz)
1	5.672	35	5.448	69	5.524	1	5.642	35	5.338	69	5.39
2	5.709	36	5.337	70	5.395	2	5.499	36	5.668	70	5.649
3	5.551	37	5.684	71	5.588	3	5.255	37	5.526	71	5.497
4	5.565	38	5.356	72	5.442	4	5.374	38	5.437	72	5.326
5	5.307	39	5.32	73	5.596	5	5.513	39	5.53	73	5.582
6	5.509	40	5.278	74	5.583	6	5.494	40	5.467	74	5.669
7	5.501	41	5.457	75	5.434	7	5.695	41	5.538	75	5.682
8	5.633	42	5.462	76	5.444	8	5.48	42	5.602	76	5.516
9	5.345	43	5.321	77	5.631	9	5.269	43	5.711	77	5.597
10	5.682	44	5.676	78	5.281	10	5.552	44	5.568	78	5.581
11	5.538	45	5.437	79	5.284	11	5.445	45	5.589	79	5.481
12	5.447	46	5.67	80	5.27	12	5.257	46	5.717	80	5.468
13	5.605	47	5.265	81	5.333	13	5.294	47	5.27	81	5.354
14	5.263	48	5.261	82	5.65	14	5.658	48	5.364	82	5.435
15	5.616	49	5.285	83	5.71	15	5.455	49	5.351	83	5.608
16	5.302	50	5.517	84	5.534	16	5.653	50	5.532	84	5.427
17	5.365	51	5.693	85	5.533	17	5.392	51	5.331	85	5.591
18	5.494	52	5.288	86	5.258	18	5.661	52	5.478	86	5.379
19	5.359	53	5.518	87	5.26	19	5.433	53	5.303	87	5.347
20	5.301	54	5.449	88	5.675	20	5.411	54	5.301	88	5.707
21	5.544	55	5.275	89	5.543	21	5.311	55	5.35	89	5.317
22	5.703	56	5.259	90	5.368	22	5.698	56	5.685	90	5.463
23	5.609	57	5.636	91	5.391	23	5.507	57	5.407	91	5.697
24	5.332	58	5.688	92	5.694	24	5.454	58	5.574	92	5.479
25	5.49	59	5.536	93	5.522	25	5.706	59	5.295	93	5.537
26	5.389	60	5.563	94	5.558	26	5.404	60	5.49	94	5.519
27	5.632	61	5.555	95	5.323	27	5.393	61	5.488	95	5.689
28	5.483	62	5.45	96	5.493	28	5.611	62	5.721	96	5.495
29	5.529	63	5.39	97	5.508	29	5.415	63	5.37	97	5.639
30	5.329	64	5.595	98	5.576	30	5.414	64	5.636	98	5.476
31	5.659	65	5.629	99	5.392	31	5.534	65	5.385	99	5.512
32	5.648	66	5.418	100	5.388	32	5.307	66	5.635	100	5.46
33	5.624	67	5.641			33	5.502	67	5.681		
34	5.256	68	5.396			34	5.426	68	5.262		

NOTE: RED text = frequencies within the channel bandwidth (Fl and Fh).

5260MHZ-20MHZ BW-T6-TRIAL-17						5260MHZ-20MHZ BW-T6-TRIAL-18					
Hop #	Freq. (GHz)	Hop #	Freq. (GHz)	Hop #	Freq. (GHz)	Hop #	Freq. (GHz)	Hop #	Freq. (GHz)	Hop #	Freq. (GHz)
1	5.343	35	5.394	69	5.503	1	5.657	35	5.591	69	5.437
2	5.367	36	5.476	70	5.514	2	5.307	36	5.522	70	5.504
3	5.601	37	5.695	71	5.547	3	5.694	37	5.282	71	5.273
4	5.638	38	5.493	72	5.684	4	5.474	38	5.572	72	5.265
5	5.71	39	5.416	73	5.49	5	5.434	39	5.409	73	5.604
6	5.284	40	5.316	74	5.29	6	5.594	40	5.553	74	5.297
7	5.321	41	5.288	75	5.423	7	5.687	41	5.68	75	5.509
8	5.325	42	5.707	76	5.594	8	5.459	42	5.446	76	5.285
9	5.565	43	5.261	77	5.389	9	5.421	43	5.503	77	5.32
10	5.356	44	5.611	78	5.556	10	5.645	44	5.701	78	5.479
11	5.486	45	5.282	79	5.648	11	5.609	45	5.414	79	5.62
12	5.716	46	5.51	80	5.473	12	5.389	46	5.311	80	5.58
13	5.422	47	5.458	81	5.681	13	5.653	47	5.322	81	5.641
14	5.561	48	5.3	82	5.629	14	5.48	48	5.561	82	5.363
15	5.353	49	5.662	83	5.455	15	5.684	49	5.563	83	5.619
16	5.364	50	5.454	84	5.403	16	5.492	50	5.321	84	5.36
17	5.683	51	5.591	85	5.669	17	5.614	51	5.345	85	5.525
18	5.59	52	5.385	86	5.671	18	5.497	52	5.433	86	5.39
19	5.491	53	5.427	87	5.641	19	5.692	53	5.59	87	5.505
20	5.462	54	5.718	88	5.711	20	5.688	54	5.541	88	5.312
21	5.535	55	5.579	89	5.513	21	5.351	55	5.64	89	5.349
22	5.702	56	5.572	90	5.481	22	5.681	56	5.352	90	5.428
23	5.619	57	5.469	91	5.404	23	5.699	57	5.623	91	5.466
24	5.537	58	5.27	92	5.347	24	5.57	58	5.478	92	5.406
25	5.318	59	5.294	93	5.372	25	5.518	59	5.454	93	5.53
26	5.408	60	5.304	94	5.516	26	5.496	60	5.667	94	5.574
27	5.577	61	5.668	95	5.714	27	5.686	61	5.554	95	5.618
28	5.566	62	5.724	96	5.402	28	5.597	62	5.628	96	5.697
29	5.443	63	5.252	97	5.398	29	5.577	63	5.689	97	5.549
30	5.552	64	5.694	98	5.617	30	5.305	64	5.388	98	5.589
31	5.616	65	5.655	99	5.512	31	5.354	65	5.582	99	5.484
32	5.411	66	5.434	100	5.279	32	5.658	66	5.679	100	5.636
33	5.581	67	5.278			33	5.477	67	5.506		
34	5.541	68	5.663			34	5.456	68	5.487		

NOTE: RED text = frequencies within the channel bandwidth (Fl and Fh).

5260MHZ-20MHZ BW-T6-TRIAL-19						5260MHZ-20MHZ BW-T6-TRIAL-20					
Hop #	Freq. (GHz)	Hop #	Freq. (GHz)	Hop #	Freq. (GHz)	Hop #	Freq. (GHz)	Hop #	Freq. (GHz)	Hop #	Freq. (GHz)
1	5.614	35	5.292	69	5.489	1	5.274	35	5.359	69	5.432
2	5.6	36	5.707	70	5.478	2	5.335	36	5.417	70	5.459
3	5.547	37	5.623	71	5.278	3	5.586	37	5.303	71	5.548
4	5.607	38	5.396	72	5.498	4	5.49	38	5.594	72	5.691
5	5.565	39	5.627	73	5.654	5	5.547	39	5.624	73	5.57
6	5.452	40	5.391	74	5.433	6	5.592	40	5.296	74	5.658
7	5.522	41	5.485	75	5.677	7	5.655	41	5.666	75	5.685
8	5.637	42	5.321	76	5.388	8	5.506	42	5.362	76	5.724
9	5.52	43	5.374	77	5.641	9	5.385	43	5.568	77	5.593
10	5.715	44	5.462	78	5.392	10	5.345	44	5.628	78	5.671
11	5.514	45	5.66	79	5.705	11	5.286	45	5.332	79	5.646
12	5.339	46	5.47	80	5.617	12	5.457	46	5.602	80	5.329
13	5.46	47	5.342	81	5.61	13	5.422	47	5.4	81	5.302
14	5.701	48	5.69	82	5.274	14	5.527	48	5.421	82	5.473
15	5.527	49	5.644	83	5.568	15	5.309	49	5.35	83	5.288
16	5.558	50	5.34	84	5.583	16	5.516	50	5.521	84	5.331
17	5.693	51	5.571	85	5.719	17	5.635	51	5.529	85	5.368
18	5.439	52	5.423	86	5.437	18	5.706	52	5.542	86	5.267
19	5.543	53	5.398	87	5.344	19	5.676	53	5.702	87	5.536
20	5.348	54	5.276	88	5.711	20	5.549	54	5.3	88	5.391
21	5.577	55	5.602	89	5.356	21	5.392	55	5.625	89	5.384
22	5.636	56	5.376	90	5.662	22	5.683	56	5.528	90	5.638
23	5.363	57	5.415	91	5.266	23	5.545	57	5.252	91	5.703
24	5.277	58	5.628	92	5.538	24	5.253	58	5.398	92	5.701
25	5.384	59	5.525	93	5.665	25	5.377	59	5.705	93	5.612
26	5.638	60	5.468	94	5.253	26	5.428	60	5.439	94	5.686
27	5.446	61	5.345	95	5.341	27	5.613	61	5.595	95	5.546
28	5.564	62	5.59	96	5.566	28	5.7	62	5.544	96	5.489
29	5.296	63	5.516	97	5.287	29	5.508	63	5.426	97	5.477
30	5.334	64	5.3	98	5.484	30	5.591	64	5.719	98	5.411
31	5.694	65	5.493	99	5.397	31	5.631	65	5.342	99	5.715
32	5.33	66	5.515	100	5.562	32	5.429	66	5.641	100	5.386
33	5.681	67	5.473			33	5.485	67	5.263		
34	5.412	68	5.648			34	5.465	68	5.503		

NOTE: RED text = frequencies within the channel bandwidth (Fl and Fh).

5260MHZ-20MHZ BW-T6-TRIAL-21						5260MHZ-20MHZ BW-T6-TRIAL-22					
Hop #	Freq. (GHz)	Hop #	Freq. (GHz)	Hop #	Freq. (GHz)	Hop #	Freq. (GHz)	Hop #	Freq. (GHz)	Hop #	Freq. (GHz)
1	5.65	35	5.504	69	5.514	1	5.531	35	5.596	69	5.266
2	5.494	36	5.296	70	5.546	2	5.369	36	5.552	70	5.335
3	5.638	37	5.677	71	5.472	3	5.703	37	5.5	71	5.621
4	5.425	38	5.442	72	5.431	4	5.608	38	5.416	72	5.695
5	5.271	39	5.637	73	5.372	5	5.481	39	5.483	73	5.602
6	5.331	40	5.575	74	5.608	6	5.723	40	5.553	74	5.502
7	5.521	41	5.284	75	5.548	7	5.519	41	5.678	75	5.579
8	5.651	42	5.343	76	5.311	8	5.697	42	5.626	76	5.56
9	5.297	43	5.446	77	5.543	9	5.632	43	5.668	77	5.673
10	5.389	44	5.63	78	5.403	10	5.378	44	5.264	78	5.308
11	5.378	45	5.647	79	5.668	11	5.36	45	5.444	79	5.529
12	5.715	46	5.602	80	5.323	12	5.349	46	5.583	80	5.255
13	5.51	47	5.274	81	5.256	13	5.324	47	5.424	81	5.288
14	5.37	48	5.632	82	5.566	14	5.694	48	5.427	82	5.332
15	5.374	49	5.532	83	5.698	15	5.536	49	5.655	83	5.638
16	5.38	50	5.462	84	5.712	16	5.508	50	5.388	84	5.686
17	5.35	51	5.519	85	5.487	17	5.302	51	5.273	85	5.262
18	5.27	52	5.62	86	5.551	18	5.338	52	5.466	86	5.653
19	5.615	53	5.376	87	5.328	19	5.445	53	5.721	87	5.69
20	5.294	54	5.527	88	5.522	20	5.644	54	5.712	88	5.61
21	5.635	55	5.625	89	5.493	21	5.457	55	5.509	89	5.381
22	5.538	56	5.568	90	5.708	22	5.437	56	5.472	90	5.458
23	5.449	57	5.616	91	5.292	23	5.538	57	5.645	91	5.688
24	5.7	58	5.645	92	5.418	24	5.464	58	5.564	92	5.561
25	5.653	59	5.619	93	5.424	25	5.587	59	5.637	93	5.711
26	5.636	60	5.351	94	5.481	26	5.368	60	5.698	94	5.506
27	5.502	61	5.475	95	5.691	27	5.612	61	5.718	95	5.431
28	5.706	62	5.545	96	5.467	28	5.434	62	5.582	96	5.375
29	5.275	63	5.582	97	5.605	29	5.426	63	5.588	97	5.285
30	5.703	64	5.251	98	5.643	30	5.474	64	5.358	98	5.574
31	5.721	65	5.639	99	5.664	31	5.321	65	5.326	99	5.382
32	5.571	66	5.556	100	5.477	32	5.68	66	5.254	100	5.607
33	5.648	67	5.373			33	5.356	67	5.705		
34	5.517	68	5.724			34	5.533	68	5.418		

NOTE: RED text = frequencies within the channel bandwidth (Fl and Fh).

5260MHZ-20MHZ BW-T6-TRIAL-23						5260MHZ-20MHZ BW-T6-TRIAL-24					
Hop #	Freq. (GHz)	Hop #	Freq. (GHz)	Hop #	Freq. (GHz)	Hop #	Freq. (GHz)	Hop #	Freq. (GHz)	Hop #	Freq. (GHz)
1	5.715	35	5.605	69	5.447	1	5.538	35	5.679	69	5.594
2	5.385	36	5.629	70	5.393	2	5.467	36	5.415	70	5.698
3	5.466	37	5.301	71	5.407	3	5.47	37	5.691	71	5.61
4	5.537	38	5.617	72	5.346	4	5.707	38	5.543	72	5.271
5	5.69	39	5.341	73	5.509	5	5.277	39	5.272	73	5.565
6	5.403	40	5.599	74	5.709	6	5.32	40	5.314	74	5.296
7	5.606	41	5.399	75	5.362	7	5.352	41	5.396	75	5.668
8	5.66	42	5.309	76	5.389	8	5.297	42	5.371	76	5.345
9	5.453	43	5.445	77	5.372	9	5.33	43	5.416	77	5.478
10	5.337	44	5.625	78	5.38	10	5.382	44	5.692	78	5.521
11	5.622	45	5.326	79	5.531	11	5.686	45	5.487	79	5.527
12	5.533	46	5.378	80	5.414	12	5.414	46	5.457	80	5.545
13	5.697	47	5.342	81	5.291	13	5.368	47	5.342	81	5.353
14	5.647	48	5.413	82	5.549	14	5.351	48	5.559	82	5.373
15	5.46	49	5.469	83	5.668	15	5.324	49	5.564	83	5.598
16	5.36	50	5.411	84	5.361	16	5.552	50	5.666	84	5.261
17	5.381	51	5.493	85	5.343	17	5.284	51	5.634	85	5.505
18	5.685	52	5.43	86	5.593	18	5.376	52	5.389	86	5.304
19	5.635	53	5.506	87	5.434	19	5.716	53	5.5	87	5.491
20	5.522	54	5.307	88	5.569	20	5.432	54	5.572	88	5.266
21	5.563	55	5.351	89	5.511	21	5.602	55	5.622	89	5.555
22	5.491	56	5.452	90	5.355	22	5.556	56	5.268	90	5.638
23	5.398	57	5.294	91	5.461	23	5.356	57	5.337	91	5.494
24	5.374	58	5.496	92	5.591	24	5.448	58	5.613	92	5.501
25	5.339	59	5.376	93	5.443	25	5.319	59	5.385	93	5.659
26	5.518	60	5.27	94	5.661	26	5.364	60	5.656	94	5.508
27	5.388	61	5.315	95	5.626	27	5.383	61	5.621	95	5.499
28	5.614	62	5.356	96	5.545	28	5.651	62	5.593	96	5.322
29	5.572	63	5.64	97	5.571	29	5.587	63	5.388	97	5.706
30	5.675	64	5.478	98	5.49	30	5.665	64	5.48	98	5.254
31	5.716	65	5.508	99	5.52	31	5.608	65	5.363	99	5.701
32	5.293	66	5.693	100	5.34	32	5.658	66	5.648	100	5.607
33	5.568	67	5.298			33	5.539	67	5.28		
34	5.499	68	5.713			34	5.259	68	5.35		

NOTE: RED text = frequencies within the channel bandwidth (Fl and Fh).

5260MHZ-20MHZ BW-T6-TRIAL-25						5260MHZ-20MHZ BW-T6-TRIAL-26					
Hop #	Freq. (GHz)	Hop #	Freq. (GHz)	Hop #	Freq. (GHz)	Hop #	Freq. (GHz)	Hop #	Freq. (GHz)	Hop #	Freq. (GHz)
1	5.715	35	5.322	69	5.54	1	5.494	35	5.572	69	5.695
2	5.283	36	5.427	70	5.453	2	5.395	36	5.625	70	5.253
3	5.636	37	5.412	71	5.57	3	5.564	37	5.418	71	5.671
4	5.576	38	5.699	72	5.426	4	5.525	38	5.628	72	5.563
5	5.658	39	5.267	73	5.499	5	5.52	39	5.435	73	5.356
6	5.683	40	5.69	74	5.714	6	5.459	40	5.691	74	5.316
7	5.527	41	5.56	75	5.366	7	5.252	41	5.443	75	5.323
8	5.423	42	5.677	76	5.38	8	5.51	42	5.717	76	5.555
9	5.299	43	5.297	77	5.657	9	5.358	43	5.615	77	5.696
10	5.713	44	5.629	78	5.695	10	5.489	44	5.346	78	5.6
11	5.53	45	5.368	79	5.521	11	5.72	45	5.436	79	5.273
12	5.495	46	5.405	80	5.304	12	5.366	46	5.329	80	5.607
13	5.554	47	5.439	81	5.694	13	5.655	47	5.28	81	5.529
14	5.678	48	5.592	82	5.61	14	5.276	48	5.256	82	5.262
15	5.668	49	5.373	83	5.708	15	5.394	49	5.539	83	5.516
16	5.327	50	5.425	84	5.615	16	5.594	50	5.466	84	5.596
17	5.508	51	5.529	85	5.643	17	5.404	51	5.577	85	5.701
18	5.438	52	5.607	86	5.408	18	5.509	52	5.513	86	5.457
19	5.506	53	5.691	87	5.595	19	5.416	53	5.622	87	5.338
20	5.255	54	5.313	88	5.704	20	5.627	54	5.285	88	5.337
21	5.551	55	5.324	89	5.279	21	5.308	55	5.713	89	5.333
22	5.417	56	5.601	90	5.475	22	5.365	56	5.315	90	5.686
23	5.257	57	5.637	91	5.526	23	5.429	57	5.64	91	5.269
24	5.477	58	5.673	92	5.613	24	5.613	58	5.501	92	5.688
25	5.326	59	5.337	93	5.52	25	5.538	59	5.264	93	5.566
26	5.624	60	5.709	94	5.266	26	5.612	60	5.415	94	5.477
27	5.421	61	5.319	95	5.303	27	5.56	61	5.287	95	5.266
28	5.252	62	5.566	96	5.552	28	5.486	62	5.347	96	5.33
29	5.681	63	5.679	97	5.721	29	5.648	63	5.55	97	5.521
30	5.32	64	5.321	98	5.348	30	5.267	64	5.557	98	5.424
31	5.58	65	5.66	99	5.496	31	5.331	65	5.261	99	5.576
32	5.484	66	5.452	100	5.413	32	5.604	66	5.379	100	5.586
33	5.676	67	5.471			33	5.558	67	5.335		
34	5.628	68	5.415			34	5.718	68	5.635		

NOTE: RED text = frequencies within the channel bandwidth (Fl and Fh).

5260MHZ-20MHZ BW-T6-TRIAL-27						5260MHZ-20MHZ BW-T6-TRIAL-28					
Hop #	Freq. (GHz)	Hop #	Freq. (GHz)	Hop #	Freq. (GHz)	Hop #	Freq. (GHz)	Hop #	Freq. (GHz)	Hop #	Freq. (GHz)
1	5.274	35	5.619	69	5.296	1	5.453	35	5.696	69	5.307
2	5.723	36	5.576	70	5.586	2	5.501	36	5.283	70	5.638
3	5.299	37	5.574	71	5.442	3	5.598	37	5.713	71	5.636
4	5.664	38	5.393	72	5.485	4	5.688	38	5.66	72	5.686
5	5.67	39	5.575	73	5.348	5	5.263	39	5.389	73	5.254
6	5.275	40	5.337	74	5.568	6	5.694	40	5.69	74	5.273
7	5.483	41	5.44	75	5.314	7	5.675	41	5.407	75	5.555
8	5.674	42	5.537	76	5.464	8	5.291	42	5.48	76	5.562
9	5.616	43	5.625	77	5.463	9	5.424	43	5.327	77	5.279
10	5.612	44	5.347	78	5.66	10	5.335	44	5.353	78	5.361
11	5.292	45	5.474	79	5.633	11	5.614	45	5.623	79	5.603
12	5.266	46	5.64	80	5.597	12	5.275	46	5.583	80	5.624
13	5.667	47	5.374	81	5.386	13	5.447	47	5.573	81	5.303
14	5.548	48	5.681	82	5.617	14	5.348	48	5.315	82	5.571
15	5.611	49	5.65	83	5.415	15	5.475	49	5.314	83	5.481
16	5.29	50	5.561	84	5.683	16	5.491	50	5.341	84	5.421
17	5.686	51	5.666	85	5.349	17	5.531	51	5.489	85	5.643
18	5.48	52	5.313	86	5.444	18	5.376	52	5.703	86	5.565
19	5.361	53	5.541	87	5.702	19	5.644	53	5.281	87	5.502
20	5.663	54	5.43	88	5.573	20	5.515	54	5.318	88	5.541
21	5.71	55	5.295	89	5.594	21	5.444	55	5.602	89	5.684
22	5.631	56	5.675	90	5.604	22	5.334	56	5.267	90	5.534
23	5.57	57	5.319	91	5.636	23	5.441	57	5.395	91	5.645
24	5.423	58	5.456	92	5.273	24	5.622	58	5.425	92	5.626
25	5.523	59	5.376	93	5.582	25	5.724	59	5.392	93	5.629
26	5.538	60	5.696	94	5.706	26	5.432	60	5.613	94	5.697
27	5.306	61	5.421	95	5.439	27	5.588	61	5.647	95	5.585
28	5.343	62	5.269	96	5.638	28	5.556	62	5.62	96	5.662
29	5.715	63	5.289	97	5.493	29	5.38	63	5.58	97	5.438
30	5.539	64	5.453	98	5.649	30	5.363	64	5.637	98	5.266
31	5.287	65	5.401	99	5.317	31	5.717	65	5.716	99	5.288
32	5.608	66	5.363	100	5.567	32	5.468	66	5.677	100	5.465
33	5.699	67	5.668			33	5.289	67	5.627		
34	5.466	68	5.375			34	5.567	68	5.401		

NOTE: RED text = frequencies within the channel bandwidth (Fl and Fh).

5260MHZ-20MHZ BW-T6-TRIAL-29						5260MHZ-20MHZ BW-T6-TRIAL-30					
Hop #	Freq. (GHz)	Hop #	Freq. (GHz)	Hop #	Freq. (GHz)	Hop #	Freq. (GHz)	Hop #	Freq. (GHz)	Hop #	Freq. (GHz)
1	5.65	35	5.329	69	5.348	1	5.43	35	5.719	69	5.326
2	5.296	36	5.513	70	5.714	2	5.272	36	5.3	70	5.521
3	5.488	37	5.548	71	5.317	3	5.7	37	5.431	71	5.506
4	5.365	38	5.303	72	5.66	4	5.396	38	5.639	72	5.723
5	5.676	39	5.683	73	5.687	5	5.712	39	5.377	73	5.269
6	5.604	40	5.632	74	5.681	6	5.442	40	5.507	74	5.402
7	5.511	41	5.55	75	5.576	7	5.516	41	5.685	75	5.722
8	5.326	42	5.647	76	5.516	8	5.289	42	5.291	76	5.365
9	5.573	43	5.467	77	5.457	9	5.376	43	5.485	77	5.383
10	5.487	44	5.394	78	5.325	10	5.687	44	5.26	78	5.447
11	5.531	45	5.515	79	5.525	11	5.535	45	5.354	79	5.486
12	5.375	46	5.696	80	5.42	12	5.411	46	5.251	80	5.63
13	5.261	47	5.407	81	5.529	13	5.72	47	5.638	81	5.292
14	5.652	48	5.523	82	5.717	14	5.653	48	5.662	82	5.312
15	5.363	49	5.633	83	5.645	15	5.319	49	5.681	83	5.295
16	5.555	50	5.565	84	5.6	16	5.316	50	5.328	84	5.457
17	5.675	51	5.421	85	5.384	17	5.38	51	5.429	85	5.273
18	5.269	52	5.333	86	5.606	18	5.589	52	5.545	86	5.478
19	5.589	53	5.545	87	5.444	19	5.672	53	5.684	87	5.648
20	5.44	54	5.358	88	5.37	20	5.375	54	5.704	88	5.293
21	5.374	55	5.482	89	5.281	21	5.323	55	5.664	89	5.599
22	5.313	56	5.658	90	5.635	22	5.716	56	5.676	90	5.336
23	5.549	57	5.497	91	5.663	23	5.287	57	5.488	91	5.626
24	5.362	58	5.672	92	5.519	24	5.253	58	5.637	92	5.718
25	5.618	59	5.287	93	5.627	25	5.691	59	5.622	93	5.475
26	5.528	60	5.435	94	5.691	26	5.618	60	5.455	94	5.544
27	5.336	61	5.343	95	5.57	27	5.519	61	5.473	95	5.694
28	5.283	62	5.71	96	5.554	28	5.579	62	5.549	96	5.35
29	5.35	63	5.638	97	5.654	29	5.558	63	5.322	97	5.302
30	5.45	64	5.593	98	5.443	30	5.668	64	5.281	98	5.484
31	5.277	65	5.275	99	5.29	31	5.65	65	5.374	99	5.645
32	5.368	66	5.432	100	5.533	32	5.705	66	5.512	100	5.255
33	5.264	67	5.439			33	5.56	67	5.444		
34	5.723	68	5.477			34	5.356	68	5.69		

NOTE: RED text = frequencies within the channel bandwidth (Fl and Fh).

A.5 Radar Type 6 Parameters for 40 MHz Bandwidth

5270MHZ-40MHZ BW-T6-TRIAL-1						5270MHZ-40MHZ BW-T6-TRIAL-2					
Hop #	Freq. (GHz)	Hop #	Freq. (GHz)	Hop #	Freq. (GHz)	Hop #	Freq. (GHz)	Hop #	Freq. (GHz)	Hop #	Freq. (GHz)
1	5.376	35	5.418	69	5.552	1	5.527	35	5.704	69	5.251
2	5.67	36	5.373	70	5.359	2	5.304	36	5.382	70	5.491
3	5.703	37	5.468	71	5.555	3	5.709	37	5.385	71	5.69
4	5.427	38	5.559	72	5.409	4	5.663	38	5.285	72	5.408
5	5.342	39	5.476	73	5.464	5	5.373	39	5.452	73	5.52
6	5.451	40	5.404	74	5.26	6	5.306	40	5.449	74	5.529
7	5.395	41	5.625	75	5.604	7	5.39	41	5.379	75	5.597
8	5.285	42	5.643	76	5.644	8	5.689	42	5.439	76	5.338
9	5.448	43	5.621	77	5.414	9	5.625	43	5.662	77	5.595
10	5.534	44	5.68	78	5.543	10	5.266	44	5.41	78	5.264
11	5.691	45	5.562	79	5.617	11	5.447	45	5.593	79	5.492
12	5.39	46	5.665	80	5.605	12	5.35	46	5.654	80	5.277
13	5.437	47	5.588	81	5.279	13	5.517	47	5.288	81	5.499
14	5.442	48	5.413	82	5.34	14	5.388	48	5.605	82	5.505
15	5.443	49	5.651	83	5.499	15	5.664	49	5.335	83	5.582
16	5.519	50	5.311	84	5.44	16	5.607	50	5.51	84	5.537
17	5.434	51	5.622	85	5.595	17	5.372	51	5.483	85	5.646
18	5.256	52	5.589	86	5.675	18	5.406	52	5.699	86	5.644
19	5.307	53	5.288	87	5.348	19	5.415	53	5.58	87	5.62
20	5.62	54	5.435	88	5.577	20	5.36	54	5.697	88	5.348
21	5.336	55	5.257	89	5.694	21	5.639	55	5.471	89	5.425
22	5.58	56	5.632	90	5.528	22	5.434	56	5.381	90	5.61
23	5.463	57	5.339	91	5.578	23	5.342	57	5.533	91	5.596
24	5.416	58	5.637	92	5.612	24	5.291	58	5.681	92	5.431
25	5.642	59	5.674	93	5.671	25	5.516	59	5.274	93	5.289
26	5.515	60	5.526	94	5.483	26	5.604	60	5.641	94	5.629
27	5.501	61	5.428	95	5.349	27	5.673	61	5.396	95	5.609
28	5.32	62	5.65	96	5.518	28	5.501	62	5.296	96	5.478
29	5.668	63	5.266	97	5.322	29	5.497	63	5.665	97	5.696
30	5.627	64	5.415	98	5.716	30	5.613	64	5.363	98	5.484
31	5.274	65	5.302	99	5.484	31	5.672	65	5.366	99	5.334
32	5.533	66	5.54	100	5.702	32	5.606	66	5.679	100	5.269
33	5.297	67	5.55			33	5.328	67	5.299		
34	5.575	68	5.402			34	5.293	68	5.693		

NOTE: RED text = frequencies within the channel bandwidth (Fl and Fh).

5270MHZ-40MHZ BW-T6-TRIAL-3						5270MHZ-40MHZ BW-T6-TRIAL-4					
Hop #	Freq. (GHz)	Hop #	Freq. (GHz)	Hop #	Freq. (GHz)	Hop #	Freq. (GHz)	Hop #	Freq. (GHz)	Hop #	Freq. (GHz)
1	5.255	35	5.466	69	5.294	1	5.465	35	5.264	69	5.568
2	5.393	36	5.618	70	5.661	2	5.681	36	5.396	70	5.716
3	5.263	37	5.624	71	5.422	3	5.416	37	5.554	71	5.657
4	5.459	38	5.274	72	5.55	4	5.512	38	5.584	72	5.62
5	5.552	39	5.593	73	5.345	5	5.569	39	5.494	73	5.399
6	5.682	40	5.312	74	5.26	6	5.449	40	5.46	74	5.7
7	5.411	41	5.296	75	5.327	7	5.496	41	5.36	75	5.382
8	5.613	42	5.451	76	5.513	8	5.461	42	5.654	76	5.276
9	5.268	43	5.468	77	5.664	9	5.319	43	5.625	77	5.389
10	5.555	44	5.34	78	5.496	10	5.693	44	5.616	78	5.624
11	5.25	45	5.686	79	5.692	11	5.503	45	5.392	79	5.428
12	5.609	46	5.326	80	5.521	12	5.386	46	5.542	80	5.597
13	5.532	47	5.499	81	5.598	13	5.522	47	5.521	81	5.504
14	5.687	48	5.587	82	5.534	14	5.309	48	5.412	82	5.347
15	5.403	49	5.551	83	5.645	15	5.262	49	5.54	83	5.352
16	5.677	50	5.388	84	5.717	16	5.317	50	5.651	84	5.353
17	5.386	51	5.335	85	5.449	17	5.256	51	5.288	85	5.545
18	5.368	52	5.655	86	5.377	18	5.431	52	5.481	86	5.668
19	5.407	53	5.599	87	5.467	19	5.34	53	5.656	87	5.41
20	5.546	54	5.381	88	5.301	20	5.691	54	5.505	88	5.252
21	5.671	55	5.262	89	5.295	21	5.298	55	5.719	89	5.419
22	5.315	56	5.588	90	5.251	22	5.291	56	5.491	90	5.575
23	5.614	57	5.443	91	5.579	23	5.418	57	5.4	91	5.539
24	5.694	58	5.562	92	5.659	24	5.365	58	5.363	92	5.455
25	5.667	59	5.509	93	5.356	25	5.374	59	5.322	93	5.605
26	5.42	60	5.567	94	5.721	26	5.509	60	5.269	94	5.388
27	5.484	61	5.606	95	5.629	27	5.622	61	5.42	95	5.582
28	5.334	62	5.603	96	5.581	28	5.587	62	5.313	96	5.634
29	5.635	63	5.473	97	5.569	29	5.536	63	5.292	97	5.492
30	5.709	64	5.695	98	5.498	30	5.43	64	5.484	98	5.391
31	5.699	65	5.704	99	5.252	31	5.318	65	5.71	99	5.279
32	5.264	66	5.352	100	5.482	32	5.272	66	5.354	100	5.615
33	5.712	67	5.256			33	5.307	67	5.708		
34	5.577	68	5.399			34	5.487	68	5.524		

NOTE: RED text = frequencies within the channel bandwidth (Fl and Fh).

5270MHZ-40MHZ BW-T6-TRIAL-5						5270MHZ-40MHZ BW-T6-TRIAL-6					
Hop #	Freq. (GHz)	Hop #	Freq. (GHz)	Hop #	Freq. (GHz)	Hop #	Freq. (GHz)	Hop #	Freq. (GHz)	Hop #	Freq. (GHz)
1	5.715	35	5.649	69	5.307	1	5.573	35	5.504	69	5.61
2	5.283	36	5.384	70	5.665	2	5.374	36	5.675	70	5.714
3	5.393	37	5.436	71	5.423	3	5.718	37	5.494	71	5.433
4	5.501	38	5.587	72	5.707	4	5.337	38	5.533	72	5.562
5	5.595	39	5.482	73	5.359	5	5.496	39	5.415	73	5.373
6	5.592	40	5.338	74	5.41	6	5.683	40	5.252	74	5.443
7	5.545	41	5.27	75	5.706	7	5.668	41	5.265	75	5.641
8	5.399	42	5.288	76	5.29	8	5.609	42	5.713	76	5.382
9	5.375	43	5.301	77	5.664	9	5.372	43	5.301	77	5.557
10	5.514	44	5.259	78	5.43	10	5.253	44	5.491	78	5.28
11	5.266	45	5.271	79	5.683	11	5.648	45	5.453	79	5.478
12	5.354	46	5.575	80	5.355	12	5.543	46	5.339	80	5.62
13	5.335	47	5.567	81	5.563	13	5.629	47	5.294	81	5.509
14	5.561	48	5.542	82	5.308	14	5.303	48	5.518	82	5.489
15	5.468	49	5.292	83	5.601	15	5.586	49	5.702	83	5.273
16	5.26	50	5.626	84	5.449	16	5.515	50	5.715	84	5.606
17	5.616	51	5.325	85	5.476	17	5.438	51	5.379	85	5.464
18	5.565	52	5.61	86	5.44	18	5.297	52	5.696	86	5.42
19	5.383	53	5.255	87	5.6	19	5.693	53	5.655	87	5.36
20	5.323	54	5.371	88	5.446	20	5.684	54	5.691	88	5.647
21	5.615	55	5.419	89	5.327	21	5.656	55	5.597	89	5.548
22	5.312	56	5.488	90	5.262	22	5.258	56	5.302	90	5.592
23	5.562	57	5.709	91	5.387	23	5.523	57	5.614	91	5.646
24	5.257	58	5.469	92	5.646	24	5.313	58	5.39	92	5.329
25	5.32	59	5.318	93	5.358	25	5.399	59	5.572	93	5.366
26	5.381	60	5.623	94	5.35	26	5.661	60	5.345	94	5.72
27	5.65	61	5.372	95	5.611	27	5.429	61	5.261	95	5.71
28	5.37	62	5.363	96	5.397	28	5.685	62	5.449	96	5.359
29	5.402	63	5.588	97	5.573	29	5.67	63	5.367	97	5.561
30	5.31	64	5.473	98	5.628	30	5.6	64	5.432	98	5.699
31	5.409	65	5.577	99	5.452	31	5.309	65	5.598	99	5.716
32	5.534	66	5.54	100	5.282	32	5.304	66	5.594	100	5.512
33	5.516	67	5.72			33	5.492	67	5.686		
34	5.337	68	5.49			34	5.551	68	5.517		

NOTE: RED text = frequencies within the channel bandwidth (Fl and Fh).

5270MHZ-40MHZ BW-T6-TRIAL-7						5270MHZ-40MHZ BW-T6-TRIAL-8					
Hop #	Freq. (GHz)	Hop #	Freq. (GHz)	Hop #	Freq. (GHz)	Hop #	Freq. (GHz)	Hop #	Freq. (GHz)	Hop #	Freq. (GHz)
1	5.446	35	5.591	69	5.296	1	5.316	35	5.603	69	5.458
2	5.382	36	5.665	70	5.723	2	5.626	36	5.417	70	5.308
3	5.496	37	5.592	71	5.269	3	5.255	37	5.638	71	5.664
4	5.666	38	5.495	72	5.339	4	5.583	38	5.336	72	5.517
5	5.59	39	5.345	73	5.406	5	5.585	39	5.654	73	5.396
6	5.69	40	5.282	74	5.52	6	5.313	40	5.337	74	5.528
7	5.555	41	5.558	75	5.509	7	5.578	41	5.425	75	5.288
8	5.316	42	5.501	76	5.526	8	5.651	42	5.367	76	5.253
9	5.643	43	5.658	77	5.415	9	5.402	43	5.335	77	5.582
10	5.283	44	5.326	78	5.599	10	5.418	44	5.463	78	5.431
11	5.298	45	5.272	79	5.652	11	5.263	45	5.354	79	5.624
12	5.673	46	5.47	80	5.267	12	5.467	46	5.568	80	5.661
13	5.259	47	5.645	81	5.426	13	5.312	47	5.301	81	5.688
14	5.674	48	5.309	82	5.313	14	5.692	48	5.366	82	5.33
15	5.641	49	5.375	83	5.581	15	5.378	49	5.671	83	5.507
16	5.281	50	5.609	84	5.627	16	5.684	50	5.557	84	5.527
17	5.441	51	5.346	85	5.36	17	5.383	51	5.689	85	5.551
18	5.481	52	5.31	86	5.258	18	5.456	52	5.561	86	5.627
19	5.294	53	5.548	87	5.582	19	5.474	53	5.521	87	5.71
20	5.353	54	5.376	88	5.628	20	5.375	54	5.643	88	5.546
21	5.286	55	5.625	89	5.428	21	5.544	55	5.687	89	5.358
22	5.4	56	5.639	90	5.392	22	5.489	56	5.437	90	5.719
23	5.394	57	5.61	91	5.679	23	5.491	57	5.608	91	5.695
24	5.532	58	5.676	92	5.576	24	5.422	58	5.618	92	5.38
25	5.62	59	5.385	93	5.695	25	5.323	59	5.704	93	5.57
26	5.37	60	5.686	94	5.456	26	5.708	60	5.443	94	5.478
27	5.476	61	5.383	95	5.504	27	5.276	61	5.473	95	5.384
28	5.373	62	5.572	96	5.603	28	5.72	62	5.609	96	5.653
29	5.705	63	5.462	97	5.544	29	5.275	63	5.548	97	5.382
30	5.25	64	5.537	98	5.44	30	5.54	64	5.707	98	5.318
31	5.534	65	5.324	99	5.461	31	5.462	65	5.584	99	5.369
32	5.55	66	5.512	100	5.49	32	5.514	66	5.439	100	5.715
33	5.493	67	5.506			33	5.329	67	5.355		
34	5.656	68	5.422			34	5.48	68	5.621		

NOTE: RED text = frequencies within the channel bandwidth (Fl and Fh).

5270MHZ-40MHZ BW-T6-TRIAL-9						5270MHZ-40MHZ BW-T6-TRIAL-10					
Hop #	Freq. (GHz)	Hop #	Freq. (GHz)	Hop #	Freq. (GHz)	Hop #	Freq. (GHz)	Hop #	Freq. (GHz)	Hop #	Freq. (GHz)
1	5.669	35	5.37	69	5.336	1	5.441	35	5.472	69	5.35
2	5.704	36	5.572	70	5.289	2	5.527	36	5.419	70	5.667
3	5.301	37	5.592	71	5.288	3	5.344	37	5.334	71	5.666
4	5.651	38	5.348	72	5.333	4	5.482	38	5.674	72	5.697
5	5.614	39	5.445	73	5.326	5	5.585	39	5.318	73	5.521
6	5.377	40	5.32	74	5.25	6	5.656	40	5.551	74	5.275
7	5.547	41	5.692	75	5.264	7	5.692	41	5.458	75	5.307
8	5.304	42	5.391	76	5.491	8	5.663	42	5.34	76	5.575
9	5.632	43	5.439	77	5.467	9	5.576	43	5.647	77	5.29
10	5.629	44	5.625	78	5.267	10	5.682	44	5.403	78	5.346
11	5.584	45	5.429	79	5.254	11	5.649	45	5.62	79	5.428
12	5.606	46	5.589	80	5.586	12	5.31	46	5.439	80	5.415
13	5.453	47	5.404	81	5.284	13	5.509	47	5.399	81	5.52
14	5.599	48	5.305	82	5.369	14	5.716	48	5.662	82	5.573
15	5.573	49	5.508	83	5.555	15	5.535	49	5.3	83	5.468
16	5.712	50	5.338	84	5.544	16	5.476	50	5.642	84	5.606
17	5.302	51	5.679	85	5.347	17	5.301	51	5.541	85	5.673
18	5.714	52	5.684	86	5.563	18	5.259	52	5.607	86	5.553
19	5.559	53	5.283	87	5.576	19	5.57	53	5.256	87	5.626
20	5.463	54	5.485	88	5.381	20	5.422	54	5.432	88	5.473
21	5.583	55	5.475	89	5.653	21	5.533	55	5.567	89	5.496
22	5.527	56	5.332	90	5.543	22	5.454	56	5.722	90	5.373
23	5.69	57	5.438	91	5.462	23	5.316	57	5.529	91	5.48
24	5.658	58	5.309	92	5.335	24	5.456	58	5.677	92	5.504
25	5.287	59	5.663	93	5.366	25	5.712	59	5.298	93	5.704
26	5.717	60	5.344	94	5.608	26	5.506	60	5.694	94	5.32
27	5.671	61	5.645	95	5.331	27	5.588	61	5.665	95	5.265
28	5.601	62	5.574	96	5.483	28	5.631	62	5.424	96	5.274
29	5.531	63	5.526	97	5.35	29	5.625	63	5.723	97	5.321
30	5.698	64	5.441	98	5.595	30	5.383	64	5.554	98	5.257
31	5.678	65	5.545	99	5.676	31	5.285	65	5.453	99	5.633
32	5.487	66	5.371	100	5.587	32	5.45	66	5.624	100	5.66
33	5.598	67	5.644			33	5.517	67	5.267		
34	5.397	68	5.596			34	5.41	68	5.326		

NOTE: RED text = frequencies within the channel bandwidth (Fl and Fh).

5270MHZ-40MHZ BW-T6-TRIAL-11						5270MHZ-40MHZ BW-T6-TRIAL-12					
Hop #	Freq. (GHz)	Hop #	Freq. (GHz)	Hop #	Freq. (GHz)	Hop #	Freq. (GHz)	Hop #	Freq. (GHz)	Hop #	Freq. (GHz)
1	5.515	35	5.656	69	5.541	1	5.428	35	5.412	69	5.262
2	5.499	36	5.276	70	5.294	2	5.672	36	5.639	70	5.317
3	5.45	37	5.598	71	5.434	3	5.405	37	5.382	71	5.468
4	5.528	38	5.556	72	5.273	4	5.321	38	5.538	72	5.48
5	5.48	39	5.625	73	5.349	5	5.415	39	5.29	73	5.365
6	5.566	40	5.419	74	5.486	6	5.258	40	5.609	74	5.252
7	5.569	41	5.323	75	5.459	7	5.461	41	5.71	75	5.632
8	5.654	42	5.595	76	5.694	8	5.35	42	5.253	76	5.603
9	5.342	43	5.326	77	5.608	9	5.486	43	5.356	77	5.463
10	5.35	44	5.456	78	5.591	10	5.57	44	5.25	78	5.694
11	5.415	45	5.513	79	5.543	11	5.675	45	5.622	79	5.526
12	5.256	46	5.685	80	5.539	12	5.645	46	5.61	80	5.667
13	5.547	47	5.381	81	5.449	13	5.391	47	5.661	81	5.423
14	5.62	48	5.325	82	5.408	14	5.259	48	5.484	82	5.314
15	5.596	49	5.331	83	5.619	15	5.723	49	5.641	83	5.286
16	5.439	50	5.562	84	5.313	16	5.466	50	5.564	84	5.519
17	5.594	51	5.496	85	5.617	17	5.522	51	5.635	85	5.398
18	5.352	52	5.644	86	5.514	18	5.306	52	5.644	86	5.407
19	5.638	53	5.32	87	5.387	19	5.585	53	5.671	87	5.676
20	5.462	54	5.581	88	5.564	20	5.389	54	5.514	88	5.294
21	5.677	55	5.563	89	5.643	21	5.309	55	5.289	89	5.338
22	5.455	56	5.443	90	5.714	22	5.67	56	5.299	90	5.557
23	5.552	57	5.442	91	5.634	23	5.588	57	5.335	91	5.571
24	5.414	58	5.288	92	5.285	24	5.346	58	5.5	92	5.373
25	5.277	59	5.306	93	5.437	25	5.341	59	5.504	93	5.501
26	5.583	60	5.478	94	5.56	26	5.654	60	5.658	94	5.404
27	5.382	61	5.362	95	5.304	27	5.699	61	5.378	95	5.443
28	5.345	62	5.3	96	5.491	28	5.507	62	5.581	96	5.285
29	5.332	63	5.702	97	5.497	29	5.408	63	5.349	97	5.307
30	5.303	64	5.422	98	5.637	30	5.572	64	5.604	98	5.593
31	5.372	65	5.457	99	5.444	31	5.478	65	5.455	99	5.663
32	5.418	66	5.411	100	5.561	32	5.418	66	5.457	100	5.474
33	5.665	67	5.267			33	5.445	67	5.425		
34	5.54	68	5.254			34	5.707	68	5.368		

NOTE: RED text = frequencies within the channel bandwidth (Fl and Fh).

5270MHZ-40MHZ BW-T6-TRIAL-13						5270MHZ-40MHZ BW-T6-TRIAL-14					
Hop #	Freq. (GHz)	Hop #	Freq. (GHz)	Hop #	Freq. (GHz)	Hop #	Freq. (GHz)	Hop #	Freq. (GHz)	Hop #	Freq. (GHz)
1	5.265	35	5.668	69	5.626	1	5.445	35	5.511	69	5.527
2	5.52	36	5.323	70	5.71	2	5.472	36	5.452	70	5.662
3	5.57	37	5.293	71	5.596	3	5.701	37	5.529	71	5.411
4	5.443	38	5.586	72	5.277	4	5.289	38	5.465	72	5.377
5	5.315	39	5.528	73	5.428	5	5.44	39	5.307	73	5.3
6	5.401	40	5.498	74	5.709	6	5.491	40	5.454	74	5.483
7	5.521	41	5.666	75	5.342	7	5.381	41	5.638	75	5.596
8	5.429	42	5.427	76	5.38	8	5.705	42	5.694	76	5.296
9	5.619	43	5.458	77	5.504	9	5.601	43	5.278	77	5.586
10	5.534	44	5.437	78	5.639	10	5.256	44	5.639	78	5.602
11	5.317	45	5.445	79	5.312	11	5.565	45	5.543	79	5.448
12	5.444	46	5.553	80	5.618	12	5.555	46	5.647	80	5.396
13	5.423	47	5.257	81	5.526	13	5.703	47	5.371	81	5.252
14	5.64	48	5.655	82	5.267	14	5.562	48	5.542	82	5.285
15	5.45	49	5.524	83	5.358	15	5.459	49	5.523	83	5.372
16	5.6	50	5.416	84	5.499	16	5.524	50	5.578	84	5.719
17	5.607	51	5.66	85	5.63	17	5.379	51	5.721	85	5.698
18	5.557	52	5.41	86	5.376	18	5.357	52	5.456	86	5.342
19	5.583	53	5.55	87	5.392	19	5.612	53	5.661	87	5.26
20	5.61	54	5.585	88	5.712	20	5.657	54	5.676	88	5.541
21	5.34	55	5.284	89	5.367	21	5.553	55	5.528	89	5.297
22	5.657	56	5.545	90	5.634	22	5.53	56	5.493	90	5.408
23	5.633	57	5.694	91	5.486	23	5.675	57	5.313	91	5.434
24	5.5	58	5.253	92	5.297	24	5.6	58	5.627	92	5.362
25	5.638	59	5.379	93	5.665	25	5.286	59	5.604	93	5.374
26	5.322	60	5.424	94	5.439	26	5.463	60	5.305	94	5.486
27	5.325	61	5.637	95	5.625	27	5.71	61	5.685	95	5.611
28	5.492	62	5.654	96	5.307	28	5.422	62	5.692	96	5.272
29	5.517	63	5.332	97	5.252	29	5.643	63	5.303	97	5.62
30	5.487	64	5.644	98	5.262	30	5.389	64	5.255	98	5.406
31	5.529	65	5.472	99	5.46	31	5.47	65	5.433	99	5.257
32	5.695	66	5.68	100	5.616	32	5.671	66	5.407	100	5.405
33	5.48	67	5.28			33	5.394	67	5.589		
34	5.37	68	5.381			34	5.449	68	5.263		

NOTE: RED text = frequencies within the channel bandwidth (Fl and Fh).

5270MHZ-40MHZ BW-T6-TRIAL-15						5270MHZ-40MHZ BW-T6-TRIAL-16					
Hop #	Freq. (GHz)	Hop #	Freq. (GHz)	Hop #	Freq. (GHz)	Hop #	Freq. (GHz)	Hop #	Freq. (GHz)	Hop #	Freq. (GHz)
1	5.549	35	5.575	69	5.48	1	5.336	35	5.311	69	5.25
2	5.654	36	5.694	70	5.506	2	5.273	36	5.622	70	5.538
3	5.393	37	5.45	71	5.604	3	5.511	37	5.575	71	5.323
4	5.296	38	5.274	72	5.592	4	5.555	38	5.428	72	5.618
5	5.644	39	5.403	73	5.324	5	5.409	39	5.464	73	5.537
6	5.276	40	5.723	74	5.722	6	5.487	40	5.442	74	5.32
7	5.413	41	5.566	75	5.417	7	5.452	41	5.451	75	5.267
8	5.671	42	5.68	76	5.638	8	5.527	42	5.374	76	5.287
9	5.602	43	5.355	77	5.631	9	5.548	43	5.706	77	5.438
10	5.627	44	5.49	78	5.632	10	5.625	44	5.542	78	5.344
11	5.381	45	5.688	79	5.301	11	5.258	45	5.561	79	5.332
12	5.519	46	5.69	80	5.486	12	5.384	46	5.385	80	5.545
13	5.536	47	5.598	81	5.38	13	5.462	47	5.264	81	5.643
14	5.595	48	5.684	82	5.621	14	5.327	48	5.448	82	5.401
15	5.307	49	5.411	83	5.533	15	5.56	49	5.261	83	5.366
16	5.515	50	5.32	84	5.583	16	5.632	50	5.301	84	5.634
17	5.262	51	5.294	85	5.517	17	5.518	51	5.357	85	5.424
18	5.39	52	5.7	86	5.505	18	5.549	52	5.299	86	5.455
19	5.653	53	5.508	87	5.269	19	5.338	53	5.268	87	5.576
20	5.298	54	5.538	88	5.636	20	5.343	54	5.274	88	5.375
21	5.446	55	5.279	89	5.422	21	5.468	55	5.515	89	5.574
22	5.649	56	5.28	90	5.303	22	5.597	56	5.416	90	5.711
23	5.282	57	5.374	91	5.524	23	5.717	57	5.45	91	5.562
24	5.714	58	5.597	92	5.677	24	5.723	58	5.543	92	5.69
25	5.334	59	5.572	93	5.332	25	5.372	59	5.684	93	5.491
26	5.35	60	5.395	94	5.601	26	5.48	60	5.419	94	5.594
27	5.672	61	5.386	95	5.305	27	5.672	61	5.558	95	5.289
28	5.29	62	5.705	96	5.552	28	5.525	62	5.288	96	5.556
29	5.259	63	5.466	97	5.402	29	5.257	63	5.596	97	5.668
30	5.495	64	5.387	98	5.501	30	5.508	64	5.722	98	5.447
31	5.72	65	5.622	99	5.433	31	5.427	65	5.461	99	5.334
32	5.288	66	5.603	100	5.706	32	5.397	66	5.4	100	5.704
33	5.569	67	5.57			33	5.703	67	5.433		
34	5.316	68	5.518			34	5.591	68	5.28		

NOTE: RED text = frequencies within the channel bandwidth (Fl and Fh).

5270MHZ-40MHZ BW-T6-TRIAL-17						5270MHZ-40MHZ BW-T6-TRIAL-18					
Hop #	Freq. (GHz)	Hop #	Freq. (GHz)	Hop #	Freq. (GHz)	Hop #	Freq. (GHz)	Hop #	Freq. (GHz)	Hop #	Freq. (GHz)
1	5.637	35	5.42	69	5.595	1	5.267	35	5.661	69	5.691
2	5.509	36	5.313	70	5.28	2	5.514	36	5.537	70	5.509
3	5.334	37	5.55	71	5.469	3	5.334	37	5.575	71	5.628
4	5.267	38	5.592	72	5.378	4	5.445	38	5.676	72	5.52
5	5.599	39	5.622	73	5.432	5	5.603	39	5.502	73	5.508
6	5.533	40	5.26	74	5.305	6	5.286	40	5.533	74	5.48
7	5.354	41	5.398	75	5.289	7	5.331	41	5.262	75	5.333
8	5.517	42	5.492	76	5.458	8	5.723	42	5.406	76	5.527
9	5.661	43	5.649	77	5.697	9	5.707	43	5.582	77	5.536
10	5.361	44	5.589	78	5.497	10	5.7	44	5.704	78	5.626
11	5.438	45	5.572	79	5.473	11	5.454	45	5.588	79	5.656
12	5.657	46	5.669	80	5.676	12	5.431	46	5.33	80	5.684
13	5.29	47	5.57	81	5.505	13	5.426	47	5.572	81	5.257
14	5.67	48	5.54	82	5.328	14	5.666	48	5.451	82	5.565
15	5.269	49	5.604	83	5.63	15	5.468	49	5.6	83	5.615
16	5.695	50	5.694	84	5.518	16	5.505	50	5.612	84	5.281
17	5.655	51	5.408	85	5.607	17	5.623	51	5.515	85	5.42
18	5.298	52	5.485	86	5.503	18	5.703	52	5.364	86	5.428
19	5.41	53	5.395	87	5.444	19	5.673	53	5.34	87	5.371
20	5.677	54	5.493	88	5.372	20	5.638	54	5.432	88	5.256
21	5.628	55	5.294	89	5.333	21	5.619	55	5.4	89	5.377
22	5.682	56	5.487	90	5.339	22	5.277	56	5.535	90	5.456
23	5.552	57	5.617	91	5.671	23	5.605	57	5.413	91	5.539
24	5.394	58	5.646	92	5.712	24	5.293	58	5.66	92	5.443
25	5.53	59	5.548	93	5.644	25	5.441	59	5.601	93	5.435
26	5.506	60	5.501	94	5.425	26	5.297	60	5.337	94	5.634
27	5.252	61	5.468	95	5.356	27	5.532	61	5.374	95	5.285
28	5.564	62	5.583	96	5.416	28	5.576	62	5.679	96	5.694
29	5.543	63	5.576	97	5.433	29	5.472	63	5.475	97	5.345
30	5.363	64	5.612	98	5.495	30	5.494	64	5.587	98	5.299
31	5.692	65	5.299	99	5.459	31	5.616	65	5.552	99	5.45
32	5.521	66	5.706	100	5.72	32	5.604	66	5.512	100	5.486
33	5.546	67	5.634			33	5.447	67	5.541		
34	5.471	68	5.382			34	5.415	68	5.252		

NOTE: RED text = frequencies within the channel bandwidth (Fl and Fh).

5270MHZ-40MHZ BW-T6-TRIAL-19						5270MHZ-40MHZ BW-T6-TRIAL-20					
Hop #	Freq. (GHz)	Hop #	Freq. (GHz)	Hop #	Freq. (GHz)	Hop #	Freq. (GHz)	Hop #	Freq. (GHz)	Hop #	Freq. (GHz)
1	5.674	35	5.715	69	5.429	1	5.258	35	5.308	69	5.619
2	5.595	36	5.424	70	5.589	2	5.669	36	5.349	70	5.436
3	5.634	37	5.623	71	5.603	3	5.325	37	5.678	71	5.58
4	5.293	38	5.319	72	5.446	4	5.665	38	5.511	72	5.604
5	5.458	39	5.551	73	5.498	5	5.533	39	5.387	73	5.369
6	5.281	40	5.53	74	5.313	6	5.586	40	5.63	74	5.651
7	5.408	41	5.721	75	5.261	7	5.62	41	5.646	75	5.505
8	5.643	42	5.257	76	5.713	8	5.347	42	5.413	76	5.47
9	5.691	43	5.279	77	5.533	9	5.418	43	5.522	77	5.613
10	5.5	44	5.416	78	5.701	10	5.419	44	5.516	78	5.521
11	5.671	45	5.526	79	5.478	11	5.626	45	5.652	79	5.423
12	5.556	46	5.609	80	5.441	12	5.672	46	5.583	80	5.407
13	5.386	47	5.695	81	5.353	13	5.547	47	5.36	81	5.543
14	5.412	48	5.711	82	5.616	14	5.458	48	5.695	82	5.459
15	5.6	49	5.484	83	5.317	15	5.303	49	5.366	83	5.316
16	5.631	50	5.637	84	5.46	16	5.594	50	5.398	84	5.337
17	5.518	51	5.452	85	5.544	17	5.256	51	5.676	85	5.478
18	5.435	52	5.482	86	5.287	18	5.356	52	5.341	86	5.353
19	5.563	53	5.431	87	5.362	19	5.467	53	5.632	87	5.675
20	5.376	54	5.71	88	5.516	20	5.292	54	5.414	88	5.692
21	5.406	55	5.436	89	5.692	21	5.523	55	5.501	89	5.715
22	5.442	56	5.298	90	5.707	22	5.286	56	5.674	90	5.67
23	5.499	57	5.285	91	5.378	23	5.336	57	5.371	91	5.52
24	5.552	58	5.601	92	5.271	24	5.272	58	5.562	92	5.392
25	5.599	59	5.611	93	5.676	25	5.53	59	5.565	93	5.451
26	5.651	60	5.635	94	5.486	26	5.343	60	5.7	94	5.384
27	5.328	61	5.652	95	5.703	27	5.673	61	5.439	95	5.677
28	5.503	62	5.517	96	5.289	28	5.333	62	5.285	96	5.449
29	5.527	63	5.543	97	5.448	29	5.558	63	5.442	97	5.262
30	5.672	64	5.396	98	5.662	30	5.685	64	5.296	98	5.287
31	5.337	65	5.7	99	5.504	31	5.476	65	5.362	99	5.402
32	5.538	66	5.369	100	5.43	32	5.43	66	5.463	100	5.355
33	5.723	67	5.343			33	5.544	67	5.289		
34	5.537	68	5.659			34	5.64	68	5.712		

NOTE: RED text = frequencies within the channel bandwidth (Fl and Fh).

5270MHZ-40MHZ BW-T6-TRIAL-21						5270MHZ-40MHZ BW-T6-TRIAL-22					
Hop #	Freq. (GHz)	Hop #	Freq. (GHz)	Hop #	Freq. (GHz)	Hop #	Freq. (GHz)	Hop #	Freq. (GHz)	Hop #	Freq. (GHz)
1	5.515	35	5.255	69	5.68	1	5.634	35	5.334	69	5.396
2	5.484	36	5.613	70	5.616	2	5.454	36	5.706	70	5.413
3	5.273	37	5.26	71	5.536	3	5.405	37	5.464	71	5.277
4	5.412	38	5.266	72	5.606	4	5.48	38	5.439	72	5.569
5	5.654	39	5.416	73	5.607	5	5.638	39	5.691	73	5.364
6	5.538	40	5.394	74	5.669	6	5.688	40	5.564	74	5.482
7	5.585	41	5.594	75	5.39	7	5.546	41	5.719	75	5.297
8	5.539	42	5.5	76	5.362	8	5.31	42	5.625	76	5.316
9	5.67	43	5.493	77	5.626	9	5.481	43	5.669	77	5.539
10	5.306	44	5.435	78	5.279	10	5.432	44	5.28	78	5.585
11	5.337	45	5.399	79	5.584	11	5.563	45	5.446	79	5.668
12	5.656	46	5.632	80	5.365	12	5.322	46	5.367	80	5.509
13	5.385	47	5.265	81	5.717	13	5.556	47	5.57	81	5.39
14	5.47	48	5.691	82	5.529	14	5.69	48	5.437	82	5.354
15	5.659	49	5.456	83	5.587	15	5.472	49	5.633	83	5.471
16	5.662	50	5.357	84	5.611	16	5.721	50	5.44	84	5.497
17	5.696	51	5.715	85	5.658	17	5.621	51	5.303	85	5.627
18	5.445	52	5.434	86	5.258	18	5.37	52	5.348	86	5.683
19	5.3	53	5.507	87	5.711	19	5.461	53	5.344	87	5.352
20	5.543	54	5.263	88	5.564	20	5.532	54	5.468	88	5.326
21	5.259	55	5.437	89	5.472	21	5.53	55	5.43	89	5.681
22	5.349	56	5.291	90	5.667	22	5.467	56	5.528	90	5.589
23	5.506	57	5.386	91	5.333	23	5.582	57	5.389	91	5.594
24	5.6	58	5.549	92	5.575	24	5.403	58	5.649	92	5.253
25	5.605	59	5.569	93	5.694	25	5.717	59	5.332	93	5.422
26	5.609	60	5.478	94	5.555	26	5.401	60	5.722	94	5.548
27	5.674	61	5.698	95	5.51	27	5.391	61	5.426	95	5.499
28	5.641	62	5.303	96	5.532	28	5.711	62	5.294	96	5.35
29	5.724	63	5.638	97	5.418	29	5.266	63	5.384	97	5.659
30	5.586	64	5.512	98	5.486	30	5.72	64	5.519	98	5.639
31	5.43	65	5.284	99	5.488	31	5.624	65	5.428	99	5.313
32	5.679	66	5.599	100	5.353	32	5.359	66	5.675	100	5.338
33	5.317	67	5.608			33	5.667	67	5.279		
34	5.327	68	5.322			34	5.607	68	5.416		

NOTE: RED text = frequencies within the channel bandwidth (Fl and Fh).

5270MHZ-40MHZ BW-T6-TRIAL-23						5270MHZ-40MHZ BW-T6-TRIAL-24					
Hop #	Freq. (GHz)	Hop #	Freq. (GHz)	Hop #	Freq. (GHz)	Hop #	Freq. (GHz)	Hop #	Freq. (GHz)	Hop #	Freq. (GHz)
1	5.601	35	5.532	69	5.679	1	5.253	35	5.583	69	5.659
2	5.473	36	5.255	70	5.515	2	5.341	36	5.338	70	5.649
3	5.58	37	5.616	71	5.338	3	5.345	37	5.688	71	5.518
4	5.34	38	5.681	72	5.334	4	5.398	38	5.262	72	5.664
5	5.51	39	5.4	73	5.283	5	5.295	39	5.666	73	5.274
6	5.621	40	5.666	74	5.463	6	5.529	40	5.412	74	5.575
7	5.382	41	5.253	75	5.525	7	5.409	41	5.269	75	5.255
8	5.641	42	5.55	76	5.44	8	5.587	42	5.685	76	5.555
9	5.593	43	5.572	77	5.273	9	5.489	43	5.596	77	5.501
10	5.484	44	5.356	78	5.33	10	5.543	44	5.373	78	5.319
11	5.486	45	5.367	79	5.429	11	5.459	45	5.367	79	5.399
12	5.528	46	5.589	80	5.687	12	5.435	46	5.462	80	5.46
13	5.66	47	5.581	81	5.359	13	5.6	47	5.468	81	5.478
14	5.462	48	5.444	82	5.3	14	5.356	48	5.362	82	5.631
15	5.496	49	5.47	83	5.403	15	5.534	49	5.34	83	5.559
16	5.692	50	5.468	84	5.605	16	5.578	50	5.426	84	5.482
17	5.481	51	5.688	85	5.522	17	5.309	51	5.335	85	5.508
18	5.678	52	5.393	86	5.664	18	5.686	52	5.572	86	5.421
19	5.327	53	5.355	87	5.594	19	5.37	53	5.699	87	5.542
20	5.643	54	5.617	88	5.32	20	5.404	54	5.503	88	5.505
21	5.642	55	5.705	89	5.433	21	5.59	55	5.625	89	5.628
22	5.599	56	5.575	90	5.516	22	5.465	56	5.327	90	5.366
23	5.632	57	5.584	91	5.7	23	5.612	57	5.25	91	5.567
24	5.659	58	5.427	92	5.543	24	5.328	58	5.47	92	5.502
25	5.441	59	5.669	93	5.69	25	5.382	59	5.544	93	5.315
26	5.675	60	5.417	94	5.651	26	5.711	60	5.549	94	5.415
27	5.503	61	5.404	95	5.365	27	5.592	61	5.657	95	5.281
28	5.309	62	5.399	96	5.538	28	5.522	62	5.35	96	5.57
29	5.265	63	5.455	97	5.585	29	5.69	63	5.457	97	5.282
30	5.533	64	5.396	98	5.424	30	5.374	64	5.408	98	5.65
31	5.414	65	5.523	99	5.275	31	5.391	65	5.353	99	5.7
32	5.673	66	5.478	100	5.535	32	5.671	66	5.293	100	5.716
33	5.614	67	5.43			33	5.351	67	5.379		
34	5.716	68	5.453			34	5.648	68	5.42		

NOTE: RED text = frequencies within the channel bandwidth (Fl and Fh).

5270MHZ-40MHZ BW-T6-TRIAL-25						5270MHZ-40MHZ BW-T6-TRIAL-26					
Hop #	Freq. (GHz)	Hop #	Freq. (GHz)	Hop #	Freq. (GHz)	Hop #	Freq. (GHz)	Hop #	Freq. (GHz)	Hop #	Freq. (GHz)
1	5.446	35	5.674	69	5.565	1	5.648	35	5.634	69	5.314
2	5.572	36	5.587	70	5.255	2	5.423	36	5.437	70	5.503
3	5.503	37	5.62	71	5.573	3	5.652	37	5.519	71	5.382
4	5.313	38	5.412	72	5.378	4	5.357	38	5.469	72	5.618
5	5.414	39	5.307	73	5.405	5	5.61	39	5.346	73	5.376
6	5.485	40	5.678	74	5.429	6	5.724	40	5.461	74	5.558
7	5.49	41	5.652	75	5.343	7	5.515	41	5.32	75	5.492
8	5.608	42	5.713	76	5.4	8	5.508	42	5.669	76	5.506
9	5.374	43	5.591	77	5.707	9	5.569	43	5.513	77	5.654
10	5.377	44	5.66	78	5.422	10	5.529	44	5.68	78	5.311
11	5.432	45	5.424	79	5.699	11	5.397	45	5.521	79	5.576
12	5.362	46	5.544	80	5.546	12	5.721	46	5.69	80	5.458
13	5.438	47	5.38	81	5.723	13	5.66	47	5.63	81	5.272
14	5.612	48	5.262	82	5.67	14	5.541	48	5.429	82	5.255
15	5.31	49	5.531	83	5.334	15	5.495	49	5.668	83	5.301
16	5.273	50	5.491	84	5.252	16	5.502	50	5.588	84	5.265
17	5.496	51	5.457	85	5.721	17	5.325	51	5.681	85	5.406
18	5.538	52	5.556	86	5.469	18	5.614	52	5.367	86	5.489
19	5.643	53	5.39	87	5.459	19	5.615	53	5.268	87	5.658
20	5.476	54	5.54	88	5.658	20	5.254	54	5.621	88	5.628
21	5.647	55	5.409	89	5.718	21	5.672	55	5.663	89	5.494
22	5.633	56	5.549	90	5.663	22	5.567	56	5.366	90	5.37
23	5.602	57	5.306	91	5.671	23	5.47	57	5.331	91	5.685
24	5.69	58	5.687	92	5.266	24	5.345	58	5.457	92	5.692
25	5.381	59	5.375	93	5.373	25	5.294	59	5.386	93	5.564
26	5.575	60	5.356	94	5.694	26	5.682	60	5.438	94	5.468
27	5.401	61	5.483	95	5.417	27	5.659	61	5.631	95	5.27
28	5.423	62	5.274	96	5.641	28	5.343	62	5.679	96	5.7
29	5.615	63	5.398	97	5.279	29	5.344	63	5.664	97	5.623
30	5.593	64	5.474	98	5.563	30	5.593	64	5.643	98	5.592
31	5.299	65	5.32	99	5.263	31	5.56	65	5.504	99	5.64
32	5.416	66	5.64	100	5.395	32	5.347	66	5.674	100	5.48
33	5.42	67	5.43			33	5.465	67	5.487		
34	5.348	68	5.333			34	5.485	68	5.574		

NOTE: RED text = frequencies within the channel bandwidth (Fl and Fh).

5270MHZ-40MHZ BW-T6-TRIAL-27						5270MHZ-40MHZ BW-T6-TRIAL-28					
Hop #	Freq. (GHz)	Hop #	Freq. (GHz)	Hop #	Freq. (GHz)	Hop #	Freq. (GHz)	Hop #	Freq. (GHz)	Hop #	Freq. (GHz)
1	5.716	35	5.449	69	5.301	1	5.596	35	5.395	69	5.282
2	5.391	36	5.386	70	5.621	2	5.495	36	5.327	70	5.711
3	5.623	37	5.48	71	5.469	3	5.27	37	5.586	71	5.371
4	5.567	38	5.46	72	5.708	4	5.458	38	5.275	72	5.637
5	5.424	39	5.372	73	5.252	5	5.501	39	5.694	73	5.297
6	5.315	40	5.636	74	5.264	6	5.432	40	5.315	74	5.556
7	5.468	41	5.495	75	5.413	7	5.399	41	5.681	75	5.484
8	5.297	42	5.454	76	5.29	8	5.366	42	5.54	76	5.443
9	5.299	43	5.284	77	5.6	9	5.299	43	5.628	77	5.287
10	5.38	44	5.456	78	5.608	10	5.574	44	5.554	78	5.401
11	5.578	45	5.377	79	5.619	11	5.51	45	5.476	79	5.331
12	5.545	46	5.652	80	5.52	12	5.599	46	5.659	80	5.347
13	5.412	47	5.499	81	5.557	13	5.448	47	5.389	81	5.721
14	5.311	48	5.538	82	5.422	14	5.713	48	5.601	82	5.684
15	5.272	49	5.516	83	5.448	15	5.675	49	5.616	83	5.329
16	5.373	50	5.7	84	5.484	16	5.355	50	5.658	84	5.316
17	5.399	51	5.475	85	5.54	17	5.594	51	5.629	85	5.719
18	5.547	52	5.604	86	5.522	18	5.608	52	5.614	86	5.715
19	5.597	53	5.319	87	5.574	19	5.568	53	5.526	87	5.585
20	5.434	54	5.631	88	5.509	20	5.372	54	5.427	88	5.511
21	5.288	55	5.291	89	5.584	21	5.67	55	5.643	89	5.375
22	5.717	56	5.711	90	5.49	22	5.648	56	5.319	90	5.393
23	5.325	57	5.568	91	5.541	23	5.424	57	5.453	91	5.486
24	5.32	58	5.582	92	5.302	24	5.488	58	5.588	92	5.421
25	5.309	59	5.308	93	5.683	25	5.543	59	5.368	93	5.533
26	5.303	60	5.255	94	5.444	26	5.69	60	5.499	94	5.527
27	5.525	61	5.463	95	5.336	27	5.669	61	5.408	95	5.698
28	5.408	62	5.276	96	5.551	28	5.252	62	5.44	96	5.706
29	5.583	63	5.266	97	5.55	29	5.705	63	5.581	97	5.402
30	5.685	64	5.43	98	5.427	30	5.381	64	5.724	98	5.324
31	5.39	65	5.342	99	5.464	31	5.49	65	5.292	99	5.322
32	5.476	66	5.531	100	5.648	32	5.291	66	5.531	100	5.605
33	5.485	67	5.686			33	5.661	67	5.428		
34	5.635	68	5.646			34	5.437	68	5.387		

NOTE: RED text = frequencies within the channel bandwidth (Fl and Fh).

5270MHZ-40MHZ BW-T6-TRIAL-29						5270MHZ-40MHZ BW-T6-TRIAL-30					
Hop #	Freq. (GHz)	Hop #	Freq. (GHz)	Hop #	Freq. (GHz)	Hop #	Freq. (GHz)	Hop #	Freq. (GHz)	Hop #	Freq. (GHz)
1	5.662	35	5.628	69	5.614	1	5.619	35	5.421	69	5.391
2	5.516	36	5.486	70	5.527	2	5.319	36	5.695	70	5.275
3	5.608	37	5.476	71	5.508	3	5.283	37	5.455	71	5.274
4	5.316	38	5.288	72	5.719	4	5.263	38	5.337	72	5.524
5	5.616	39	5.555	73	5.627	5	5.261	39	5.713	73	5.593
6	5.348	40	5.402	74	5.559	6	5.395	40	5.596	74	5.55
7	5.342	41	5.265	75	5.422	7	5.295	41	5.333	75	5.335
8	5.266	42	5.643	76	5.682	8	5.309	42	5.558	76	5.526
9	5.344	43	5.319	77	5.567	9	5.311	43	5.581	77	5.662
10	5.25	44	5.389	78	5.584	10	5.282	44	5.648	78	5.591
11	5.565	45	5.523	79	5.415	11	5.56	45	5.31	79	5.262
12	5.598	46	5.688	80	5.704	12	5.37	46	5.276	80	5.499
13	5.507	47	5.297	81	5.268	13	5.561	47	5.323	81	5.6
14	5.605	48	5.258	82	5.414	14	5.393	48	5.53	82	5.289
15	5.52	49	5.252	83	5.671	15	5.271	49	5.452	83	5.584
16	5.539	50	5.346	84	5.338	16	5.506	50	5.376	84	5.671
17	5.658	51	5.253	85	5.499	17	5.33	51	5.635	85	5.264
18	5.471	52	5.67	86	5.433	18	5.456	52	5.719	86	5.58
19	5.387	53	5.357	87	5.661	19	5.317	53	5.287	87	5.535
20	5.653	54	5.513	88	5.434	20	5.29	54	5.447	88	5.531
21	5.386	55	5.472	89	5.697	21	5.653	55	5.623	89	5.574
22	5.683	56	5.401	90	5.378	22	5.377	56	5.721	90	5.285
23	5.577	57	5.32	91	5.408	23	5.573	57	5.364	91	5.572
24	5.312	58	5.489	92	5.364	24	5.62	58	5.294	92	5.267
25	5.388	59	5.592	93	5.447	25	5.666	59	5.658	93	5.372
26	5.714	60	5.484	94	5.28	26	5.601	60	5.373	94	5.724
27	5.351	61	5.412	95	5.45	27	5.305	61	5.51	95	5.403
28	5.586	62	5.695	96	5.35	28	5.533	62	5.291	96	5.656
29	5.665	63	5.536	97	5.678	29	5.639	63	5.556	97	5.508
30	5.385	64	5.359	98	5.532	30	5.667	64	5.646	98	5.557
31	5.7	65	5.587	99	5.26	31	5.676	65	5.296	99	5.685
32	5.641	66	5.496	100	5.576	32	5.396	66	5.631	100	5.672
33	5.382	67	5.511			33	5.594	67	5.628		
34	5.279	68	5.432			34	5.489	68	5.366		

NOTE: RED text = frequencies within the channel bandwidth (Fl and Fh).

A.6 Radar Type 6 Parameters for 80 MHz Bandwidth

5290MHZ-80MHZ BW-T6-TRIAL-1						5290MHZ-80MHZ BW-T6-TRIAL-2					
Hop #	Freq. (GHz)	Hop #	Freq. (GHz)	Hop #	Freq. (GHz)	Hop #	Freq. (GHz)	Hop #	Freq. (GHz)	Hop #	Freq. (GHz)
1	5.523	35	5.534	69	5.402	1	5.411	35	5.508	69	5.422
2	5.444	36	5.543	70	5.702	2	5.662	36	5.568	70	5.577
3	5.615	37	5.272	71	5.37	3	5.357	37	5.611	71	5.676
4	5.5	38	5.604	72	5.559	4	5.273	38	5.627	72	5.718
5	5.435	39	5.545	73	5.579	5	5.368	39	5.559	73	5.293
6	5.585	40	5.372	74	5.507	6	5.697	40	5.369	74	5.491
7	5.447	41	5.425	75	5.296	7	5.427	41	5.528	75	5.288
8	5.645	42	5.571	76	5.671	8	5.344	42	5.438	76	5.359
9	5.491	43	5.41	77	5.337	9	5.518	43	5.581	77	5.525
10	5.647	44	5.335	78	5.573	10	5.604	44	5.435	78	5.674
11	5.267	45	5.373	79	5.502	11	5.637	45	5.713	79	5.531
12	5.632	46	5.624	80	5.583	12	5.35	46	5.625	80	5.377
13	5.556	47	5.682	81	5.492	13	5.667	47	5.66	81	5.651
14	5.32	48	5.253	82	5.686	14	5.705	48	5.646	82	5.331
15	5.345	49	5.631	83	5.717	15	5.336	49	5.388	83	5.447
16	5.426	50	5.34	84	5.313	16	5.618	50	5.589	84	5.666
17	5.719	51	5.607	85	5.452	17	5.596	51	5.259	85	5.366
18	5.536	52	5.292	86	5.612	18	5.574	52	5.287	86	5.282
19	5.723	53	5.399	87	5.391	19	5.281	53	5.557	87	5.548
20	5.564	54	5.52	88	5.691	20	5.263	54	5.425	88	5.567
21	5.648	55	5.293	89	5.544	21	5.62	55	5.647	89	5.442
22	5.434	56	5.44	90	5.275	22	5.529	56	5.452	90	5.252
23	5.407	57	5.566	91	5.288	23	5.313	57	5.608	91	5.599
24	5.282	58	5.666	92	5.304	24	5.426	58	5.339	92	5.308
25	5.687	59	5.363	93	5.3	25	5.428	59	5.421	93	5.343
26	5.541	60	5.581	94	5.388	26	5.612	60	5.524	94	5.286
27	5.58	61	5.439	95	5.371	27	5.613	61	5.688	95	5.547
28	5.51	62	5.332	96	5.274	28	5.304	62	5.573	96	5.499
29	5.47	63	5.411	97	5.532	29	5.392	63	5.67	97	5.539
30	5.298	64	5.318	98	5.656	30	5.476	64	5.511	98	5.299
31	5.392	65	5.297	99	5.593	31	5.554	65	5.484	99	5.277
32	5.66	66	5.433	100	5.65	32	5.501	66	5.658	100	5.261
33	5.378	67	5.575			33	5.655	67	5.335		
34	5.419	68	5.504			34	5.25	68	5.691		

NOTE: RED text = frequencies within the channel bandwidth (Fl and Fh).

5290MHZ-80MHZ BW-T6-TRIAL-3						5290MHZ-80MHZ BW-T6-TRIAL-4					
Hop #	Freq. (GHz)	Hop #	Freq. (GHz)	Hop #	Freq. (GHz)	Hop #	Freq. (GHz)	Hop #	Freq. (GHz)	Hop #	Freq. (GHz)
1	5.311	35	5.651	69	5.609	1	5.593	35	5.662	69	5.522
2	5.425	36	5.704	70	5.306	2	5.329	36	5.506	70	5.628
3	5.67	37	5.491	71	5.718	3	5.257	37	5.689	71	5.649
4	5.381	38	5.494	72	5.318	4	5.324	38	5.458	72	5.661
5	5.572	39	5.495	73	5.279	5	5.314	39	5.625	73	5.572
6	5.307	40	5.488	74	5.616	6	5.396	40	5.478	74	5.26
7	5.345	41	5.644	75	5.629	7	5.632	41	5.428	75	5.379
8	5.252	42	5.372	76	5.653	8	5.276	42	5.382	76	5.432
9	5.502	43	5.328	77	5.557	9	5.701	43	5.465	77	5.347
10	5.689	44	5.71	78	5.289	10	5.638	44	5.482	78	5.724
11	5.627	45	5.481	79	5.332	11	5.371	45	5.263	79	5.539
12	5.506	46	5.323	80	5.553	12	5.303	46	5.699	80	5.337
13	5.577	47	5.632	81	5.457	13	5.312	47	5.37	81	5.518
14	5.467	48	5.405	82	5.474	14	5.542	48	5.528	82	5.252
15	5.707	49	5.346	83	5.621	15	5.389	49	5.569	83	5.515
16	5.561	50	5.403	84	5.46	16	5.317	50	5.622	84	5.53
17	5.556	51	5.61	85	5.608	17	5.339	51	5.658	85	5.596
18	5.406	52	5.533	86	5.661	18	5.598	52	5.663	86	5.696
19	5.288	53	5.544	87	5.686	19	5.573	53	5.578	87	5.552
20	5.702	54	5.669	88	5.446	20	5.354	54	5.513	88	5.547
21	5.324	55	5.374	89	5.555	21	5.509	55	5.41	89	5.414
22	5.623	56	5.724	90	5.417	22	5.388	56	5.637	90	5.549
23	5.687	57	5.274	91	5.69	23	5.299	57	5.404	91	5.446
24	5.401	58	5.454	92	5.27	24	5.526	58	5.333	92	5.421
25	5.435	59	5.44	93	5.624	25	5.634	59	5.677	93	5.571
26	5.619	60	5.45	94	5.708	26	5.525	60	5.615	94	5.554
27	5.628	61	5.389	95	5.462	27	5.282	61	5.683	95	5.56
28	5.475	62	5.68	96	5.347	28	5.484	62	5.574	96	5.346
29	5.66	63	5.294	97	5.442	29	5.706	63	5.411	97	5.714
30	5.444	64	5.504	98	5.596	30	5.631	64	5.423	98	5.285
31	5.25	65	5.599	99	5.287	31	5.348	65	5.511	99	5.322
32	5.485	66	5.362	100	5.531	32	5.495	66	5.444	100	5.261
33	5.618	67	5.607			33	5.327	67	5.576		
34	5.642	68	5.453			34	5.36	68	5.427		

NOTE: RED text = frequencies within the channel bandwidth (Fl and Fh).

5290MHZ-80MHZ BW-T6-TRIAL-5						5290MHZ-80MHZ BW-T6-TRIAL-6					
Hop #	Freq. (GHz)	Hop #	Freq. (GHz)	Hop #	Freq. (GHz)	Hop #	Freq. (GHz)	Hop #	Freq. (GHz)	Hop #	Freq. (GHz)
1	5.644	35	5.376	69	5.623	1	5.666	35	5.26	69	5.557
2	5.659	36	5.558	70	5.31	2	5.279	36	5.347	70	5.448
3	5.689	37	5.447	71	5.489	3	5.371	37	5.404	71	5.333
4	5.307	38	5.675	72	5.365	4	5.438	38	5.452	72	5.328
5	5.676	39	5.708	73	5.327	5	5.616	39	5.392	73	5.622
6	5.671	40	5.691	74	5.7	6	5.454	40	5.483	74	5.556
7	5.573	41	5.262	75	5.593	7	5.447	41	5.721	75	5.364
8	5.303	42	5.408	76	5.41	8	5.353	42	5.457	76	5.48
9	5.361	43	5.394	77	5.383	9	5.52	43	5.697	77	5.407
10	5.46	44	5.426	78	5.292	10	5.701	44	5.361	78	5.7
11	5.389	45	5.713	79	5.507	11	5.419	45	5.441	79	5.572
12	5.626	46	5.662	80	5.49	12	5.408	46	5.3	80	5.433
13	5.527	47	5.62	81	5.596	13	5.489	47	5.607	81	5.619
14	5.687	48	5.346	82	5.598	14	5.294	48	5.573	82	5.487
15	5.324	49	5.328	83	5.577	15	5.505	49	5.654	83	5.651
16	5.468	50	5.575	84	5.711	16	5.297	50	5.393	84	5.637
17	5.504	51	5.641	85	5.379	17	5.581	51	5.638	85	5.349
18	5.536	52	5.441	86	5.311	18	5.676	52	5.308	86	5.678
19	5.679	53	5.434	87	5.252	19	5.436	53	5.504	87	5.485
20	5.545	54	5.314	88	5.563	20	5.593	54	5.579	88	5.315
21	5.486	55	5.438	89	5.38	21	5.56	55	5.618	89	5.617
22	5.495	56	5.419	90	5.467	22	5.675	56	5.363	90	5.275
23	5.357	57	5.648	91	5.392	23	5.471	57	5.602	91	5.376
24	5.288	58	5.291	92	5.435	24	5.382	58	5.564	92	5.596
25	5.397	59	5.608	93	5.259	25	5.563	59	5.332	93	5.285
26	5.554	60	5.569	94	5.309	26	5.263	60	5.58	94	5.559
27	5.433	61	5.611	95	5.599	27	5.413	61	5.449	95	5.508
28	5.4	62	5.538	96	5.256	28	5.526	62	5.316	96	5.664
29	5.678	63	5.661	97	5.464	29	5.677	63	5.266	97	5.67
30	5.39	64	5.491	98	5.375	30	5.493	64	5.587	98	5.61
31	5.281	65	5.43	99	5.602	31	5.459	65	5.468	99	5.633
32	5.629	66	5.503	100	5.487	32	5.444	66	5.406	100	5.421
33	5.684	67	5.668			33	5.55	67	5.6		
34	5.445	68	5.335			34	5.621	68	5.427		

NOTE: RED text = frequencies within the channel bandwidth (Fl and Fh).

5290MHZ-80MHZ BW-T6-TRIAL-7						5290MHZ-80MHZ BW-T6-TRIAL-8					
Hop #	Freq. (GHz)	Hop #	Freq. (GHz)	Hop #	Freq. (GHz)	Hop #	Freq. (GHz)	Hop #	Freq. (GHz)	Hop #	Freq. (GHz)
1	5.404	35	5.257	69	5.373	1	5.378	35	5.438	69	5.376
2	5.259	36	5.393	70	5.636	2	5.404	36	5.658	70	5.47
3	5.372	37	5.604	71	5.282	3	5.673	37	5.391	71	5.456
4	5.506	38	5.694	72	5.719	4	5.627	38	5.701	72	5.409
5	5.333	39	5.444	73	5.381	5	5.303	39	5.631	73	5.413
6	5.361	40	5.443	74	5.647	6	5.459	40	5.439	74	5.621
7	5.538	41	5.389	75	5.347	7	5.596	41	5.328	75	5.619
8	5.34	42	5.38	76	5.53	8	5.577	42	5.383	76	5.694
9	5.262	43	5.705	77	5.386	9	5.388	43	5.652	77	5.421
10	5.687	44	5.458	78	5.575	10	5.347	44	5.665	78	5.539
11	5.524	45	5.6	79	5.706	11	5.451	45	5.375	79	5.431
12	5.497	46	5.352	80	5.714	12	5.594	46	5.488	80	5.564
13	5.549	47	5.435	81	5.621	13	5.699	47	5.356	81	5.485
14	5.568	48	5.718	82	5.344	14	5.724	48	5.544	82	5.609
15	5.618	49	5.64	83	5.507	15	5.674	49	5.377	83	5.553
16	5.62	50	5.298	84	5.312	16	5.405	50	5.714	84	5.668
17	5.564	51	5.59	85	5.533	17	5.499	51	5.406	85	5.425
18	5.343	52	5.467	86	5.424	18	5.41	52	5.677	86	5.338
19	5.667	53	5.306	87	5.301	19	5.331	53	5.719	87	5.469
20	5.697	54	5.369	88	5.328	20	5.365	54	5.28	88	5.559
21	5.622	55	5.574	89	5.722	21	5.464	55	5.386	89	5.51
22	5.558	56	5.608	90	5.324	22	5.711	56	5.514	90	5.288
23	5.597	57	5.539	91	5.628	23	5.709	57	5.565	91	5.36
24	5.565	58	5.617	92	5.359	24	5.381	58	5.629	92	5.718
25	5.673	59	5.688	93	5.286	25	5.275	59	5.495	93	5.298
26	5.338	60	5.514	94	5.346	26	5.433	60	5.294	94	5.423
27	5.466	61	5.322	95	5.334	27	5.58	61	5.663	95	5.314
28	5.509	62	5.31	96	5.609	28	5.304	62	5.593	96	5.429
29	5.476	63	5.633	97	5.417	29	5.44	63	5.558	97	5.676
30	5.315	64	5.69	98	5.646	30	5.599	64	5.586	98	5.55
31	5.723	65	5.363	99	5.357	31	5.34	65	5.442	99	5.526
32	5.414	66	5.669	100	5.685	32	5.454	66	5.678	100	5.287
33	5.576	67	5.269			33	5.478	67	5.607		
34	5.708	68	5.715			34	5.477	68	5.458		

NOTE: RED text = frequencies within the channel bandwidth (Fl and Fh).

5290MHZ-80MHZ BW-T6-TRIAL-9						5290MHZ-80MHZ BW-T6-TRIAL-10					
Hop #	Freq. (GHz)	Hop #	Freq. (GHz)	Hop #	Freq. (GHz)	Hop #	Freq. (GHz)	Hop #	Freq. (GHz)	Hop #	Freq. (GHz)
1	5.39	35	5.535	69	5.289	1	5.476	35	5.614	69	5.358
2	5.513	36	5.514	70	5.407	2	5.365	36	5.411	70	5.689
3	5.634	37	5.627	71	5.394	3	5.616	37	5.429	71	5.274
4	5.544	38	5.651	72	5.518	4	5.327	38	5.641	72	5.445
5	5.674	39	5.672	73	5.353	5	5.665	39	5.657	73	5.555
6	5.414	40	5.628	74	5.265	6	5.452	40	5.343	74	5.534
7	5.512	41	5.531	75	5.257	7	5.321	41	5.301	75	5.362
8	5.715	42	5.622	76	5.432	8	5.387	42	5.493	76	5.684
9	5.424	43	5.504	77	5.354	9	5.622	43	5.672	77	5.679
10	5.416	44	5.326	78	5.565	10	5.434	44	5.422	78	5.333
11	5.591	45	5.37	79	5.536	11	5.251	45	5.443	79	5.394
12	5.343	46	5.435	80	5.426	12	5.435	46	5.412	80	5.708
13	5.34	47	5.385	81	5.59	13	5.473	47	5.637	81	5.527
14	5.411	48	5.428	82	5.471	14	5.282	48	5.293	82	5.623
15	5.666	49	5.268	83	5.632	15	5.349	49	5.524	83	5.544
16	5.714	50	5.673	84	5.392	16	5.353	50	5.615	84	5.413
17	5.436	51	5.42	85	5.624	17	5.632	51	5.554	85	5.551
18	5.612	52	5.721	86	5.464	18	5.49	52	5.656	86	5.275
19	5.388	53	5.379	87	5.382	19	5.64	53	5.451	87	5.626
20	5.256	54	5.363	88	5.406	20	5.261	54	5.43	88	5.467
21	5.554	55	5.722	89	5.56	21	5.416	55	5.324	89	5.427
22	5.434	56	5.516	90	5.615	22	5.268	56	5.546	90	5.629
23	5.695	57	5.573	91	5.551	23	5.386	57	5.284	91	5.563
24	5.659	58	5.261	92	5.689	24	5.486	58	5.428	92	5.705
25	5.488	59	5.542	93	5.371	25	5.552	59	5.503	93	5.338
26	5.567	60	5.262	94	5.288	26	5.415	60	5.652	94	5.666
27	5.266	61	5.412	95	5.602	27	5.556	61	5.719	95	5.32
28	5.421	62	5.533	96	5.708	28	5.497	62	5.259	96	5.678
29	5.616	63	5.593	97	5.415	29	5.577	63	5.595	97	5.674
30	5.719	64	5.571	98	5.639	30	5.56	64	5.54	98	5.403
31	5.356	65	5.523	99	5.64	31	5.393	65	5.692	99	5.27
32	5.274	66	5.592	100	5.336	32	5.651	66	5.558	100	5.44
33	5.717	67	5.404			33	5.283	67	5.34		
34	5.559	68	5.568			34	5.41	68	5.647		

NOTE: RED text = frequencies within the channel bandwidth (Fl and Fh).

5290MHZ-80MHZ BW-T6-TRIAL-11						5290MHZ-80MHZ BW-T6-TRIAL-12					
Hop #	Freq. (GHz)	Hop #	Freq. (GHz)	Hop #	Freq. (GHz)	Hop #	Freq. (GHz)	Hop #	Freq. (GHz)	Hop #	Freq. (GHz)
1	5.52	35	5.366	69	5.265	1	5.462	35	5.44	69	5.478
2	5.464	36	5.259	70	5.702	2	5.538	36	5.651	70	5.551
3	5.398	37	5.376	71	5.572	3	5.252	37	5.449	71	5.703
4	5.306	38	5.718	72	5.612	4	5.509	38	5.391	72	5.366
5	5.317	39	5.556	73	5.533	5	5.345	39	5.348	73	5.632
6	5.709	40	5.566	74	5.344	6	5.662	40	5.56	74	5.6
7	5.587	41	5.462	75	5.404	7	5.654	41	5.389	75	5.258
8	5.541	42	5.553	76	5.297	8	5.396	42	5.642	76	5.613
9	5.476	43	5.451	77	5.413	9	5.685	43	5.33	77	5.633
10	5.466	44	5.683	78	5.68	10	5.416	44	5.533	78	5.39
11	5.707	45	5.494	79	5.679	11	5.49	45	5.545	79	5.556
12	5.529	46	5.392	80	5.391	12	5.471	46	5.663	80	5.507
13	5.498	47	5.365	81	5.279	13	5.508	47	5.321	81	5.709
14	5.567	48	5.493	82	5.71	14	5.547	48	5.398	82	5.639
15	5.486	49	5.367	83	5.43	15	5.491	49	5.333	83	5.525
16	5.714	50	5.69	84	5.378	16	5.38	50	5.495	84	5.621
17	5.403	51	5.662	85	5.36	17	5.721	51	5.417	85	5.511
18	5.696	52	5.673	86	5.357	18	5.426	52	5.317	86	5.257
19	5.405	53	5.448	87	5.439	19	5.286	53	5.251	87	5.596
20	5.353	54	5.479	88	5.523	20	5.37	54	5.381	88	5.419
21	5.272	55	5.387	89	5.717	21	5.536	55	5.723	89	5.566
22	5.293	56	5.56	90	5.635	22	5.631	56	5.326	90	5.42
23	5.634	57	5.419	91	5.288	23	5.48	57	5.253	91	5.427
24	5.5	58	5.499	92	5.302	24	5.612	58	5.656	92	5.72
25	5.607	59	5.652	93	5.598	25	5.346	59	5.694	93	5.444
26	5.322	60	5.575	94	5.432	26	5.59	60	5.277	94	5.512
27	5.675	61	5.678	95	5.539	27	5.29	61	5.674	95	5.34
28	5.472	62	5.589	96	5.456	28	5.306	62	5.329	96	5.409
29	5.282	63	5.674	97	5.3	29	5.505	63	5.315	97	5.658
30	5.287	64	5.492	98	5.475	30	5.36	64	5.702	98	5.557
31	5.408	65	5.526	99	5.555	31	5.262	65	5.297	99	5.314
32	5.25	66	5.35	100	5.64	32	5.387	66	5.714	100	5.283
33	5.722	67	5.591			33	5.364	67	5.372		
34	5.383	68	5.666			34	5.303	68	5.673		

NOTE: RED text = frequencies within the channel bandwidth (Fl and Fh).

5290MHZ-80MHZ BW-T6-TRIAL-13						5290MHZ-80MHZ BW-T6-TRIAL-14					
Hop #	Freq. (GHz)	Hop #	Freq. (GHz)	Hop #	Freq. (GHz)	Hop #	Freq. (GHz)	Hop #	Freq. (GHz)	Hop #	Freq. (GHz)
1	5.439	35	5.675	69	5.56	1	5.285	35	5.665	69	5.295
2	5.353	36	5.616	70	5.667	2	5.304	36	5.311	70	5.353
3	5.705	37	5.414	71	5.582	3	5.331	37	5.561	71	5.291
4	5.279	38	5.662	72	5.603	4	5.556	38	5.584	72	5.557
5	5.426	39	5.495	73	5.628	5	5.432	39	5.357	73	5.326
6	5.663	40	5.715	74	5.626	6	5.528	40	5.655	74	5.463
7	5.508	41	5.406	75	5.535	7	5.448	41	5.292	75	5.31
8	5.701	42	5.368	76	5.518	8	5.362	42	5.48	76	5.595
9	5.323	43	5.579	77	5.273	9	5.438	43	5.543	77	5.409
10	5.376	44	5.266	78	5.494	10	5.554	44	5.592	78	5.61
11	5.637	45	5.334	79	5.63	11	5.542	45	5.288	79	5.692
12	5.554	46	5.413	80	5.36	12	5.415	46	5.437	80	5.649
13	5.384	47	5.281	81	5.34	13	5.52	47	5.65	81	5.708
14	5.367	48	5.583	82	5.294	14	5.582	48	5.633	82	5.434
15	5.412	49	5.309	83	5.347	15	5.672	49	5.459	83	5.572
16	5.528	50	5.563	84	5.491	16	5.654	50	5.41	84	5.6
17	5.467	51	5.322	85	5.53	17	5.34	51	5.427	85	5.606
18	5.569	52	5.389	86	5.314	18	5.356	52	5.653	86	5.475
19	5.668	53	5.591	87	5.342	19	5.324	53	5.503	87	5.687
20	5.526	54	5.253	88	5.723	20	5.401	54	5.635	88	5.317
21	5.506	55	5.652	89	5.712	21	5.612	55	5.259	89	5.456
22	5.694	56	5.67	90	5.72	22	5.308	56	5.358	90	5.67
23	5.609	57	5.58	91	5.456	23	5.422	57	5.677	91	5.553
24	5.482	58	5.3	92	5.578	24	5.315	58	5.604	92	5.457
25	5.575	59	5.558	93	5.51	25	5.465	59	5.376	93	5.558
26	5.711	60	5.436	94	5.379	26	5.661	60	5.699	94	5.668
27	5.462	61	5.577	95	5.573	27	5.443	61	5.636	95	5.68
28	5.301	62	5.562	96	5.659	28	5.597	62	5.428	96	5.302
29	5.32	63	5.606	97	5.318	29	5.39	63	5.713	97	5.627
30	5.664	64	5.339	98	5.643	30	5.581	64	5.407	98	5.493
31	5.618	65	5.498	99	5.512	31	5.546	65	5.3	99	5.587
32	5.532	66	5.717	100	5.559	32	5.327	66	5.501	100	5.671
33	5.331	67	5.265			33	5.577	67	5.268		
34	5.634	68	5.649			34	5.282	68	5.55		

NOTE: RED text = frequencies within the channel bandwidth (Fl and Fh).

5290MHZ-80MHZ BW-T6-TRIAL-15						5290MHZ-80MHZ BW-T6-TRIAL-16					
Hop #	Freq. (GHz)	Hop #	Freq. (GHz)	Hop #	Freq. (GHz)	Hop #	Freq. (GHz)	Hop #	Freq. (GHz)	Hop #	Freq. (GHz)
1	5.58	35	5.667	69	5.674	1	5.466	35	5.658	69	5.393
2	5.631	36	5.382	70	5.663	2	5.589	36	5.698	70	5.363
3	5.532	37	5.26	71	5.61	3	5.672	37	5.316	71	5.715
4	5.634	38	5.449	72	5.456	4	5.714	38	5.436	72	5.488
5	5.534	39	5.478	73	5.582	5	5.296	39	5.279	73	5.441
6	5.653	40	5.278	74	5.262	6	5.664	40	5.667	74	5.476
7	5.701	41	5.4	75	5.267	7	5.675	41	5.432	75	5.332
8	5.607	42	5.639	76	5.603	8	5.609	42	5.401	76	5.695
9	5.561	43	5.291	77	5.378	9	5.526	43	5.692	77	5.673
10	5.525	44	5.39	78	5.488	10	5.422	44	5.607	78	5.712
11	5.584	45	5.258	79	5.303	11	5.265	45	5.465	79	5.685
12	5.343	46	5.707	80	5.255	12	5.57	46	5.263	80	5.365
13	5.293	47	5.685	81	5.468	13	5.606	47	5.591	81	5.374
14	5.533	48	5.298	82	5.432	14	5.628	48	5.25	82	5.549
15	5.53	49	5.385	83	5.375	15	5.669	49	5.483	83	5.474
16	5.287	50	5.657	84	5.48	16	5.3	50	5.26	84	5.447
17	5.263	51	5.669	85	5.55	17	5.477	51	5.44	85	5.257
18	5.684	52	5.348	86	5.433	18	5.721	52	5.377	86	5.255
19	5.42	53	5.586	87	5.505	19	5.294	53	5.427	87	5.262
20	5.621	54	5.283	88	5.472	20	5.505	54	5.278	88	5.339
21	5.311	55	5.637	89	5.325	21	5.601	55	5.522	89	5.429
22	5.662	56	5.571	90	5.713	22	5.656	56	5.524	90	5.443
23	5.307	57	5.57	91	5.641	23	5.66	57	5.634	91	5.529
24	5.512	58	5.344	92	5.566	24	5.268	58	5.348	92	5.686
25	5.604	59	5.29	93	5.568	25	5.506	59	5.681	93	5.481
26	5.526	60	5.481	94	5.393	26	5.271	60	5.512	94	5.415
27	5.476	61	5.35	95	5.531	27	5.666	61	5.493	95	5.4
28	5.459	62	5.44	96	5.682	28	5.324	62	5.572	96	5.336
29	5.329	63	5.676	97	5.722	29	5.689	63	5.688	97	5.28
30	5.681	64	5.622	98	5.644	30	5.359	64	5.559	98	5.451
31	5.648	65	5.494	99	5.712	31	5.552	65	5.655	99	5.364
32	5.446	66	5.403	100	5.429	32	5.531	66	5.414	100	5.551
33	5.487	67	5.34			33	5.379	67	5.291		
34	5.269	68	5.406			34	5.48	68	5.595		

NOTE: RED text = frequencies within the channel bandwidth (Fl and Fh).

5290MHZ-80MHZ BW-T6-TRIAL-17						5290MHZ-80MHZ BW-T6-TRIAL-18					
Hop #	Freq. (GHz)	Hop #	Freq. (GHz)	Hop #	Freq. (GHz)	Hop #	Freq. (GHz)	Hop #	Freq. (GHz)	Hop #	Freq. (GHz)
1	5.589	35	5.406	69	5.275	1	5.573	35	5.528	69	5.591
2	5.309	36	5.289	70	5.352	2	5.352	36	5.641	70	5.342
3	5.373	37	5.483	71	5.686	3	5.592	37	5.618	71	5.408
4	5.301	38	5.605	72	5.541	4	5.459	38	5.554	72	5.692
5	5.542	39	5.302	73	5.379	5	5.272	39	5.391	73	5.322
6	5.411	40	5.474	74	5.336	6	5.434	40	5.303	74	5.489
7	5.438	41	5.552	75	5.396	7	5.624	41	5.324	75	5.645
8	5.285	42	5.673	76	5.388	8	5.543	42	5.648	76	5.664
9	5.348	43	5.256	77	5.442	9	5.682	43	5.722	77	5.49
10	5.681	44	5.607	78	5.42	10	5.625	44	5.629	78	5.627
11	5.555	45	5.472	79	5.512	11	5.305	45	5.455	79	5.532
12	5.415	46	5.655	80	5.713	12	5.381	46	5.3	80	5.598
13	5.423	47	5.276	81	5.642	13	5.331	47	5.712	81	5.29
14	5.292	48	5.267	82	5.531	14	5.566	48	5.581	82	5.585
15	5.405	49	5.51	83	5.65	15	5.33	49	5.273	83	5.288
16	5.637	50	5.282	84	5.254	16	5.586	50	5.365	84	5.418
17	5.599	51	5.374	85	5.669	17	5.296	51	5.384	85	5.535
18	5.648	52	5.721	86	5.366	18	5.511	52	5.516	86	5.633
19	5.312	53	5.705	87	5.278	19	5.679	53	5.468	87	5.43
20	5.67	54	5.659	88	5.324	20	5.431	54	5.676	88	5.531
21	5.449	55	5.622	89	5.663	21	5.545	55	5.364	89	5.487
22	5.534	56	5.588	90	5.703	22	5.681	56	5.533	90	5.593
23	5.444	57	5.667	91	5.457	23	5.552	57	5.711	91	5.698
24	5.494	58	5.691	92	5.701	24	5.583	58	5.308	92	5.695
25	5.631	59	5.475	93	5.32	25	5.704	59	5.31	93	5.652
26	5.354	60	5.489	94	5.508	26	5.279	60	5.287	94	5.587
27	5.424	61	5.504	95	5.265	27	5.588	61	5.261	95	5.341
28	5.627	62	5.378	96	5.603	28	5.477	62	5.671	96	5.282
29	5.699	63	5.273	97	5.668	29	5.411	63	5.47	97	5.314
30	5.514	64	5.529	98	5.678	30	5.534	64	5.466	98	5.708
31	5.657	65	5.63	99	5.628	31	5.415	65	5.277	99	5.454
32	5.517	66	5.568	100	5.518	32	5.326	66	5.302	100	5.424
33	5.526	67	5.277			33	5.608	67	5.264		
34	5.689	68	5.509			34	5.452	68	5.521		

NOTE: RED text = frequencies within the channel bandwidth (Fl and Fh).

5290MHZ-80MHZ BW-T6-TRIAL-19						5290MHZ-80MHZ BW-T6-TRIAL-20					
Hop #	Freq. (GHz)	Hop #	Freq. (GHz)	Hop #	Freq. (GHz)	Hop #	Freq. (GHz)	Hop #	Freq. (GHz)	Hop #	Freq. (GHz)
1	5.419	35	5.58	69	5.711	1	5.573	35	5.517	69	5.329
2	5.522	36	5.308	70	5.469	2	5.371	36	5.468	70	5.433
3	5.688	37	5.49	71	5.567	3	5.311	37	5.397	71	5.473
4	5.343	38	5.47	72	5.592	4	5.483	38	5.534	72	5.659
5	5.716	39	5.345	73	5.408	5	5.424	39	5.283	73	5.639
6	5.378	40	5.332	74	5.363	6	5.42	40	5.319	74	5.418
7	5.256	41	5.557	75	5.329	7	5.456	41	5.519	75	5.285
8	5.377	42	5.262	76	5.468	8	5.671	42	5.682	76	5.48
9	5.64	43	5.685	77	5.341	9	5.458	43	5.611	77	5.33
10	5.46	44	5.398	78	5.518	10	5.626	44	5.602	78	5.695
11	5.315	45	5.299	79	5.682	11	5.634	45	5.274	79	5.567
12	5.416	46	5.321	80	5.434	12	5.259	46	5.64	80	5.549
13	5.312	47	5.526	81	5.282	13	5.327	47	5.618	81	5.257
14	5.697	48	5.54	82	5.326	14	5.495	48	5.551	82	5.402
15	5.519	49	5.674	83	5.28	15	5.318	49	5.6	83	5.677
16	5.406	50	5.715	84	5.476	16	5.537	50	5.621	84	5.631
17	5.42	51	5.527	85	5.464	17	5.596	51	5.722	85	5.47
18	5.43	52	5.539	86	5.698	18	5.339	52	5.278	86	5.448
19	5.629	53	5.487	87	5.602	19	5.251	53	5.377	87	5.415
20	5.637	54	5.702	88	5.603	20	5.381	54	5.358	88	5.521
21	5.288	55	5.53	89	5.633	21	5.498	55	5.309	89	5.62
22	5.589	56	5.512	90	5.652	22	5.502	56	5.416	90	5.572
23	5.348	57	5.568	91	5.388	23	5.304	57	5.393	91	5.449
24	5.311	58	5.268	92	5.598	24	5.536	58	5.409	92	5.638
25	5.509	59	5.601	93	5.405	25	5.717	59	5.716	93	5.306
26	5.381	60	5.251	94	5.462	26	5.636	60	5.709	94	5.693
27	5.641	61	5.455	95	5.313	27	5.627	61	5.347	95	5.445
28	5.287	62	5.699	96	5.677	28	5.494	62	5.388	96	5.603
29	5.657	63	5.483	97	5.342	29	5.324	63	5.264	97	5.642
30	5.499	64	5.536	98	5.66	30	5.284	64	5.654	98	5.576
31	5.537	65	5.643	99	5.385	31	5.614	65	5.59	99	5.588
32	5.471	66	5.607	100	5.722	32	5.3	66	5.63	100	5.587
33	5.414	67	5.443			33	5.291	67	5.523		
34	5.276	68	5.433			34	5.705	68	5.539		

NOTE: RED text = frequencies within the channel bandwidth (Fl and Fh).

5290MHZ-80MHZ BW-T6-TRIAL-21						5290MHZ-80MHZ BW-T6-TRIAL-22					
Hop #	Freq. (GHz)	Hop #	Freq. (GHz)	Hop #	Freq. (GHz)	Hop #	Freq. (GHz)	Hop #	Freq. (GHz)	Hop #	Freq. (GHz)
1	5.421	35	5.449	69	5.258	1	5.438	35	5.531	69	5.477
2	5.46	36	5.381	70	5.529	2	5.257	36	5.297	70	5.523
3	5.408	37	5.662	71	5.564	3	5.668	37	5.387	71	5.432
4	5.648	38	5.446	72	5.586	4	5.485	38	5.566	72	5.575
5	5.514	39	5.424	73	5.657	5	5.406	39	5.454	73	5.709
6	5.306	40	5.396	74	5.498	6	5.291	40	5.569	74	5.629
7	5.569	41	5.47	75	5.578	7	5.411	41	5.335	75	5.534
8	5.418	42	5.68	76	5.354	8	5.276	42	5.285	76	5.413
9	5.264	43	5.256	77	5.496	9	5.571	43	5.625	77	5.593
10	5.517	44	5.492	78	5.515	10	5.444	44	5.46	78	5.37
11	5.369	45	5.251	79	5.572	11	5.598	45	5.712	79	5.494
12	5.545	46	5.619	80	5.383	12	5.312	46	5.55	80	5.416
13	5.594	47	5.325	81	5.361	13	5.542	47	5.521	81	5.684
14	5.419	48	5.591	82	5.59	14	5.511	48	5.592	82	5.701
15	5.72	49	5.663	83	5.261	15	5.458	49	5.698	83	5.428
16	5.43	50	5.329	84	5.612	16	5.295	50	5.487	84	5.479
17	5.583	51	5.252	85	5.392	17	5.325	51	5.681	85	5.7
18	5.563	52	5.54	86	5.263	18	5.518	52	5.336	86	5.435
19	5.391	53	5.365	87	5.337	19	5.319	53	5.418	87	5.307
20	5.613	54	5.284	88	5.53	20	5.635	54	5.673	88	5.713
21	5.279	55	5.269	89	5.39	21	5.394	55	5.642	89	5.633
22	5.393	56	5.406	90	5.63	22	5.551	56	5.634	90	5.573
23	5.327	57	5.677	91	5.348	23	5.682	57	5.62	91	5.492
24	5.524	58	5.653	92	5.288	24	5.509	58	5.503	92	5.562
25	5.25	59	5.321	93	5.463	25	5.342	59	5.301	93	5.253
26	5.706	60	5.275	94	5.589	26	5.473	60	5.516	94	5.436
27	5.711	61	5.362	95	5.368	27	5.293	61	5.578	95	5.665
28	5.388	62	5.7	96	5.469	28	5.72	62	5.67	96	5.382
29	5.523	63	5.505	97	5.432	29	5.273	63	5.363	97	5.528
30	5.271	64	5.457	98	5.364	30	5.356	64	5.587	98	5.623
31	5.716	65	5.712	99	5.547	31	5.722	65	5.425	99	5.401
32	5.527	66	5.616	100	5.548	32	5.358	66	5.395	100	5.599
33	5.639	67	5.328			33	5.499	67	5.508		
34	5.478	68	5.347			34	5.443	68	5.622		

NOTE: RED text = frequencies within the channel bandwidth (Fl and Fh).

5290MHZ-80MHZ BW-T6-TRIAL-23						5290MHZ-80MHZ BW-T6-TRIAL-24					
Hop #	Freq. (GHz)	Hop #	Freq. (GHz)	Hop #	Freq. (GHz)	Hop #	Freq. (GHz)	Hop #	Freq. (GHz)	Hop #	Freq. (GHz)
1	5.673	35	5.507	69	5.489	1	5.459	35	5.594	69	5.376
2	5.251	36	5.33	70	5.553	2	5.629	36	5.71	70	5.626
3	5.58	37	5.398	71	5.428	3	5.664	37	5.286	71	5.461
4	5.692	38	5.437	72	5.618	4	5.592	38	5.325	72	5.257
5	5.338	39	5.402	73	5.538	5	5.563	39	5.29	73	5.724
6	5.474	40	5.447	74	5.705	6	5.567	40	5.433	74	5.628
7	5.358	41	5.383	75	5.571	7	5.44	41	5.457	75	5.438
8	5.688	42	5.411	76	5.381	8	5.65	42	5.637	76	5.717
9	5.377	43	5.541	77	5.532	9	5.34	43	5.449	77	5.686
10	5.423	44	5.326	78	5.581	10	5.291	44	5.307	78	5.559
11	5.547	45	5.59	79	5.431	11	5.591	45	5.45	79	5.368
12	5.297	46	5.373	80	5.395	12	5.554	46	5.435	80	5.283
13	5.359	47	5.261	81	5.439	13	5.299	47	5.267	81	5.498
14	5.596	48	5.657	82	5.365	14	5.564	48	5.647	82	5.405
15	5.368	49	5.451	83	5.548	15	5.471	49	5.662	83	5.709
16	5.695	50	5.496	84	5.279	16	5.489	50	5.451	84	5.363
17	5.455	51	5.385	85	5.322	17	5.723	51	5.396	85	5.456
18	5.555	52	5.337	86	5.698	18	5.537	52	5.314	86	5.26
19	5.327	53	5.332	87	5.491	19	5.687	53	5.448	87	5.466
20	5.622	54	5.54	88	5.262	20	5.48	54	5.304	88	5.377
21	5.312	55	5.483	89	5.653	21	5.256	55	5.615	89	5.684
22	5.709	56	5.669	90	5.7	22	5.349	56	5.482	90	5.491
23	5.517	57	5.539	91	5.302	23	5.351	57	5.434	91	5.571
24	5.573	58	5.466	92	5.497	24	5.391	58	5.289	92	5.295
25	5.285	59	5.504	93	5.699	25	5.36	59	5.356	93	5.521
26	5.452	60	5.434	94	5.721	26	5.355	60	5.718	94	5.546
27	5.578	61	5.369	95	5.522	27	5.397	61	5.495	95	5.309
28	5.635	62	5.468	96	5.616	28	5.577	62	5.467	96	5.56
29	5.367	63	5.329	97	5.609	29	5.641	63	5.516	97	5.588
30	5.445	64	5.561	98	5.39	30	5.6	64	5.548	98	5.513
31	5.436	65	5.379	99	5.703	31	5.407	65	5.713	99	5.418
32	5.582	66	5.493	100	5.448	32	5.603	66	5.671	100	5.465
33	5.528	67	5.631			33	5.695	67	5.719		
34	5.318	68	5.562			34	5.42	68	5.463		

NOTE: RED text = frequencies within the channel bandwidth (Fl and Fh).

5290MHZ-80MHZ BW-T6-TRIAL-25						5290MHZ-80MHZ BW-T6-TRIAL-26					
Hop #	Freq. (GHz)	Hop #	Freq. (GHz)	Hop #	Freq. (GHz)	Hop #	Freq. (GHz)	Hop #	Freq. (GHz)	Hop #	Freq. (GHz)
1	5.498	35	5.475	69	5.288	1	5.412	35	5.251	69	5.263
2	5.258	36	5.299	70	5.276	2	5.368	36	5.408	70	5.638
3	5.624	37	5.446	71	5.601	3	5.715	37	5.714	71	5.289
4	5.514	38	5.317	72	5.259	4	5.288	38	5.376	72	5.304
5	5.49	39	5.386	73	5.443	5	5.641	39	5.31	73	5.296
6	5.546	40	5.516	74	5.459	6	5.42	40	5.34	74	5.437
7	5.594	41	5.305	75	5.599	7	5.471	41	5.505	75	5.441
8	5.549	42	5.613	76	5.603	8	5.386	42	5.3	76	5.696
9	5.45	43	5.313	77	5.253	9	5.666	43	5.277	77	5.573
10	5.689	44	5.576	78	5.51	10	5.676	44	5.272	78	5.307
11	5.477	45	5.545	79	5.427	11	5.269	45	5.663	79	5.333
12	5.301	46	5.682	80	5.614	12	5.499	46	5.48	80	5.33
13	5.488	47	5.718	81	5.256	13	5.274	47	5.668	81	5.454
14	5.293	48	5.419	82	5.379	14	5.54	48	5.543	82	5.281
15	5.41	49	5.283	83	5.395	15	5.585	49	5.658	83	5.616
16	5.417	50	5.686	84	5.483	16	5.372	50	5.698	84	5.57
17	5.267	51	5.714	85	5.666	17	5.672	51	5.432	85	5.294
18	5.692	52	5.368	86	5.385	18	5.71	52	5.387	86	5.47
19	5.52	53	5.62	87	5.713	19	5.361	53	5.542	87	5.254
20	5.326	54	5.358	88	5.414	20	5.334	54	5.578	88	5.406
21	5.717	55	5.635	89	5.664	21	5.62	55	5.58	89	5.614
22	5.532	56	5.375	90	5.312	22	5.568	56	5.492	90	5.68
23	5.694	57	5.542	91	5.711	23	5.531	57	5.278	91	5.52
24	5.34	58	5.361	92	5.537	24	5.468	58	5.319	92	5.723
25	5.275	59	5.573	93	5.273	25	5.671	59	5.496	93	5.682
26	5.584	60	5.281	94	5.643	26	5.417	60	5.494	94	5.469
27	5.629	61	5.57	95	5.479	27	5.407	61	5.276	95	5.391
28	5.529	62	5.36	96	5.418	28	5.61	62	5.624	96	5.615
29	5.572	63	5.64	97	5.575	29	5.513	63	5.337	97	5.314
30	5.58	64	5.604	98	5.341	30	5.258	64	5.455	98	5.365
31	5.303	65	5.691	99	5.706	31	5.544	65	5.592	99	5.678
32	5.699	66	5.407	100	5.272	32	5.478	66	5.435	100	5.55
33	5.314	67	5.255			33	5.299	67	5.611		
34	5.519	68	5.54			34	5.378	68	5.44		

NOTE: RED text = frequencies within the channel bandwidth (Fl and Fh).

5290MHZ-80MHZ BW-T6-TRIAL-27						5290MHZ-80MHZ BW-T6-TRIAL-28					
Hop #	Freq. (GHz)	Hop #	Freq. (GHz)	Hop #	Freq. (GHz)	Hop #	Freq. (GHz)	Hop #	Freq. (GHz)	Hop #	Freq. (GHz)
1	5.282	35	5.611	69	5.459	1	5.599	35	5.538	69	5.508
2	5.638	36	5.549	70	5.3	2	5.512	36	5.408	70	5.587
3	5.4	37	5.468	71	5.68	3	5.564	37	5.435	71	5.475
4	5.619	38	5.556	72	5.601	4	5.666	38	5.638	72	5.49
5	5.461	39	5.717	73	5.591	5	5.544	39	5.509	73	5.446
6	5.457	40	5.454	74	5.345	6	5.296	40	5.289	74	5.65
7	5.505	41	5.451	75	5.543	7	5.268	41	5.405	75	5.52
8	5.349	42	5.415	76	5.485	8	5.539	42	5.349	76	5.603
9	5.375	43	5.688	77	5.516	9	5.362	43	5.618	77	5.672
10	5.691	44	5.319	78	5.316	10	5.306	44	5.428	78	5.279
11	5.408	45	5.458	79	5.498	11	5.378	45	5.518	79	5.482
12	5.367	46	5.416	80	5.685	12	5.519	46	5.473	80	5.392
13	5.493	47	5.676	81	5.721	13	5.256	47	5.617	81	5.397
14	5.588	48	5.677	82	5.489	14	5.678	48	5.63	82	5.68
15	5.336	49	5.686	83	5.672	15	5.637	49	5.545	83	5.463
16	5.51	50	5.669	84	5.445	16	5.712	50	5.636	84	5.343
17	5.317	51	5.62	85	5.304	17	5.412	51	5.266	85	5.55
18	5.572	52	5.452	86	5.299	18	5.687	52	5.635	86	5.578
19	5.511	53	5.568	87	5.384	19	5.286	53	5.325	87	5.547
20	5.291	54	5.399	88	5.703	20	5.604	54	5.303	88	5.348
21	5.716	55	5.273	89	5.413	21	5.589	55	5.671	89	5.616
22	5.501	56	5.398	90	5.363	22	5.476	56	5.36	90	5.654
23	5.361	57	5.354	91	5.484	23	5.548	57	5.308	91	5.309
24	5.671	58	5.542	92	5.427	24	5.425	58	5.495	92	5.364
25	5.563	59	5.313	93	5.58	25	5.338	59	5.384	93	5.592
26	5.657	60	5.334	94	5.49	26	5.3	60	5.312	94	5.7
27	5.567	61	5.654	95	5.333	27	5.311	61	5.719	95	5.651
28	5.481	62	5.687	96	5.477	28	5.387	62	5.567	96	5.464
29	5.378	63	5.586	97	5.429	29	5.69	63	5.656	97	5.468
30	5.658	64	5.589	98	5.513	30	5.566	64	5.625	98	5.252
31	5.346	65	5.641	99	5.29	31	5.263	65	5.59	99	5.292
32	5.575	66	5.298	100	5.45	32	5.601	66	5.622	100	5.259
33	5.497	67	5.661			33	5.299	67	5.659		
34	5.397	68	5.578			34	5.374	68	5.602		

NOTE: RED text = frequencies within the channel bandwidth (Fl and Fh).

5290MHZ-80MHZ BW-T6-TRIAL-29						5290MHZ-80MHZ BW-T6-TRIAL-30					
Hop #	Freq. (GHz)	Hop #	Freq. (GHz)	Hop #	Freq. (GHz)	Hop #	Freq. (GHz)	Hop #	Freq. (GHz)	Hop #	Freq. (GHz)
1	5.582	35	5.455	69	5.498	1	5.385	35	5.305	69	5.393
2	5.284	36	5.546	70	5.585	2	5.532	36	5.544	70	5.409
3	5.352	37	5.459	71	5.288	3	5.706	37	5.596	71	5.42
4	5.479	38	5.308	72	5.287	4	5.283	38	5.556	72	5.58
5	5.26	39	5.507	73	5.42	5	5.353	39	5.555	73	5.276
6	5.63	40	5.524	74	5.345	6	5.607	40	5.267	74	5.551
7	5.396	41	5.702	75	5.675	7	5.286	41	5.66	75	5.358
8	5.525	42	5.678	76	5.718	8	5.468	42	5.589	76	5.253
9	5.432	43	5.281	77	5.589	9	5.577	43	5.427	77	5.408
10	5.403	44	5.532	78	5.667	10	5.721	44	5.666	78	5.678
11	5.708	45	5.438	79	5.61	11	5.259	45	5.557	79	5.473
12	5.616	46	5.446	80	5.716	12	5.424	46	5.561	80	5.697
13	5.713	47	5.644	81	5.456	13	5.51	47	5.588	81	5.486
14	5.554	48	5.415	82	5.53	14	5.266	48	5.552	82	5.541
15	5.677	49	5.398	83	5.369	15	5.45	49	5.516	83	5.656
16	5.649	50	5.255	84	5.645	16	5.26	50	5.288	84	5.587
17	5.466	51	5.65	85	5.29	17	5.333	51	5.362	85	5.331
18	5.548	52	5.334	86	5.322	18	5.61	52	5.451	86	5.528
19	5.622	53	5.606	87	5.318	19	5.265	53	5.644	87	5.524
20	5.311	54	5.297	88	5.648	20	5.503	54	5.347	88	5.67
21	5.717	55	5.306	89	5.413	21	5.296	55	5.367	89	5.49
22	5.261	56	5.6	90	5.583	22	5.702	56	5.435	90	5.298
23	5.272	57	5.604	91	5.666	23	5.476	57	5.715	91	5.438
24	5.271	58	5.562	92	5.368	24	5.695	58	5.522	92	5.512
25	5.596	59	5.269	93	5.434	25	5.521	59	5.311	93	5.307
26	5.636	60	5.482	94	5.37	26	5.457	60	5.519	94	5.71
27	5.5	61	5.659	95	5.618	27	5.531	61	5.641	95	5.653
28	5.289	62	5.337	96	5.526	28	5.623	62	5.402	96	5.673
29	5.537	63	5.709	97	5.286	29	5.359	63	5.458	97	5.356
30	5.47	64	5.541	98	5.491	30	5.675	64	5.479	98	5.366
31	5.51	65	5.668	99	5.283	31	5.581	65	5.621	99	5.559
32	5.57	66	5.422	100	5.597	32	5.594	66	5.481	100	5.335
33	5.637	67	5.493			33	5.372	67	5.448		
34	5.314	68	5.265			34	5.649	68	5.454		

NOTE: RED text = frequencies within the channel bandwidth (Fl and Fh).

END OF REPORT