ALINKET Alinket wireless controller

ALXC12B User Manual

Version 2.0

September 20, 2016

E-mail: sales@alinket.com

Copyright

Trademarks

ALXC12B is a registered trademark of Alinket Electronic Technologies Corp. Alinket is a registered trademark of Alinket Technologies Corp. Other products and company names mentioned here in may be the trademarks of their respective owners.

Revision History

Date(M/D/Y)	Revision Content	Revision By	Version
5/18/2016	Initialization Version	Shi Qi	1.0
9/20/2016	Change to New Template	Nigel Ding	2.0

List of Contents

List of Figures

List of Tables

1. Introduction

1. 1 Overview

Alinket ALXC12B , which has Wi-Fi 802.11b/g/n and Bluetooth 4.1 functionalities, is a portfolio of low-powered, self-contained, embedded wireless module solutions that address the connectivity demands of machine to machine applications.

ALXC12B supports a U.FL connector which provides the flexibility for customer to pick up its own proper external antenna.

Table 1 Product

ALXC12B	Wi-Fi 2.4GHz + BT 4.1 IoT Controller, External Antenna, Support U.FL

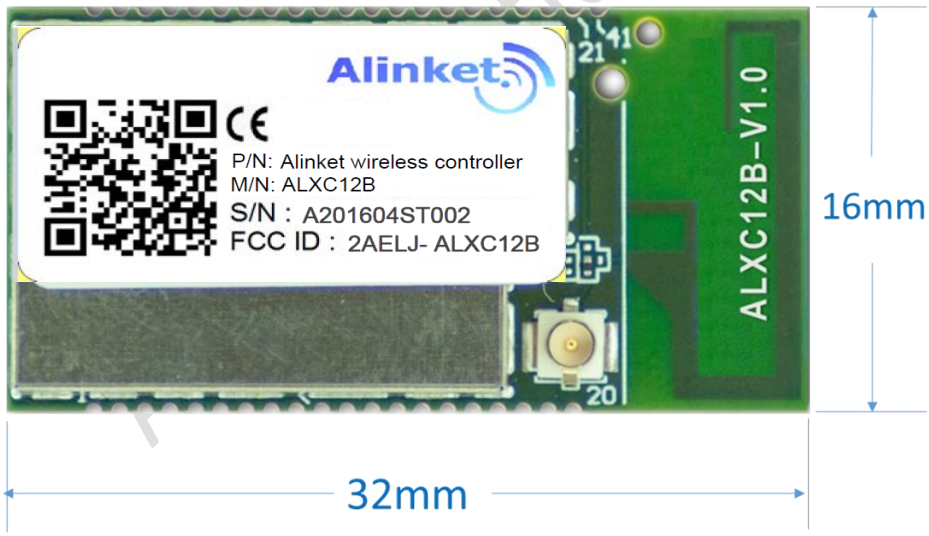

Figure 1 Top View

1. 2 Hardware Architecture

ALXC12B integrates an ARM® 32-bit Cortex®-M4 micro-controller, a Wi-Fi 2.4GHz & Bluetooth 4.1 SoC, an On-Board SPI Flash into the small factor module.

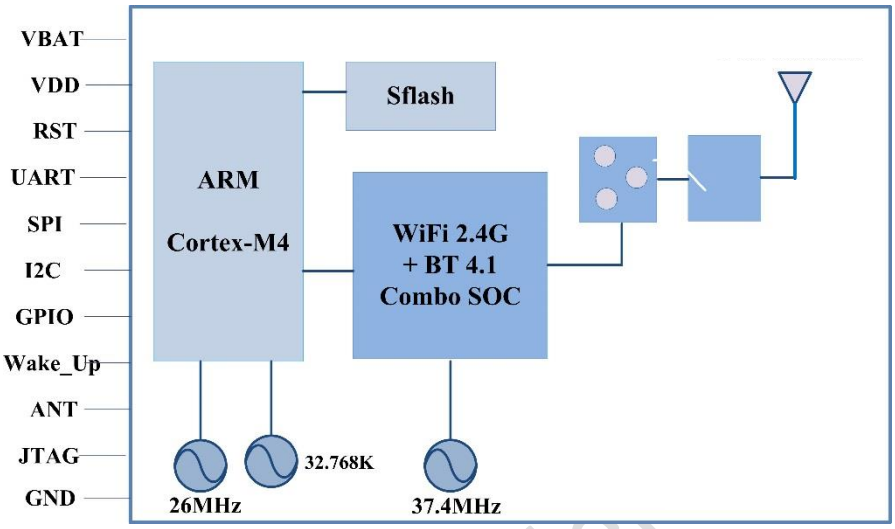

Figure 2 Block Diagram

1. 3 Interface and Peripherals

The controller family includes various different host interfaces to communicate with Host CPU. Below table lists the basic descriptions of the MCU, Wi-Fi SoC and the interfaces.

Table 2 MCU and Interfaces

Model		ALXC12B
Wi-Fi Technology		IEEE 802.11 b/g/n, Wi-Fi 2.4G
Frequency Band – Wi-Fi		2,400MHz ~ 2,500MHz
Bluetooth Technology		Bluetooth 4.1 (BR/EDR/LE)
Frequency Band – BT		2,402 MHz ~ 2,480 MHz
MCU	Core	ARM® Cortex®- M4 @100MHz
	RAM	128KB
	ROM	512KB
Flash (On-Board)		1MB
Host Interfaces	UART x 1	Up to 6.25Mbps
	SPI x 1	50MHz, multiplexing with USB
Peripherals	I2C x 1	Support 100KHz, 400KHz & 1MHz
	ADC x 6	12bit, 16 channel, multiplexing with GPIO
	GPIO x 16	Max., multiplexing with interface & peripherals

Note: SPI, I2C interfaces are for customized projects only, not for standard product, please contact your local Alinket sales office or distributors for more information.

1. 4 Physical Dimensions

1.4.1 Mechanical Size

Table 3 Mechanical Dimensions

Parameter	Typical	Units
Dimensions (L x W x H)	32 x 16 x 3.1	mm
Dimensions tolerances (L x W x H)	±0.2	mm

1.4.2 PCB Footprint

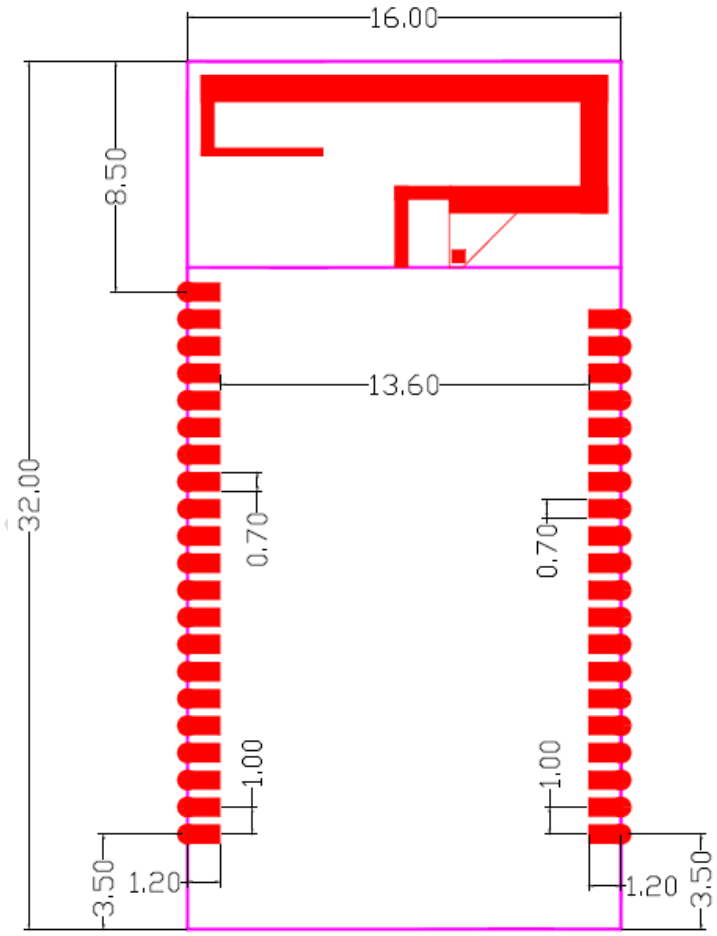

Figure 3 Pad Dimension (Top View)

1. 5 PIN Assignment

ALXC12B PIN ball maps are described as follows.

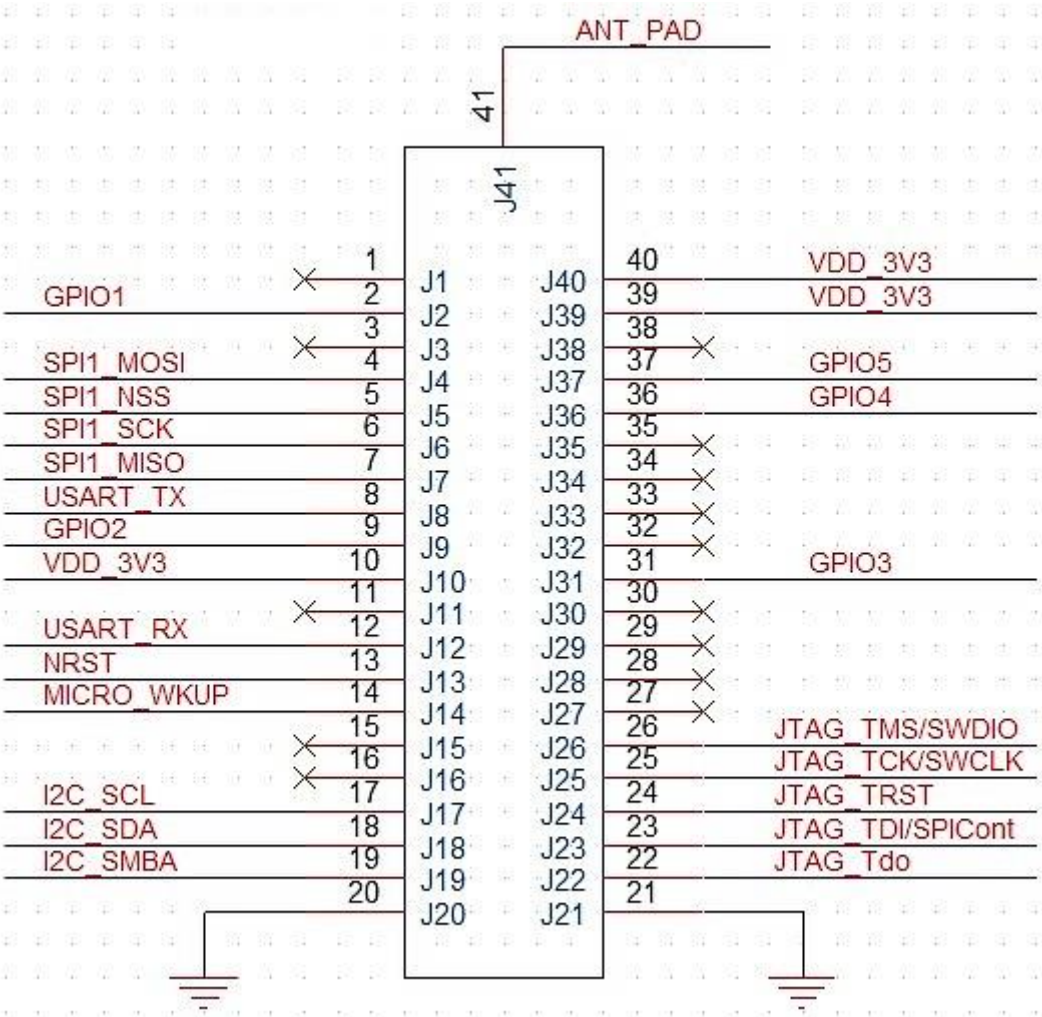

Figure 4 Ball Maps

1. 6 PIN Description

Table 4 Pin Descriptions

Pins	Type	Name Main function	Alternate functions	PIN connection (when not using)
1		NC		
2	I/O	GPIO1	GPIO	floating
3				
4	I/O	SPI1_MOSI	GPIO	floating

5	I/O	SPI1_NSS	GPIO/ADC	floating
6	I/O	SPI1_SCK	GPIO	floating
7	I/O	SPI1_MISO	GPIO	floating
8	I/O	USART_TX	GPIO/ADC	floating
9	I/O	GPIO2	ADC	floating
10	V	VBAT	3.3V	
11		NC		
12	I/O	USART_RX	GPIO/ADC	floating
13	I	NRST	Active-low reset input	PULL UP
14	I	MICRO_WKUP	Wake up	floating
15		NC		
16		NC		
17	I/O	I2C_SCL	GPIO	floating
18	I/O	I2C_SDA	GPIO	floating
19	I/O	I2C_SMBA	GPIO	floating
20	S	GND		
21	S	GND		
22	I/O	JTAG_Tdo	GPIO	floating
23	I/O	JTAG_TDI/SPICont	GPIO	floating
24		JTAG_TRST	floating	
25	I/O	JTAG_TCK/SWCLK	JTCK-SWCLK	floating
26	I/O	JTAG_TMS/SWDIO	JTCK-SWDIO	floating
27		NC		
28		NC		
29		NC		
30		NC		
31	I/O	GPIO3	GPIO	floating
32		NC		
33		NC		
34		NC		
35		NC		
36	I/O	GPIO4	ADC	floating
37	I/O	GPIO5	ADC	floating
38		NC		
39	V	VDD_3V3	3.3V	
40	V	VDD_3V3	3.3V	
41	ANT	ANT_PAD	RF OUTPUT	floating

2. Hardware Design Guide

2. 1 Smallest System

The ALXC12B embedded a Cortex-M4 MCU, Wi-Fi + BT combo SoC, Flash memory and an on-board or external antenna, when it's power on and pulled up the 10K Ohm connected to NRST (PIN13), it can start to work, shown as below Figure.

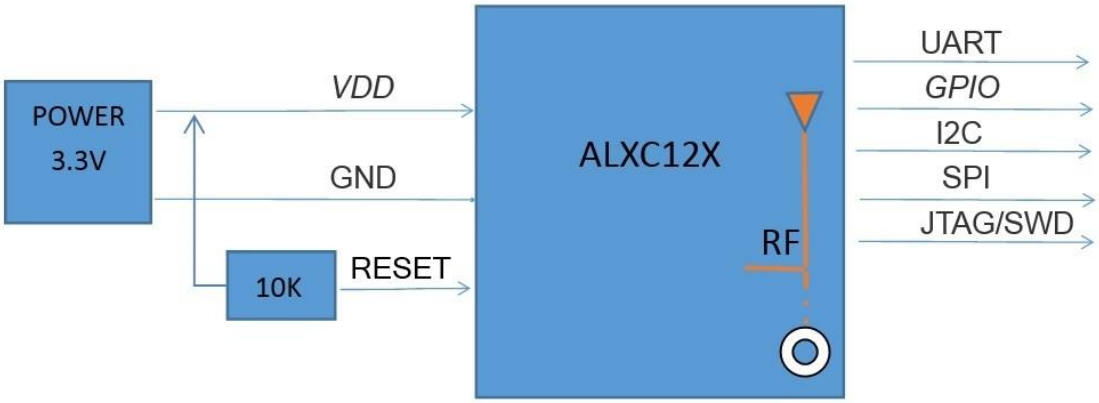

Figure 5 Smallest System

2. 2 Typical Application

ALXC12B provides multiple host interface and peripheral interfaces such as UART, SPI, I2C and GPIO. A typical application is ALXC12B to be connected by a customer host through UART or SPI interface and GPIO for status or application controls. Then the ALXC12B device can connect and communicate with an AP/router or Bluetooth devices and transmit or receive data with a server.

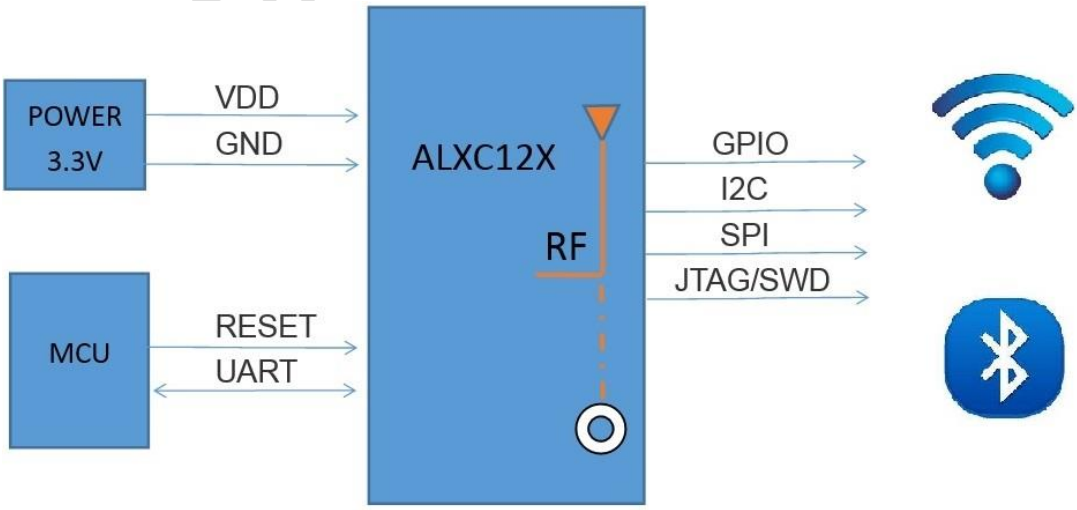

Figure 6 Typical Application

2. 3 Power

ALXC12B module default power is 3.3V, reference power circuit shown below. Please note that the power ripple should be controlled within 50mV.

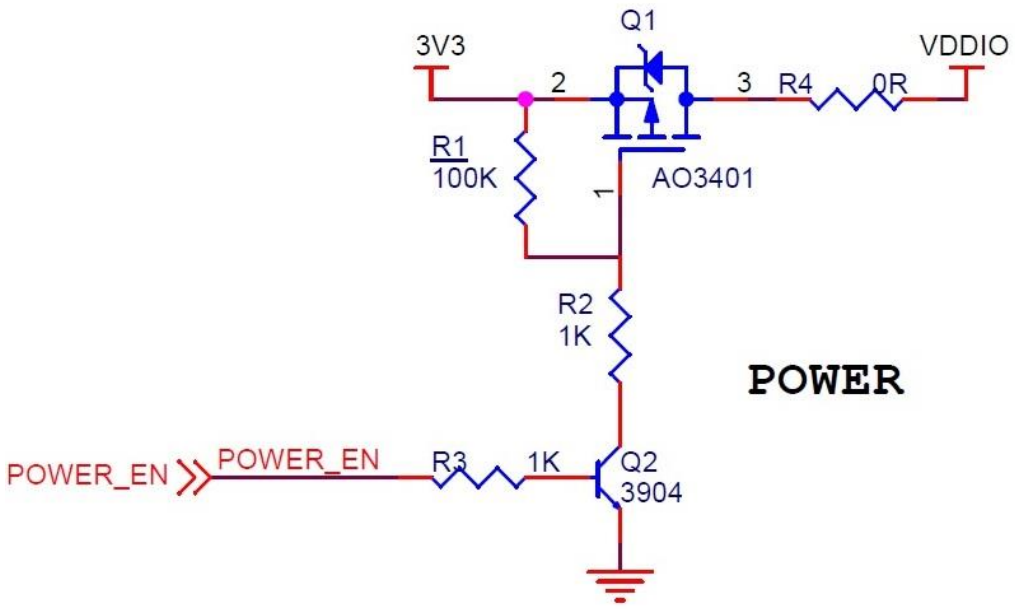

Figure 7 Power Circuit

The power access to the VDDIO pin needs a filtering circuit shown below.

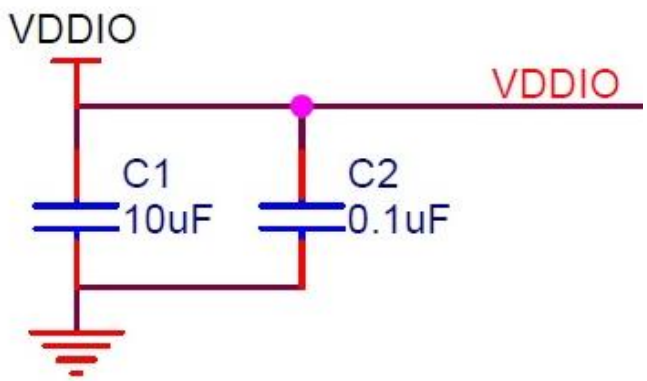

Figure 8 VDDIO Circuit

2. 4 UART Interface

ALXC12B has one standard UART with a maximum data rate up to 6 Mbps. The default baud rate is 115,200 which can be configured by Alinket ACM (Alinket Control Messages) command.

The PINs for UART interface is: UART_Tx/PIN 8, UART_Rx/PIN 12, its reference circuit to a host MCU is shown below.

Figure 9 PUART Circuit

2. 5 SPI Interface

The ALXC12B has one independent SPI interface. It can be either a master or a slave. It can communicate at up to minimum 25 Mbps to 50MHz.

The PINs for SPI interface is: SPI_MOSI/PIN 4, SPI_NSS/PIN 5, SPI_CLK/PIN 6, SPI_MISO/PIN 7, SPI reference circuit to MCU is shown below.

Figure 10 SPI Circuit

2. 6 I2C Interface

I2C bus interfaces can operate in both master and slave modes. It can support the standard (up to 100 kHz) and fast (up to 400 kHz) modes. Its frequency can be increased up to 1 MHz.

The PINs for I2C interface is I2C_SDA/PIN 5, I2C_CSL/PIN 6. Reference circuit is shown below.

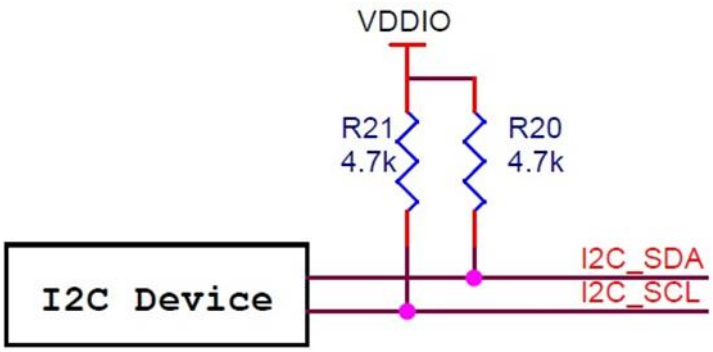

Figure 11 I2C Circuit

2. 7 ADC & GPIO

ALXC12B has 6 ADC and 16 GPIO interfaces. All of GPIO ports support programmable pull-up and pull-down resistors and can be directly connected. The ADC and GPIO are multiplexed & list below. Table 5 GPIO List

No.	Pin#	Main function	Alternate functions
1	2	GPIO1	GPIO
2	4	SPI1_MOSI	GPIO
3	5	SPI1_NSS	GPIO/ADC
4	6	SPI_SLK	GPIO
5	7	SPI_MISO	GPIO
6	8	USART_TX	GPIO/ADC
7	9	GPIO2	ADC
8	12	USART_RX	GPIO/ADC
9	17	I2C_SCL	GPIO
10	18	I2C_SDA	GPIO
11	19	I2C_SMBA	GPIO
12	22	JTAG_Tdo	GPIO
13	23	JTAG_TDI/SPICont	GPIO
14	31	GPIO3	GPIO
15	36	GPIO4	ADC
16	37	GPIO5	ADC

2. 8 NRST

Under some circumstance, ALXC12B need to be reset to recovery its system. An external signal needs to be provide to the NRST of ALXC12B. NRST (PIN 13) reference circuit is shown below.

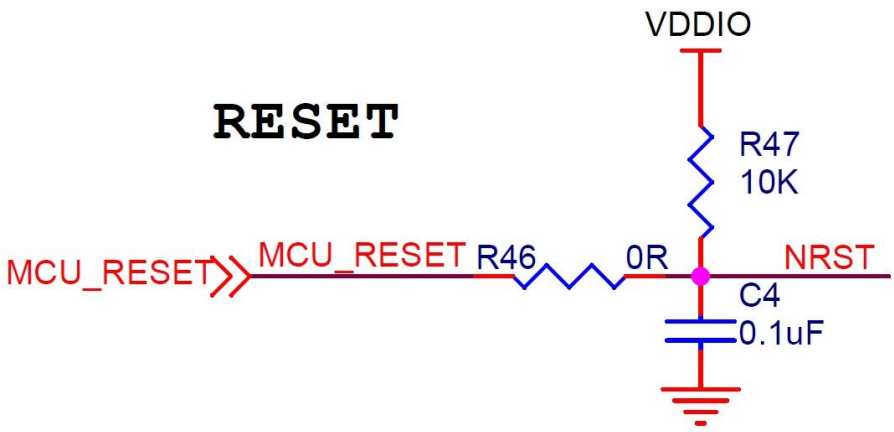

Figure 12 NRST

3. Software Design Guide

ALXC12B support two work modes: UART Transparent Mode and ACM Mode.

3. 1 UART Transparent Mode

ALXC12B supports serial interface transparent transmission mode when Bluetooth is not used. The benefits of this mode are a plug and play serial data port, and reduced user complexity. In this mode, the user should only configure the necessary parameters. After power on, the module can automatically connect to the default master.

If Bluetooth is used, only ACM mode is supported.

3. 2 ACM Mode

ACM (Alinket Controller Message) is a message system and protocol for the communications between customer host MCU and Alinket IoT controllers. It is developed by Alinket itself and is applicable to all Alinket controllers.

ACM system works with the host control interfaces between customer host MCU and Alinket controllers. The messages include host control commands, controller command response, and alarm events from Alinket controller as well.

Detailed message definition, the implementation of massage Flow Control and Power Save functions can be found in documents of *Alinket Controller Message Specification, Alinket Host Control Interface Guide* (* Please contact your local Alinket sales office or distributors to get the related documents).

4. Test & Debug Manual

4. 1 Preparation

4.1.1 Tools

4.1.1.1 Hardware Tools

Hardware tools include ALXC12B module, EVK, PC, USB-to-Serial converter (TTL interface), Wi-Fi AP, Wi-Fi AC.

Table 6 Hardware Tools

No.	Tools	Note	Quantity
1	PC	Used for send/receive commands, connect the module, OS: Win 8.0 or above	1
2	ALXC12B EVK	Perform Wi-Fi & Bluetooth functions	2
3	Dupont Line	Connect from FT232 USB – UART Board to ALXC12BEVK	1
4	FT232 USB to UART Board	USB-to-Serial converter (TTL interface)	2
5	AP	Wi-Fi AP (Access Point)	2
6	AC	Wi-Fi AC (AP Controller)	1

4.1.1.2 Software Tools

Software tools include PC (Win 8.0 or above), Serial Debugger Tool (UARTAssist), ACMTH, Alinket SocketRunner, Flashlink & RFCOMM.

Table 7 Software Tools

No.	Tools	Note	Quantity
1	ACMTH	Alinket Controller Message Test Host	/
2	UartAssist	UART send/receive commands tool	/
3	SocketRunner	Simulator a Server on PC	/
4	Flashlink	Network configuration (AP and Server)	/
5	RFCOMM	Alinket RFCOMM Test Host, it can send and receive data between BT module and BT of PC	/

4.1.2 Evaluation Kit

Alinket provides the evaluation kit to let users to familiarize module and develop prototypes and dedicated software. Evaluation Kit normally work with a USB to UART convertor, which provide connection between PC and the EVK.

4.1.2.1 ALXC12B EVK

ALXC12B EVK is shown below with its major function bloacks.

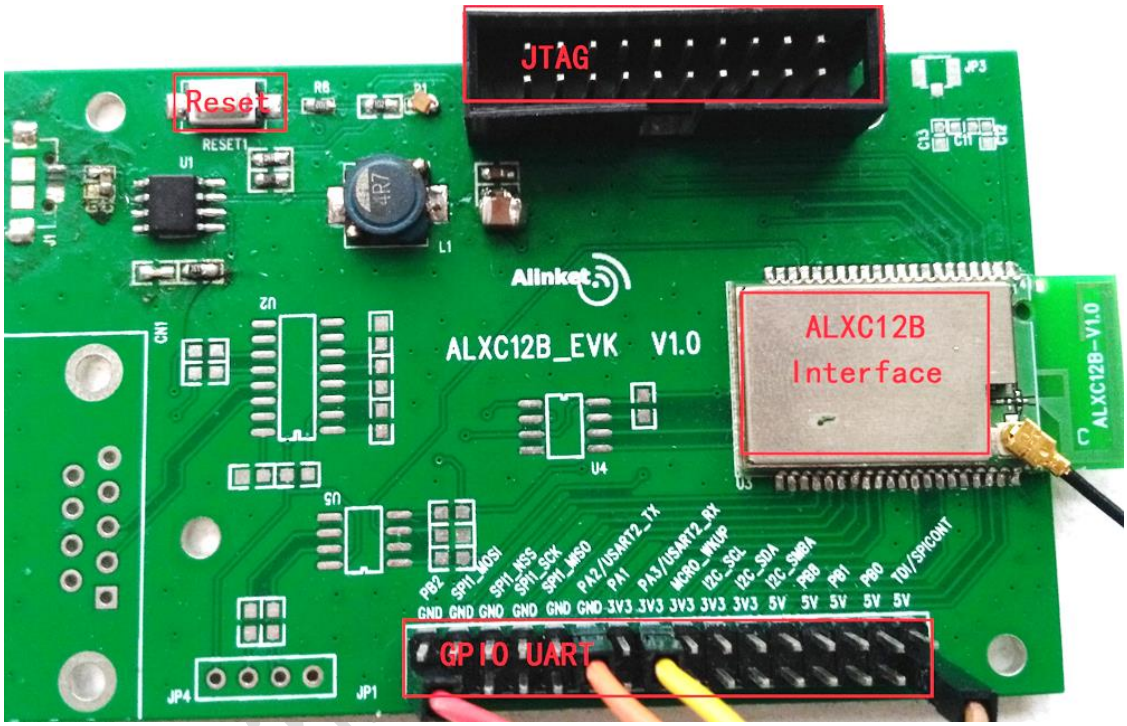

Figure 14 ALXC12B EVK

- One micro-USB connector supporting USB interfaces and power supply (+5V)
- Direct +3.3V DC power supply via PINs
- A reset button to reset EVK
- Two Key buttons to test GPIO function
- Two LEDs to indicate two GPIO status
- A JTAG debug interface connector
- A pad of the headers to access the I/O pins of ALXC12B
- An ALXC12B controlller

4.1.2.2 USB to UART Convertor

The convertor is used for connecting between the EVK with PC. Its PIN definition is described below.

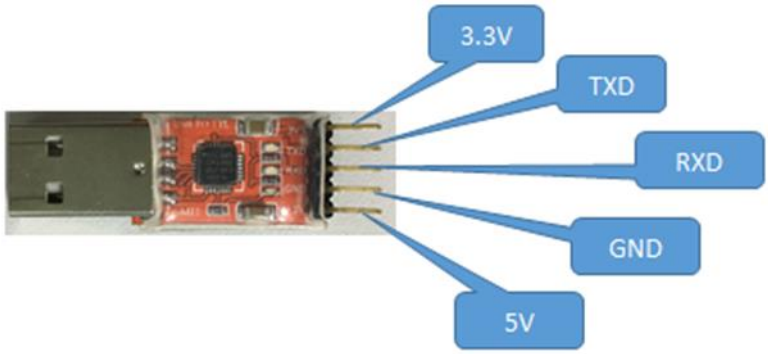

Figure 15 Without HW Flow Control

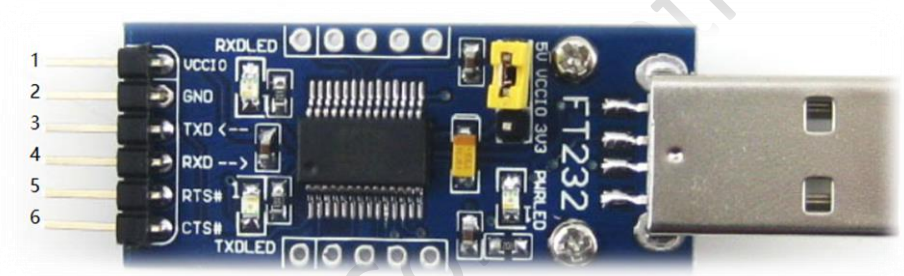

Figure 16 With HW Flow Control

Table 8 USB – UART Convertor PIN

Pin#	Function
1	VCCIO
2	GND
3	TXD
4	RXD
5	RTS
6	CTS

4.1.3 Set Up

Connect the EVK and PC (Host) with USB-to-Serial converter.

4.1.3.1 Connection Diagram

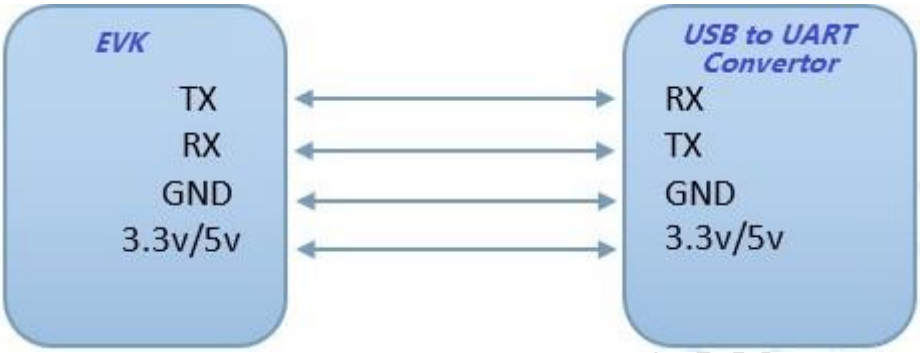

Figure 17 Connection Diagram – Without HW Flow Control

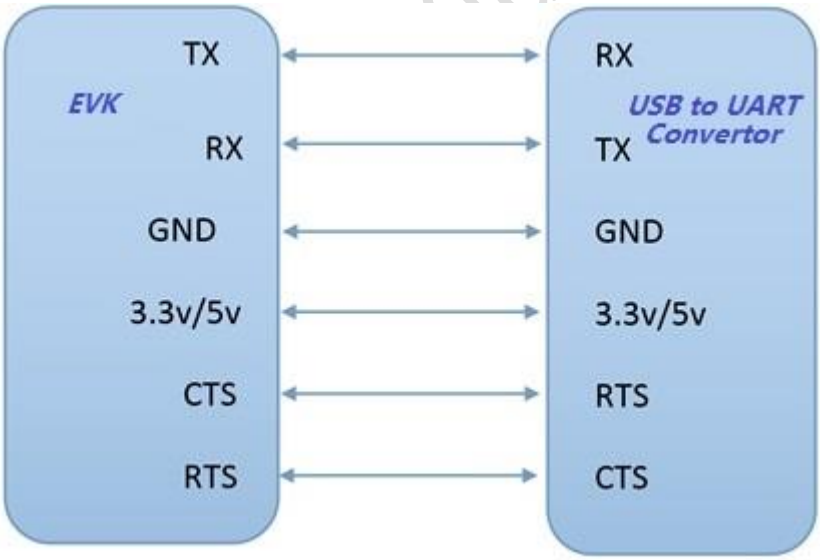

Figure 18 Connection Diagram – With HW Flow Control

4.1.3.2 Connection Map

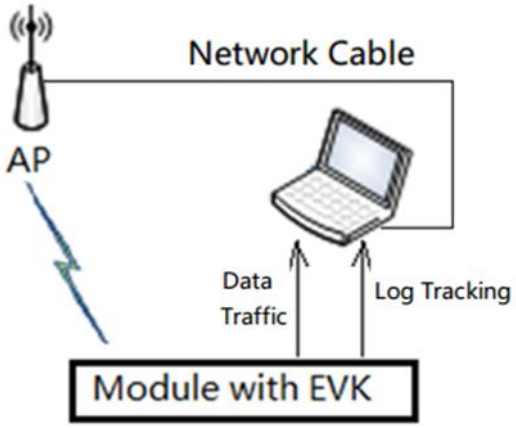

Figure 19 Connection Map – Normal Case

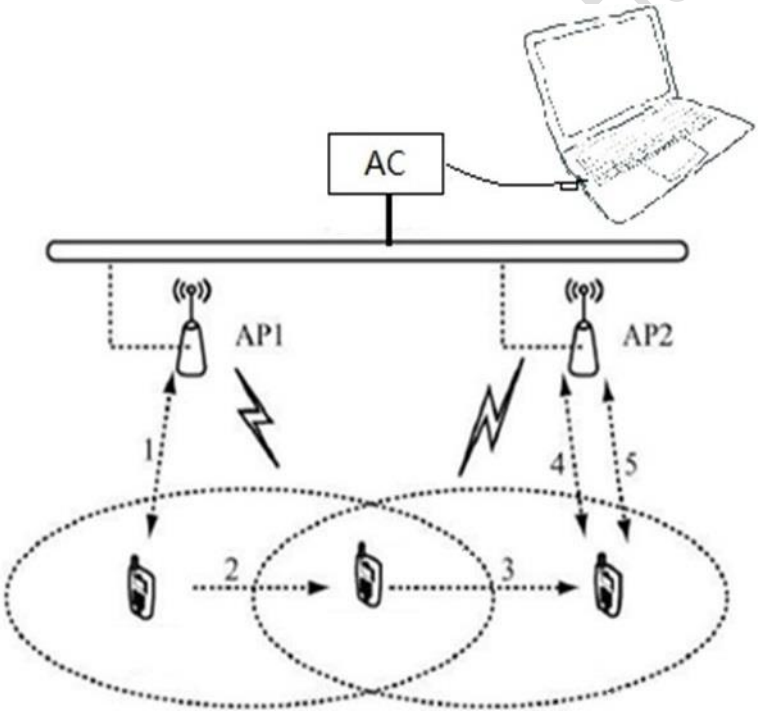

Figure 20 Connection Map – Roaming

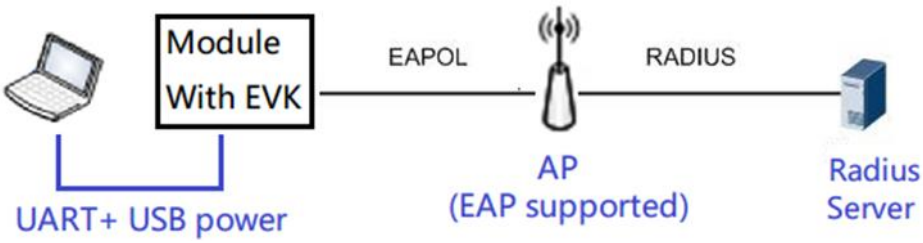

Figure 21 Connection Map - EAP

4. 2 Process Introduction

4.2.1 Wi-Fi Transparent Mode

ALXC12B supports serial interface transparent transmission mode. Under transparent mode, users need only to configure the necessary parameters. After power on, the module can be connected to the master. TCP & UDP is common protocol for network connections.

4.2.1.1 TCP

Step1. Set up a server on a computer attached to an AP.

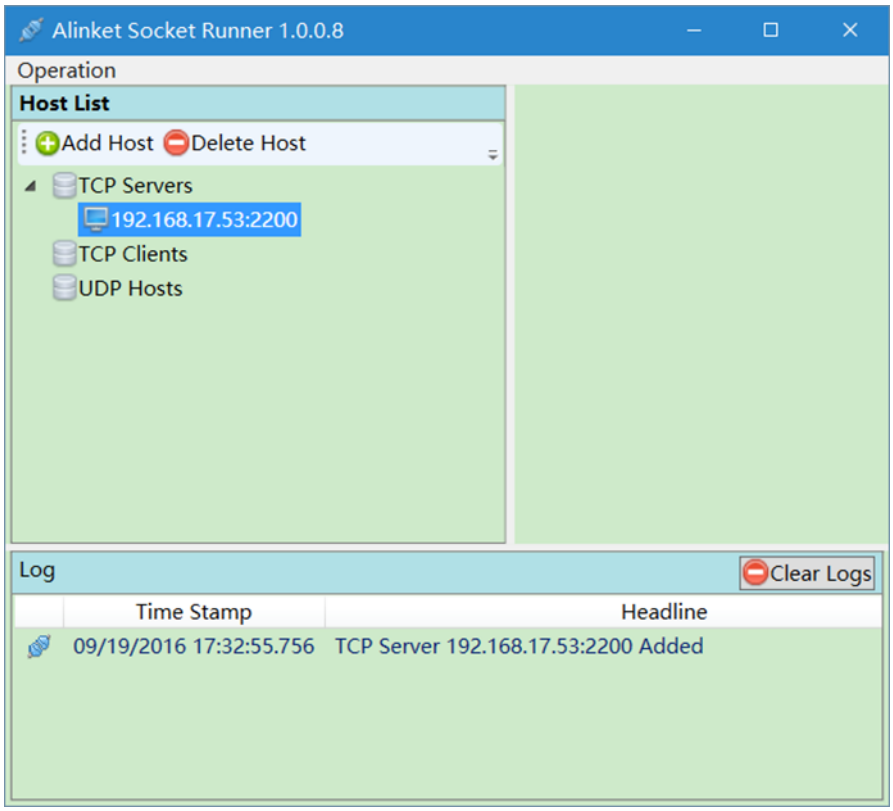

Figure 22 Set up a Server

Step2. Install Alinket Flashlink software on a mobile device, which can join the same AP as the computer.

Step3. Network configuration by using Flashlink software as shown below.

Figure 23 Network Configuration – Flashlink

Step4. WIFI SSID is the name of the AP that the computer attached to.

Step5. Server URL is the server IP and port number.

Step6. Stop/Start button will launch the “Flashlink” function.

Step7. When configuration is finished, click “Start” button, if flash link is successful, the module will automatically configured.

Step8. After the module connects to the server successfully, message can be exchanged between the computer and the module as shown in below figure.

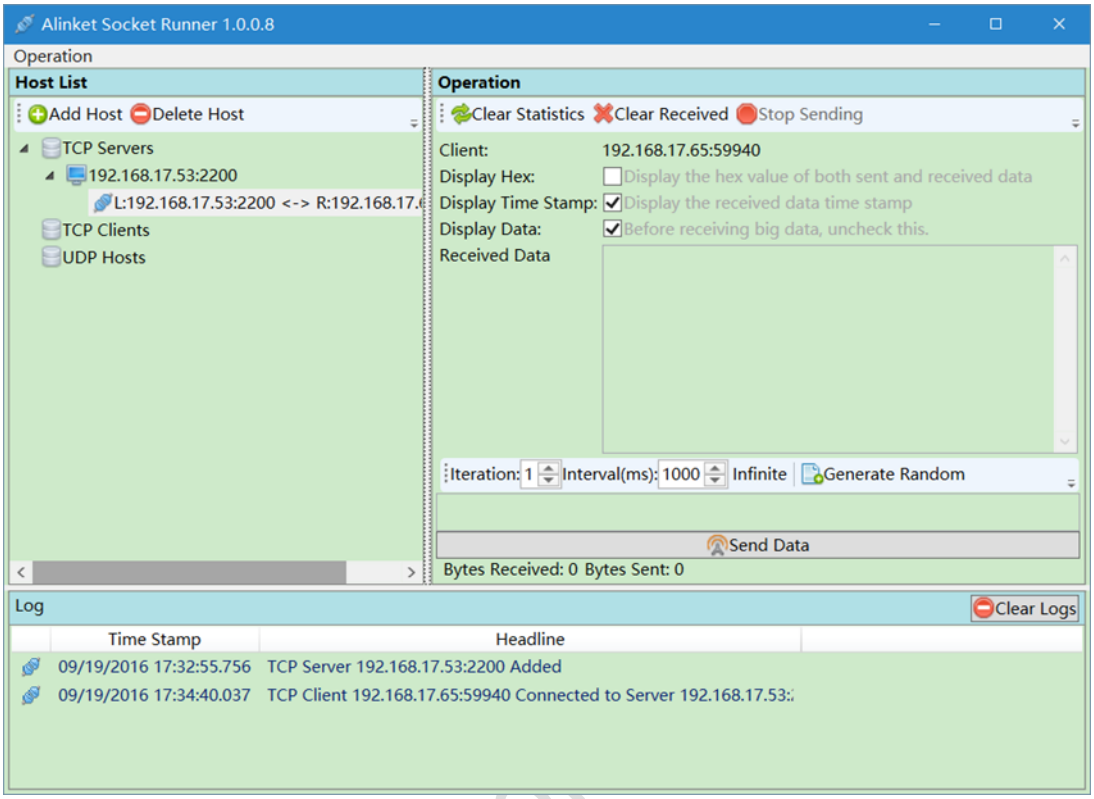

Figure 24 TCP Connected

4.2.1.2 UDP

Step1. Set up a client on computer, configure the UDP setting.

Step3. Repeat step 2~7 in chapter 4.2. But server URL in step 3 should be udp://XXX.XXX.X.X:port number.

4.2.2 ACM Mode for Wi-Fi

4.2.2.1 ACMTH

ACMTH (ACM Test Host) is a tool for ACM test simulated as a host. It includes mainly 4 functions.

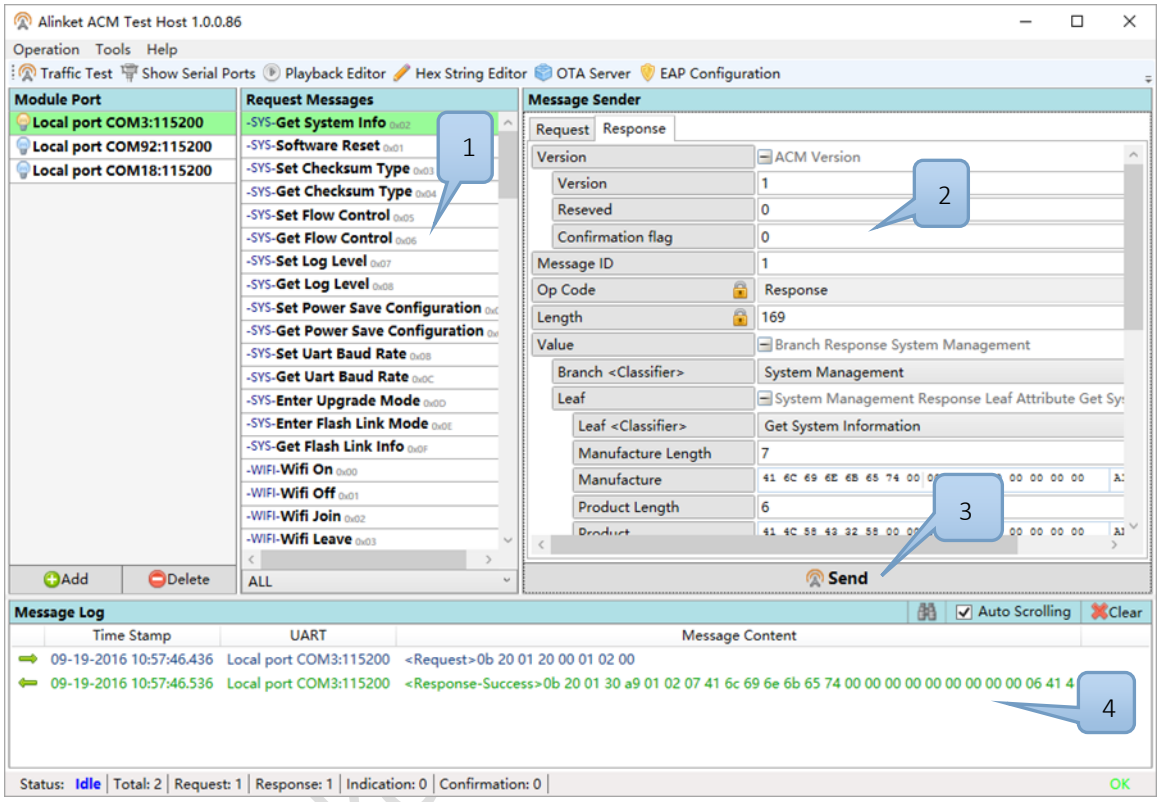

Figure 25 ACMTH Function Blocks

Part 1: Show different function which can set module in different status.

Part 2: Each function in part1 have child configuration.

Part 3: Execute the current setting or get message from module.

Part 4: Show the send and receive message.

4.2.2.2 Configuration Process

Users can send ACM commands to module for executions such as ON or OFF WIFI, Join or Leave AP and so on. It is described below on how to use ACM tool to send command. Detailed commands please refer to *AN_ACM_User Manual.*

Step1. Connect EVK and PC with USB-to-Serial

Step2. Open ACMTH

Step3. Click “Add” to add port in “Module Port” (Double click/right click port to open or close port)

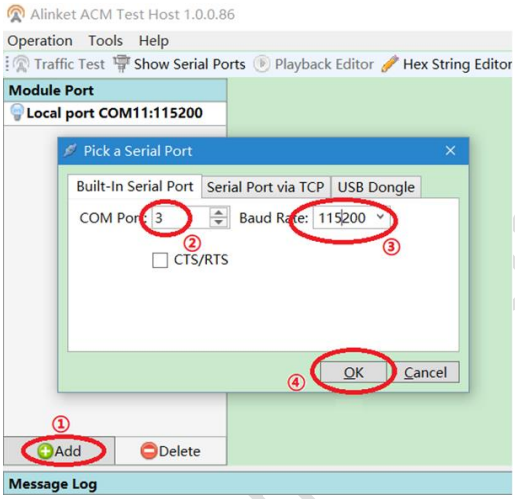

Figure 26 Add Serial Port in ACMTH

Step4. Choice message you want to send in “Request Messages”

Step5. Clink “Send” button. If Send message successful, tool can get response from module

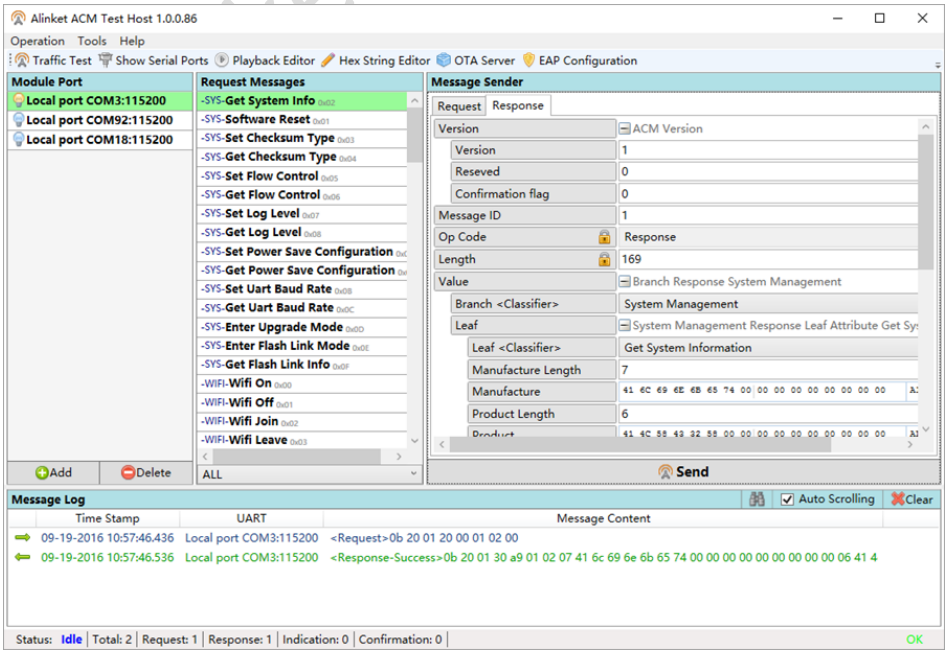

Figure 27 ACM Operation

4.2.2.3 Roaming

Step1: setup test environment as below:

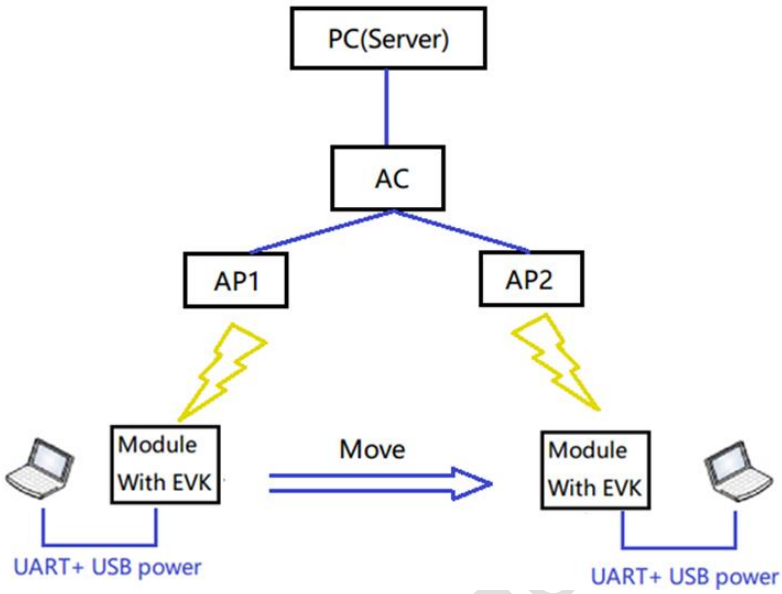

Figure 28 Roaming Setup

Note: The SSID and password of AP1 and AP2 must be the same.

Step2: Start TCP or UDP traffic between module and server

Step3: Check AP info and RSSI by ACM command "Get AP Information"

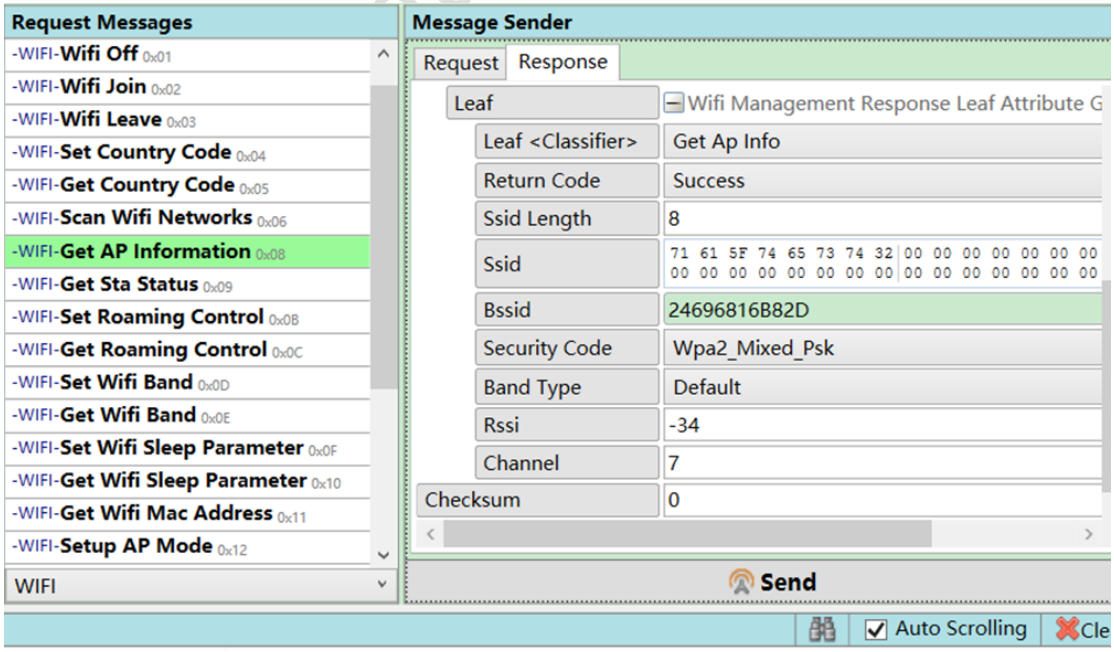

Figure 29 Get AP Information

Step4: Set roaming parameters.

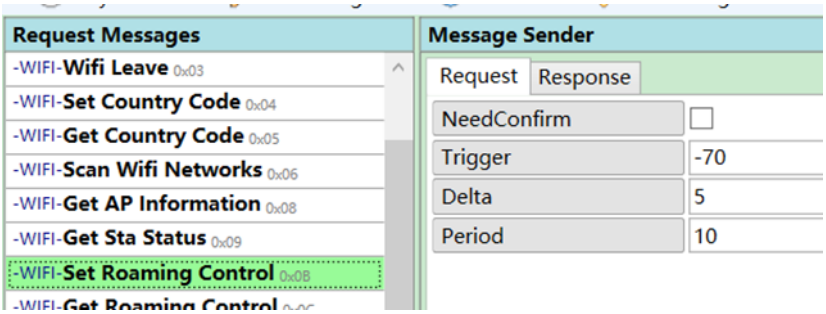

Figure 30 Set Roaming Parameters

Table 9 Roaming Parameters

Parameter	Value	Unit
Trigger	-1 to -100	dBm
Delta	1 to 100	dBm
Period	1 to 100	Second

Step5: Move the module from the coverage of AP1 to AP2, check the BSSID and RSSI of AP2.

Note: A successful roaming must

1) IP address of module won't change.

2) Traffic won't stop.

4.2.2.4 EAP

Step1. Open port with baud rate as SW default

Step2. Click “EAP Configuration” tool in ACM tool and configure it as follows

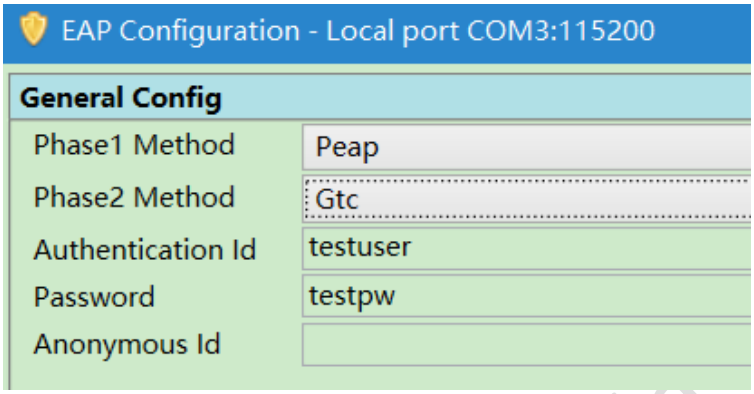

Figure 31 EAP Configuration

Note: Phase1 Method must be ”PEAP”; Phase2 Method can be “GTC” or “MsChapV2”; Authentication ID and Password is defined by Radius server.

Step3: Send “WIFI on” message;

Step4: Fill in destination AP SSID, and set security as “Wpa2_8021X_Eap_Secure”, leave password as blank, then send “WIFI Join” message.

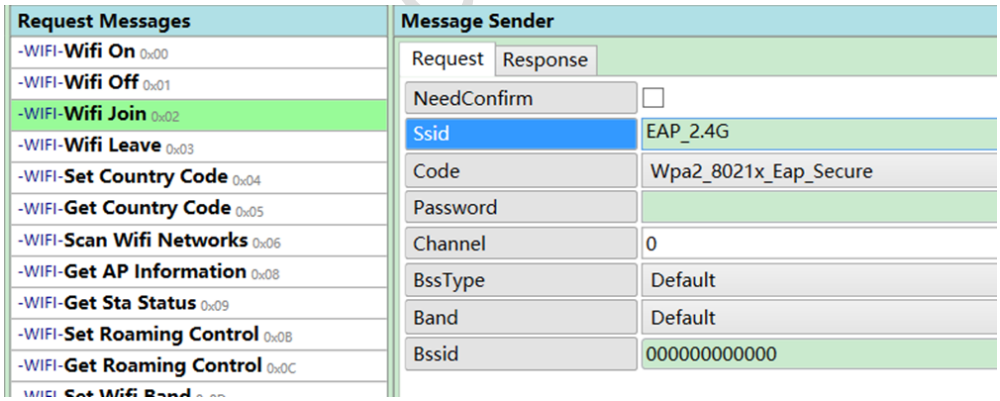

Figure 32 Wi-Fi Join for EAP

4.2.3 ACM Mode for BT

4.2.3.1 EVK to PC

Step1: ALXC12B EVK connects to the USB port of your PC and gets this EVK COM port (COM3) from Device Manager of PC.

Step2: Open ACMTH tool and send "WIFI on" command.

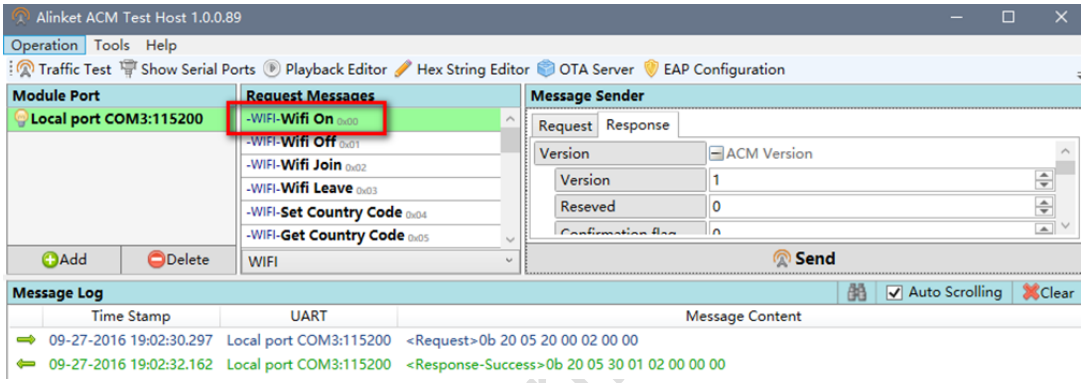

Figure 33 Wi-Fi On

Step3: After Wi-Fi On successfully, send "BT On" command.

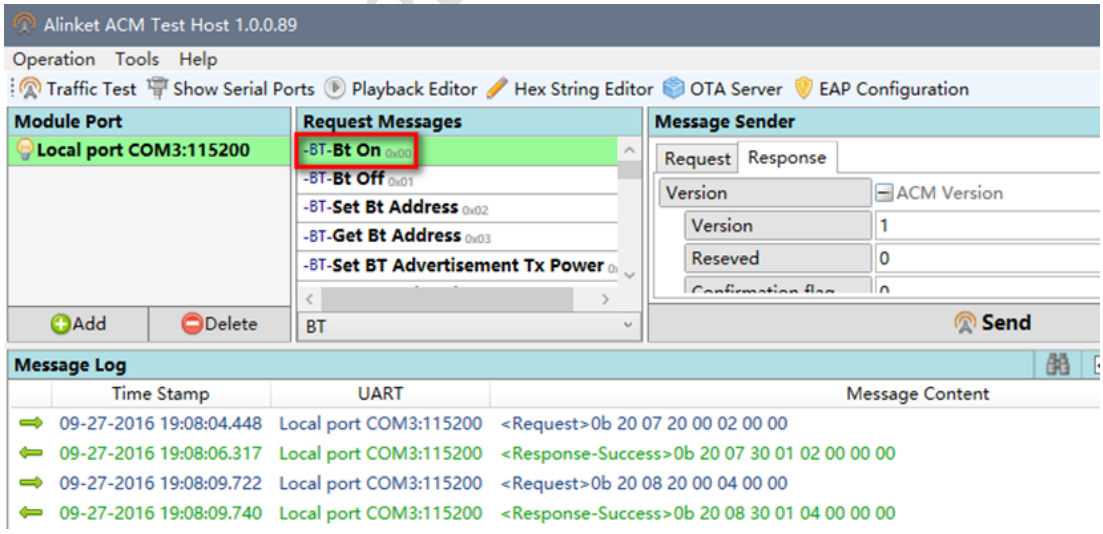

Figure 34 BT On

Step4: Setting BT mode to ”slave “ and send “set BT Mode” on ACMTH tool.

Step5: Connect with PC Bluetooth, Click “win10”---“setting”—“device”---"Bluetooth” and pair corresponding device in list.

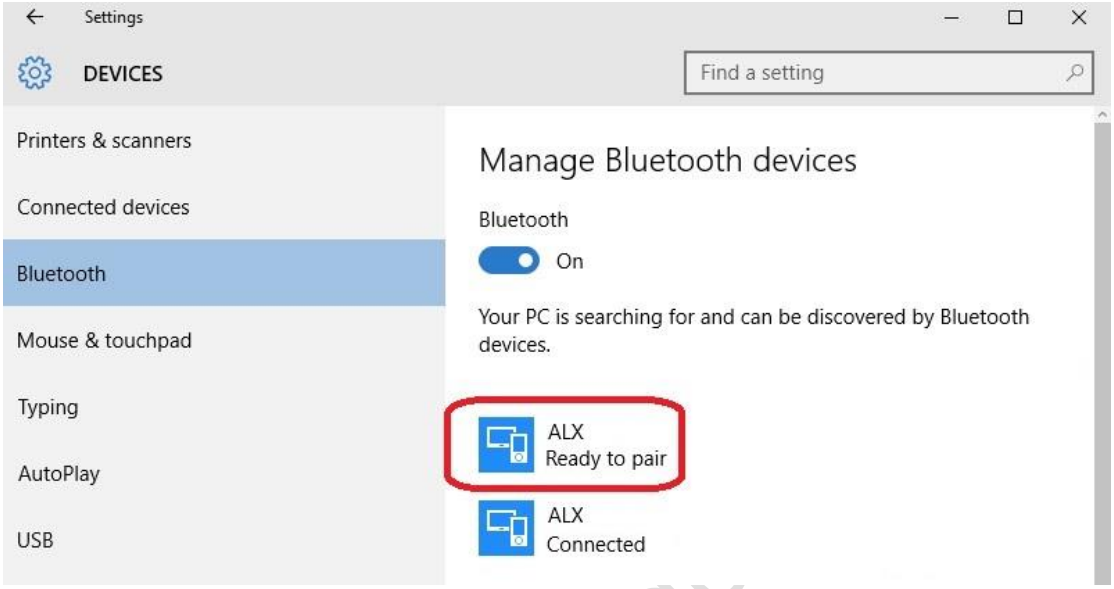

Figure 35 Ready for Pairing

Step6: Waiting for connection successfully.

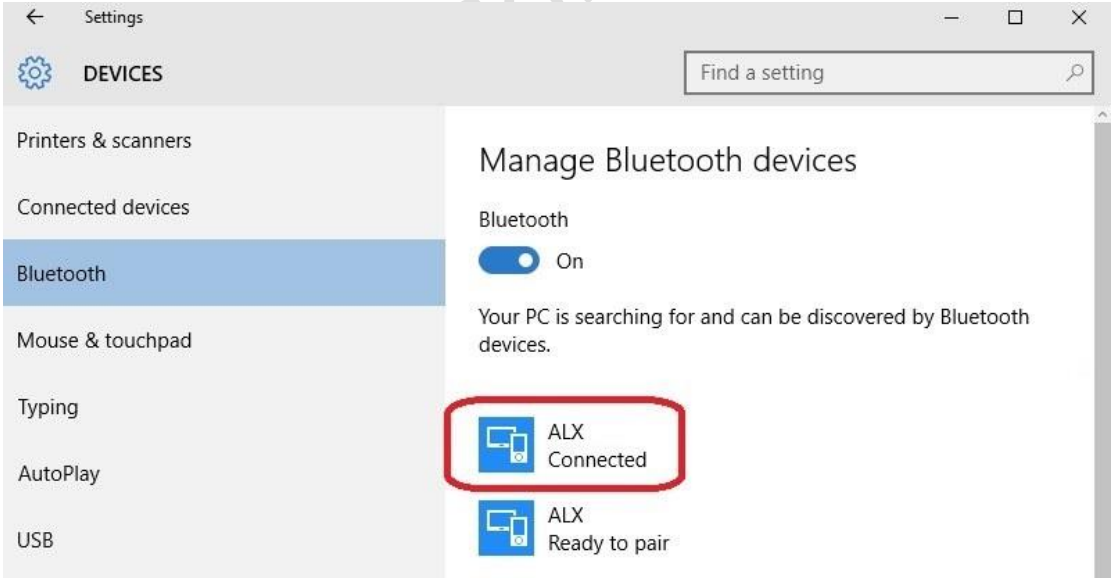

Figure 36 Pairing Successful

Step7: Open Alinket RFCOMM Test Host tool, chose corresponding device and click “connect”

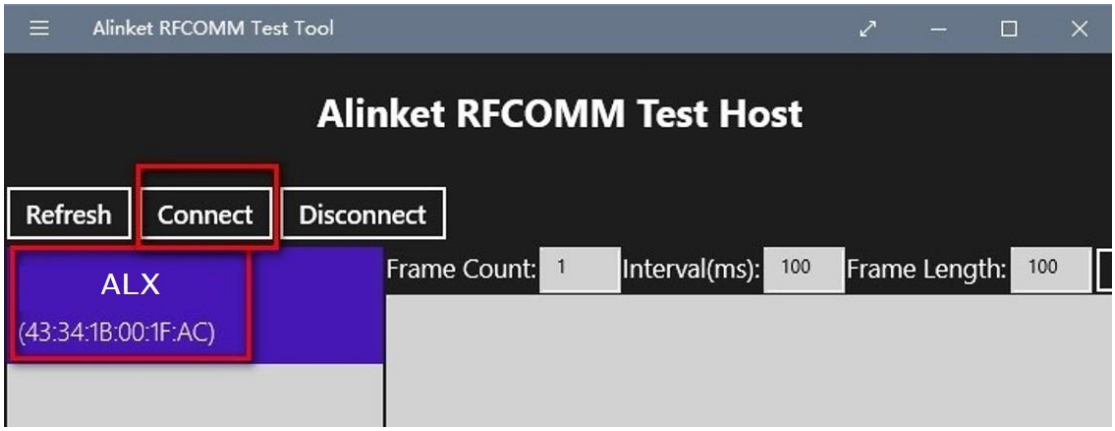

Figure 37 Connecting through RFCOMM

Step8: ALXC12B should receive a message indicating that the connecting was successful.

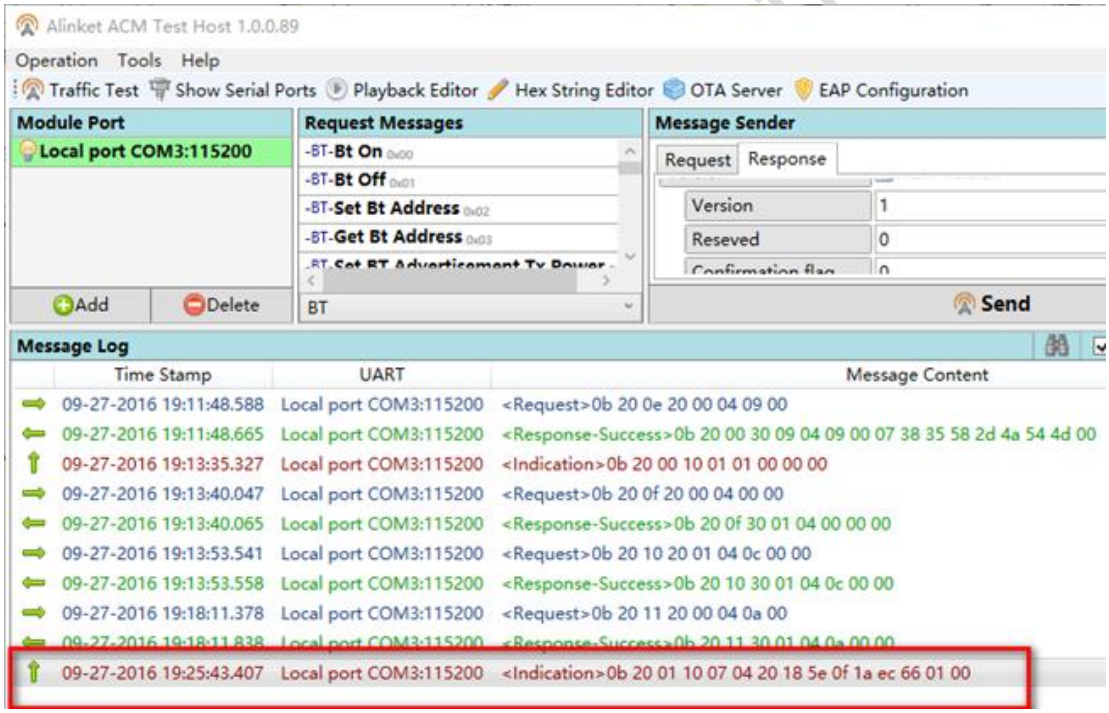

Figure 38 Connected Status Indication

4.2.3.2 EVK to EVK

Step1: Prepare 2ps ALXC12B, one is as master role and the other is as slave role. For example, ALXC12B_Local port com3 is as master and ALXC12B_Local port com307 is as slave;

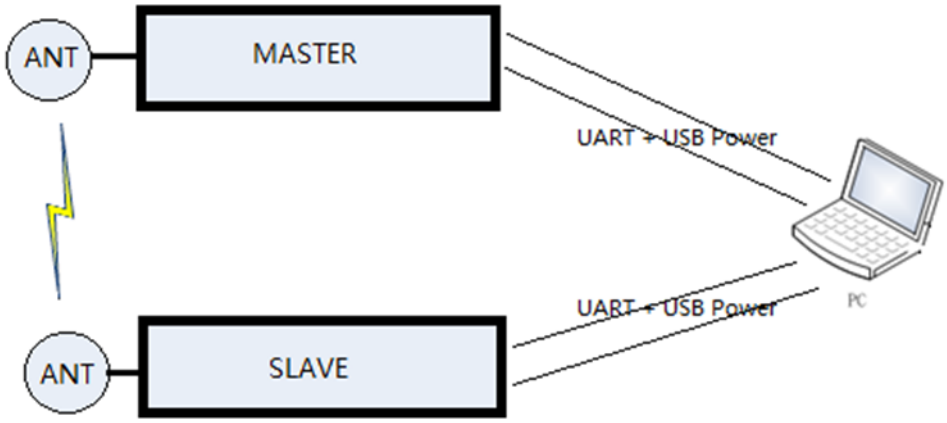

Figure 39 Master & Slave Test Connection

Step2: Send "WIFI ON" and "BT ON" command respectively from local port COM3 and COM307.

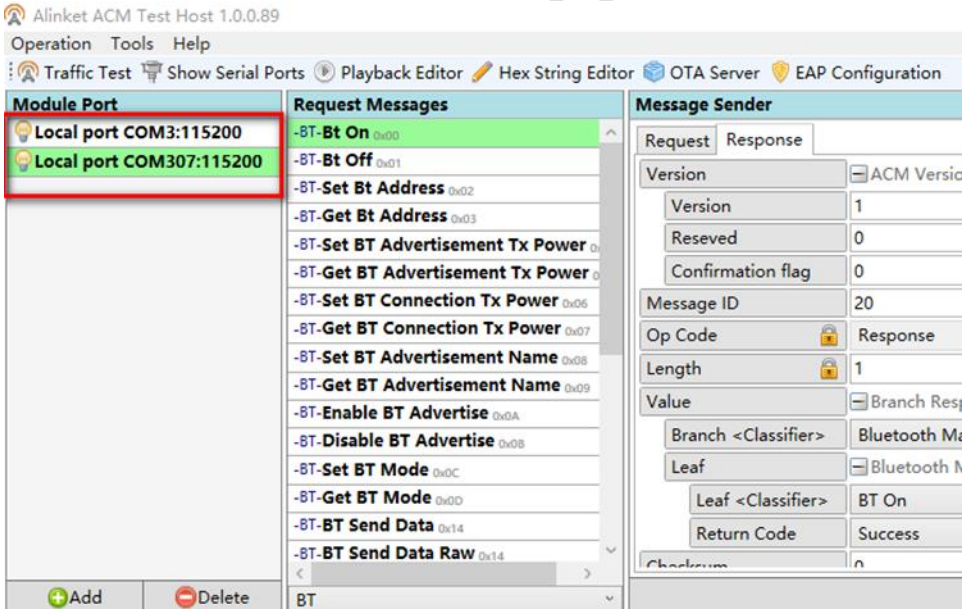

Figure 40 Port Configuration by ACMTH

Step3: Send "Enable BT advertise" from the slave role (local port com307).

Step4: Use “BT Master Connect” to setup the connection with slave’s MAC address.

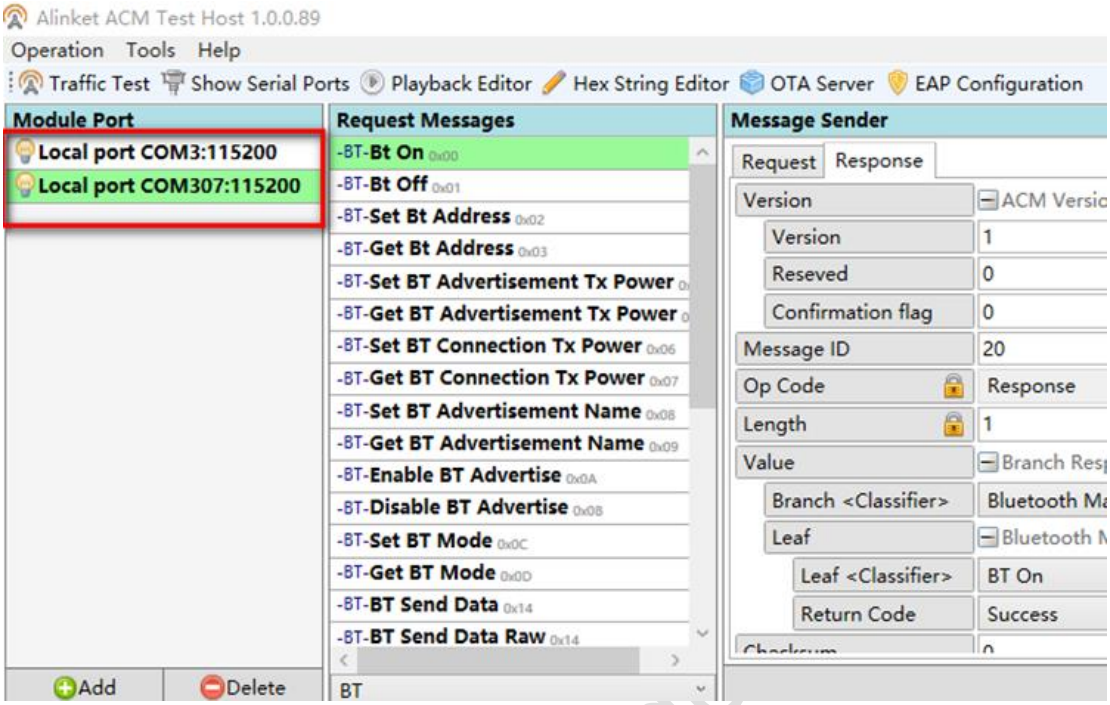

Figure 41 Setup Connection between Master & Slave

Step5: Master gets response with success return code and connect up indication.

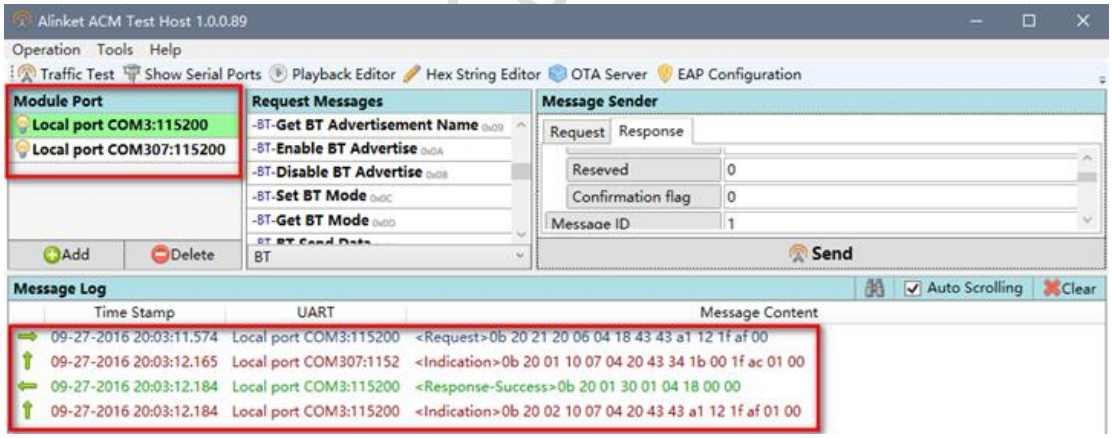

Figure 42 Connection Successful Indication

4.2.4 ACM Mode for BLE

Same procedure as ACM Mode for BT

Step1: Add local port.

Step2: Open ACMTH tool and send “WIFI on” command.

Step3: After Wi-Fi On successfully, send “BLE On” command.

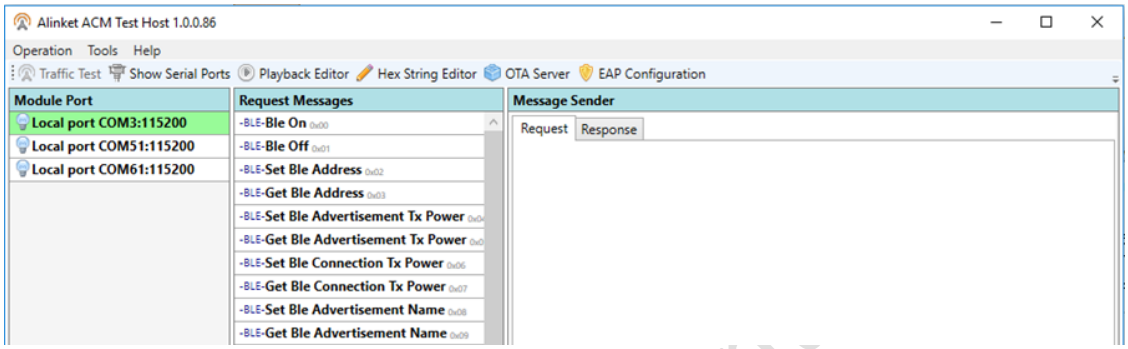

Figure 43 BLE On

Step4. Chose message you want to send in “Request Messages”

Step5. Clink “Send” button. If Send message successful, tool can get response from module

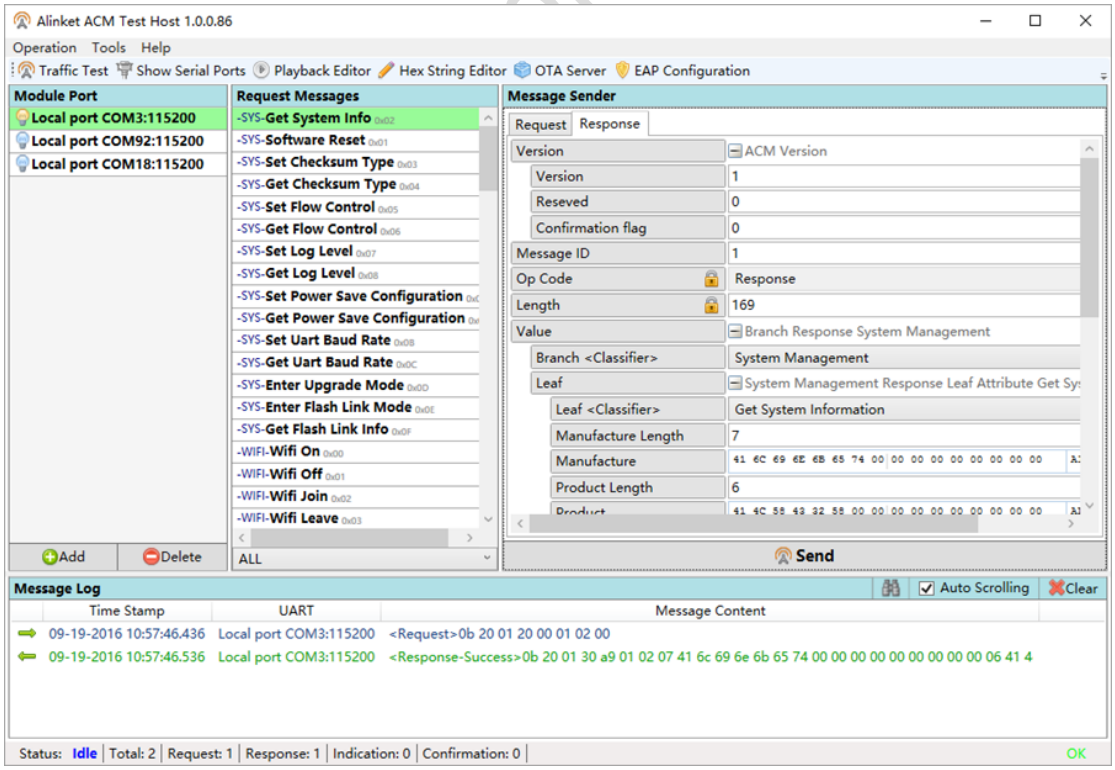

Figure 44 BLE Operation

5. Work Condition

5. 1 Range of Operation

Table 10 Range of Operation – General Specification

Symbol	Description	Min.	Max.	Unit
Tg	General operating temperature	-30	85	°C
Ts	Storage temperature	-40	85	°C
VDDIO	IO power supply	2.8	3.6	V
VDDBAT	Power supply	2.8	3.6	V
MSL	Moisture Sensitivity Level	3		
RoHS	Restriction of Hazardous Substances	Compliant		

5. 2 Recommended Operation Range

Table 11 Recommended Voltage

Symbol	Min.	Typ.	Max.	Unit
VDD	3.0	3.3	3.6	V

Table 12 Recommended Temperature and Humidity

Operating temperature	-20°C to 70°C
Storage Temperature	5°C to 35°C
Humidity Range	40% ~ 70%, relative humidity

6. Manufacturing

6. 1 Recommended Reflow Profile

Referred to IPC/JEDEC Standard,

Peak Temperature < 250 °C,

Number of Times <= 2Times.

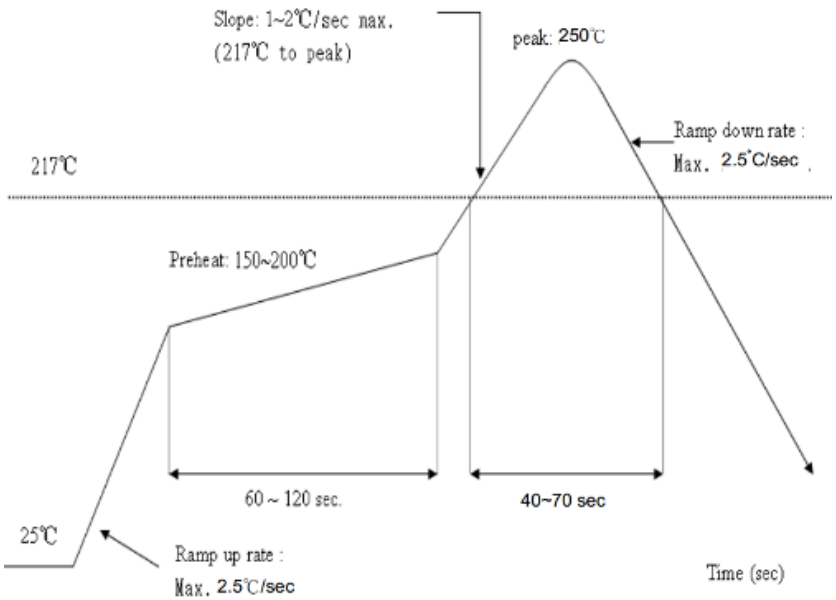

Figure 45 Reflow Profile

6. 2 ROHS Declaration

To the best of our present knowledge, given our supplier declarations, this product does not contain any substance that is banned by EU RoHS Directive 2011/65/EU and its amendment directives – XRF. RoHS restricted substances are list below.

- Cadmium (Cd)
- Lead (Pb)
- Mercury (Hg)
- Hexavalent Chromium (Cr(VI))
- Polybrominated biphenyls (PBBs)
- Polybrominated diphenylether (PBDEs)

7. Ordering Information

Table 13 Order Information

ALXC12A	Wi-Fi 2.4GHz + BT 4.0 Combo IoT Controller, On-Board Antenna
ALXC12B	Wi-Fi 2.4GHz + BT4.0 Combo IoT Controller, External Antenna (U.FL)

8. Technical Support

For technical support, please contact:

Alinket Electronic Technology (Shanghai) Co., Ltd.

E-Mail: support@alinket.com

Tel: +86 21 6104 8128

Address: Floor 4, No.10, Lane 198, Zhangheng Road, Shanghai, 201204 P. R. China

9. Reference

[1] ALXC12B Product Brief, Alinket

[2] ALXC12B Schematic Diagram, Alinket

[3] ALXC12B Datasheet, Alinket

Appendix: Acronyms and Abbreviations

The following list of acronyms and abbreviations may appear in this document.

-16QAM	16Quadrature Amplitude Modulation
-64QAM	64Quadrature Amplitude Modulation
-ADC	Analog-to-Digital Converter
-ARM	Advanced RISC Machines
-ART	Adaptive Real-Time Memory
-AiDK	Alinket IoT Development Kit
-AES	Audio Engineering Society
-BPSK	Binary Phase Shift Keying
-CMOS	Complementary Metal Oxide Semiconductor
-CE	Conformite Europeenne
-CRC	Cyclic Redundancy Code
-CCK	Complementary Code Keying
-DAC	Digital-to-Analog Converter
-DMIPS	Dhrystone Million Instructions executed Per Second
-DSP	Digital Signal Processor
-DMA	Direct Memory Access
-DSS	Direct Sequence Spread Spectrum
-EAP	Extension Authentication Protocol
-EVK	Evaluation Kit
-EVM	Error Vector Magnitude
-FIFO	First In First Out
-GPIO	General-Purpose Input-Output
-HNP	Host Negotiation Protocol
-I2C	Inter-Integrated Circuit
-I2S	Inter-IC Sound
-ISM	Industrial
-IEEE	Institute of Electrical and Electronics Engineers
-IP	Internet Protocol
-IC	Integrated Circuit
-JTAG	Joint Test Action Group
-LQFP	Low-profile Quad Flat Package
-MAC	Medium Access Control
-MSL	Moisture Sensitivity Level
-OFDM	Orthogonal Frequency Division Multiplexing
-PWM	Pulse Width Modulation
-PER	Packet Error Rate
-PEAP-GTC	Protected Extensible Authentication Protocol- Good Till Cancelled
-PEAP-MSCHAP	Microsoft Challenge Handshake Authentication Protocol

-PBB	Poly Brominated Biphenyl
-PBDE	Poly Brominated Biphenyl Ether
-PLL	Phase Locked Logic
-QPSK	Quadrature Phase Shift Keying
-ROHS	Restriction of Hazardous Substances
-RC	Real Clock
-RTC	Real Time Clock
-RF	Radio Frequency
-SPI	Serial Peripheral Interface
-SDIO	Secure Digital Input and Output Card
-SRAM	Static Random Access Memory
-SKU	Stock Keeping Unit
-SRP	Session Request Protocol
-TLS	Transport Layer Security
-TCP	Transmission Control Protocol
-TKIP	Temporal Key Integrity Protocol
-USBH	Universal Serial Bus Host Mode
-USBD	Universal Serial Bus Device Mode
-UDP	User Datagram Protocol
-UART	universal asynchronous receiver/transmitter
-WiFi	Wireless Fidelity
-WLAN	Wireless Local Area Network
-WAPI	WLAN Authentication and Privacy Infrastructure
-WPA	Wi-Fi Protected Access

FCC Statement

Any Changes or modifications not expressly approved by the party responsible for compliance could void the user's authority to operate the equipment.

This device complies with part 15 of the FCC Rules. Operation is subject to the following two conditions:

(1) This device may not cause harmful interference, and

(2) This device must accept any interference received, including interference that may cause undesired operation.

FCC Radiation Exposure Statement:

This equipment complies with FCC radiation exposure limits set forth for an uncontrolled environment .This equipment should be installed and operated with minimum distance 20cm between the radiator& your body.

FCC Label Instructions

The outside of final products that contains this module device must display a label referring to the enclosed module. This exterior label can use wording such as:

"Contains Transmitter Module FCC ID:2AELJ-ALXC12B" or "Contains FCC ID:2AELJ-ALXC12B" Any similar wording that expresses the same meaning may be used.

Note: This equipment has been tested and found to comply with the limits for a Class B digital device, pursuant to part 15 of the FCC Rules. These limits are designed to provide reasonable protection against harmful interference in a residential installation. This equipment generates, uses and can radiate radio frequency energy and, if not installed and used in accordance with the instructions, may cause harmful interference to radio communications. However, there is no guarantee that interference will not occur in a particular installation. If this equipment does cause harmful interference to radio or television reception, which can be determined by turning the equipment off and on, the user is encouraged to try to correct the interference by one or more of the following measures:

—Reorient or relocate the receiving antenna.

—Increase the separation between the equipment and receiver.

—Connect the equipment into an outlet on a circuit different from that to which the receiver is connected.

—Consult the dealer or an experienced radio/TV technician for help.