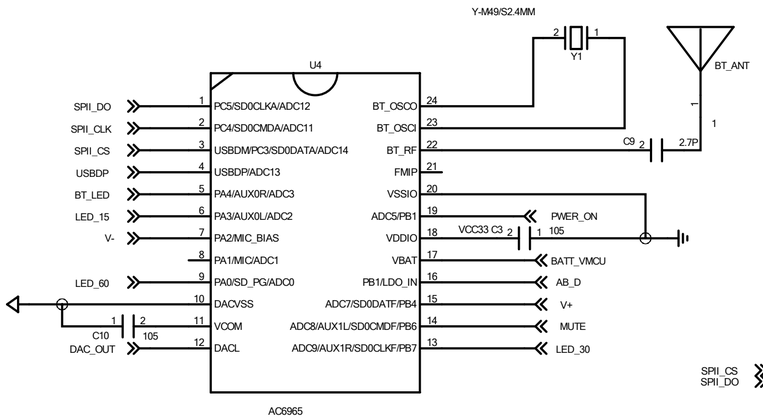
Y-M49/S2.4MM
Y1
U4
BT_ANT
SPII_DO
SPII_CLK
SPII_CS
USBDP
BT_LED
LED_15
V-
LED_60
DAC_OUT
C10
105
PC5/SD0CLKA/ADC12
PC4/SD0CMDA/ADC11
USBDM/PC3/SD0DATA/ADC14
USBDP/ADC13
PA4/AUX0R/ADC3
PA3/AUX0L/ADC2
PA2/MIC_BIAS
PA1/MIC/ADC1
PA0/SD_PG/ADC0
DACVSS
VCOM
DACL
BT_OSCO
BT_OSCI
BT_RF
FMIP
VSSIO
ADC5/PB1
VDDIO
VBAT
PB1/LDO_IN
ADC7/SD0DATF/PB4
ADC8/AUX1L/SD0CMDF/PB6
ADC9/AUX1R/SD0CLKF/PB7
C9
2.7P
PWER_ON
VCC33 C3
105
BATT_VMCU
AB_D
V+
MUTE
LED_30
AC6965

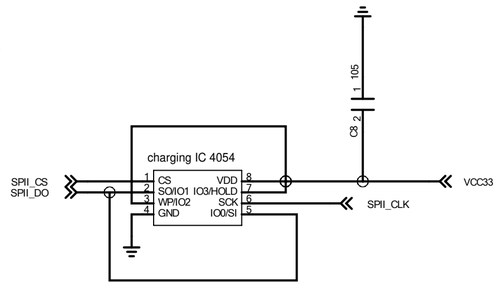
charging IC 4054
SPII_CS
SPII_DO
CS
SO/IO1
WP/IO2
GND
VDD
IO3/HOLD
SCK
IO0/SI
C8
105
VCC33
SPII_CLK

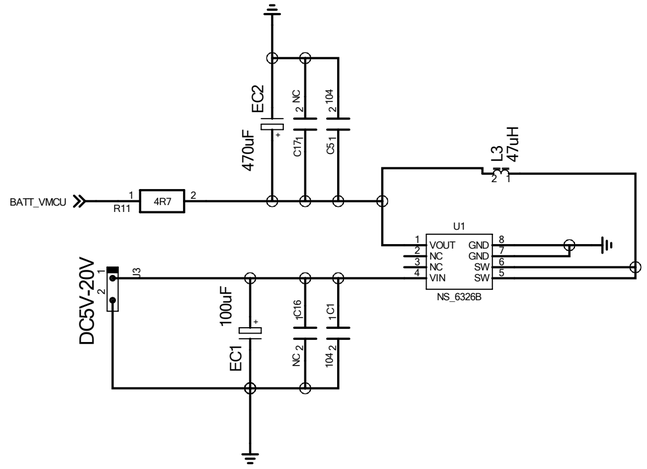
BATT_VMCU
R11
4R7
470uF
EC2
NC
C17
104
C5
L3
47uH
U1
VOUT
NC
NC
VIN
GND
GND
SW
SW
NS_6326B
DC5V-20V
J3
100uF
EC1
C16
C1
NC
104

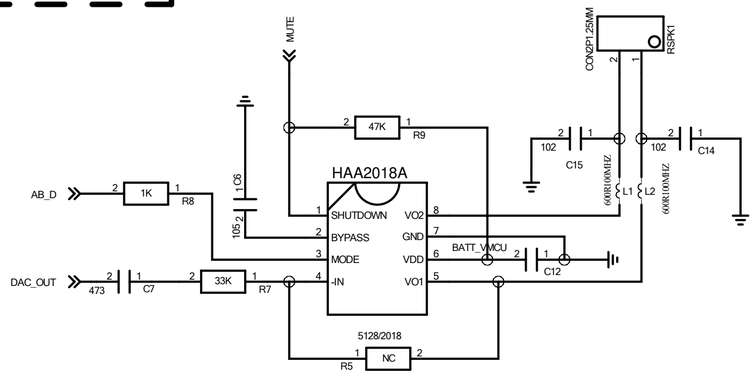
MUTE
CON2P1.25MM
RSPK1
47K
R9
HAA2018A
AB_D
1K
R8
C6
105
SHUTDOWN
BYPASS
MODE
IN
VO2
GND
VDD
VO1
BATT_VMCU
C12
DAC_OUT
473
C7
33K
R7
102
C15
102
C14
L1
L2
600R100MHZ
600R100MHZ
5128/2018
R5
NC

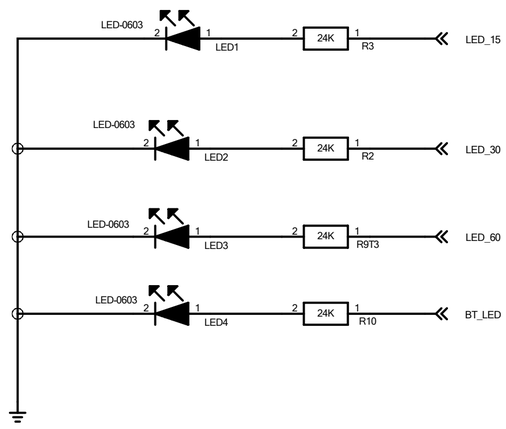
LED-0603
LED1
24K
R3
LED_15
LED-0603
LED2
24K
R2
LED_30
LED-0603
LED3
24K
R9T3
LED_60
LED-0603
LED4
24K
R10
BT_LED

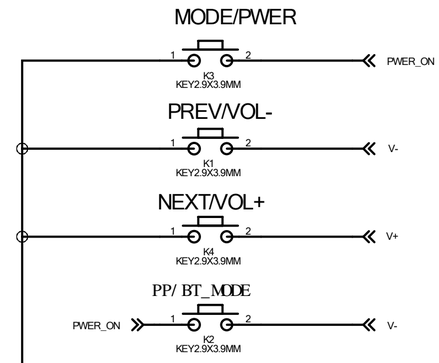
MODE/PWER
K3
KEY2.9X3.9MM
PWER_ON
PREV/VOL-
K1
KEY2.9X3.9MM
V-
NEXT/VOL+
K4
KEY2.9X3.9MM
V+
PP/ BT_MODE
PWER_ON
K2
KEY2.9X3.9MM
V-