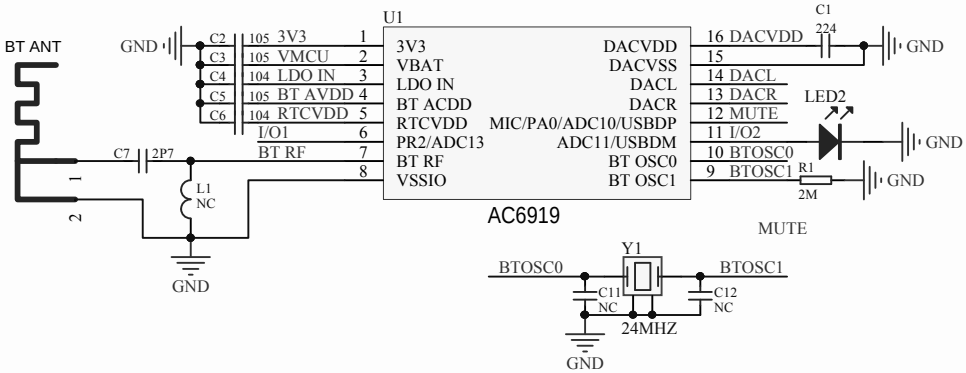
BT ANT
GND
C2 105 3V3
C3 105 VMCU
C4 104 LDO IN
C5 105 BT AVDD
C6 104 RTCVDD
I/O1
BT RF
C7 2P7
L1 NC
U1
3V3
VBAT
LDO IN
BT ACDD
RTCVDD
PR2/ADC13
BT RF
VSSIO
DACVDD
DACVSS
DACL
DACR
MIC/PA0/ADC10/USBDP
ADC11/USBDM
BT OSC0
BT OSC1
16 DACVDD
15
14 DACL
13 DACR
12 MUTE
11 I/O2
10 BTOSC0
9 BTOSC1
C1 224
LED2
R1 2M
AC6919
MUTE
Y1
BTOSC0
BTOSC1
C11 NC
C12 NC
24MHZ

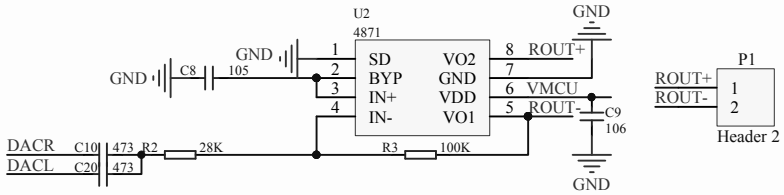
U2
4871
GND
C8 105
SD
BYP
IN+
IN-
VO2
GND
VDD
VO1
ROUT+
VMCU
ROUT-
C9 106
P1
ROUT+
ROUT-
Header 2
DACR C10 473
DACL C20 473
R2 28K
R3 100K

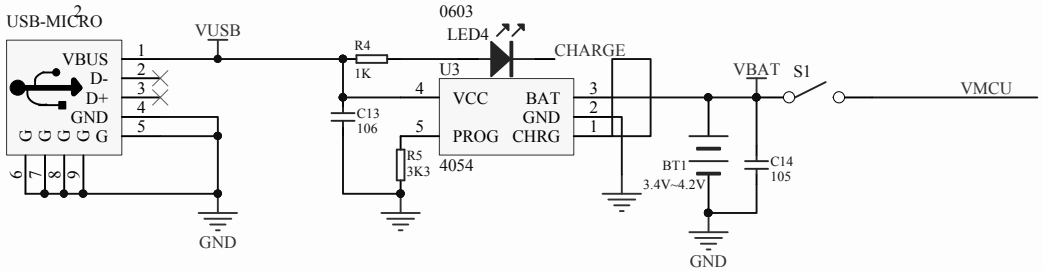
USB-MICRO
VBUS
D-
D+
GND
VUSB
R4 1K
0603
LED4
CHARGE
U3
VCC
BAT
GND
PROG
CHRG
4054
C13 106
R5 3K3
BT1 3.4V~4.2V
C14 105
VBAT
S1
VMCU