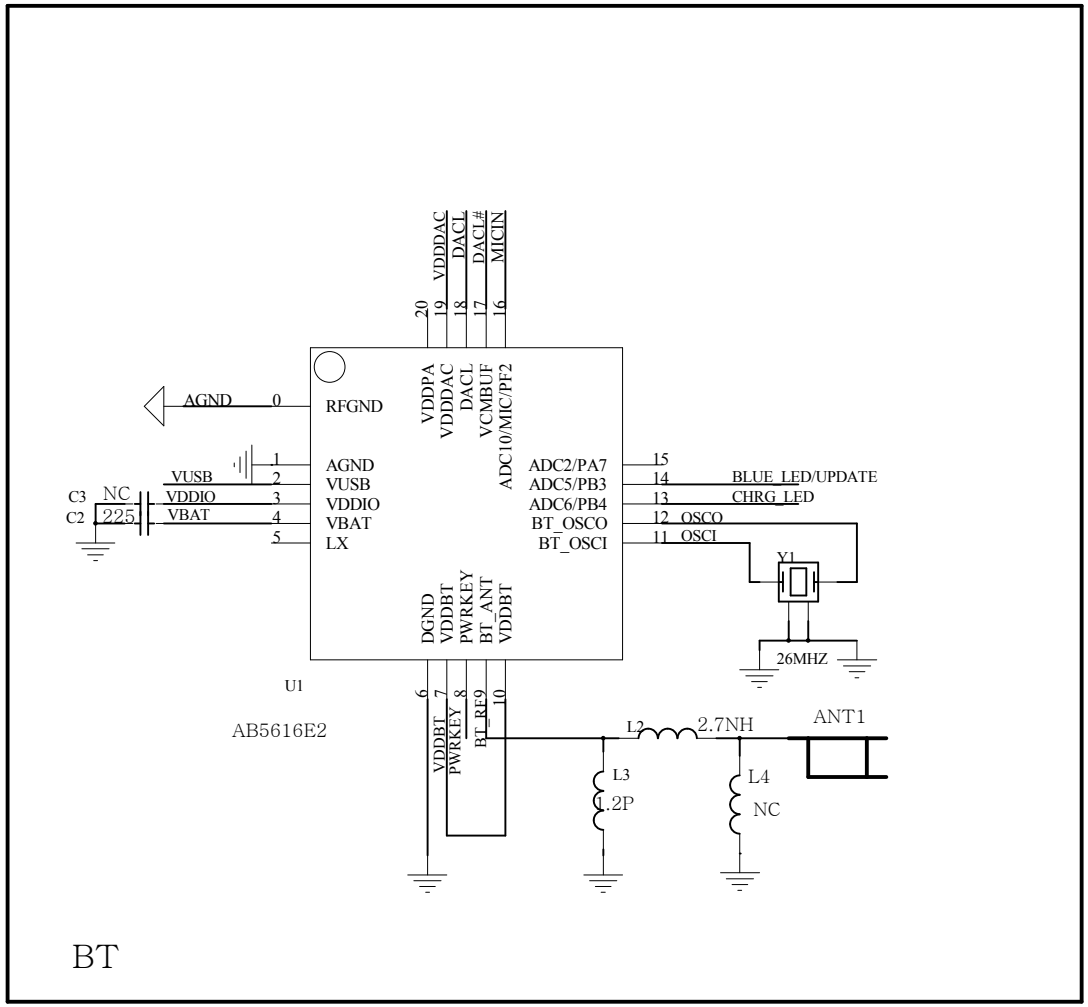
BT
U1
AB5616E2
RFGND
AGND
VUSB
VDDIO
VBAT
LX
VDDPA
VDDDAC
DACL
VCMBUF
ADC10/MIC/PF2
ADC2/PA7
ADC5/PB3
ADC6/PB4
BT_OSCO
BT_OSCI
DGND
VDDBT
PWRKEY
BT_ANT
BT_RE9
VDDDAC
DACL#
MICIN
BLUE_LED/UPDATE
CHRG_LED
OSCO
OSCI
C3 NC
C2 225
Y1
26MHZ
L2 2.7NH
ANT1
L3 1.2P
L4 NC

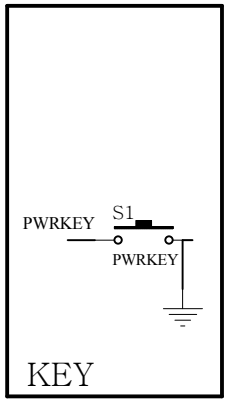
KEY
PWRKEY
S1
PWRKEY

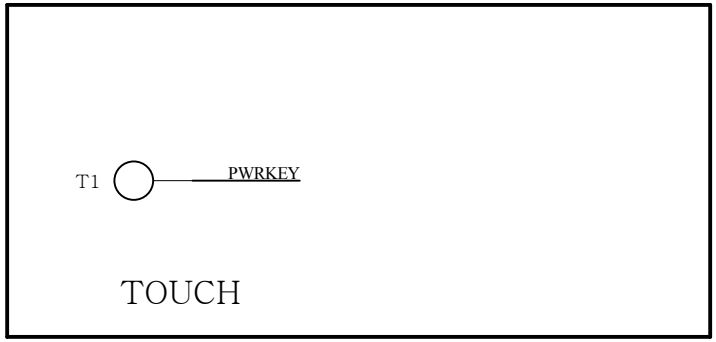
TOUCH
T1
PWRKEY

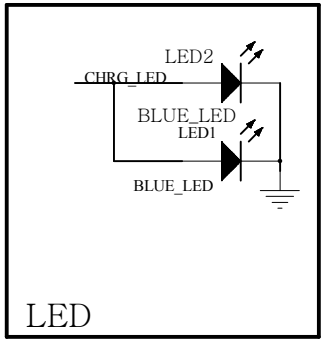
LED
LED2
CHRG_LED
BLUE_LED
LED1
BLUE_LED

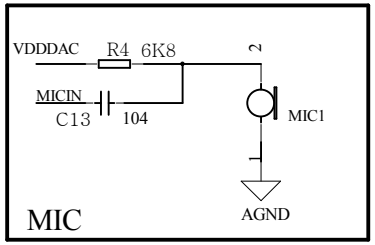
MIC
VDDDAC
R4 6K8
MICIN
C13 104
MIC1
AGND

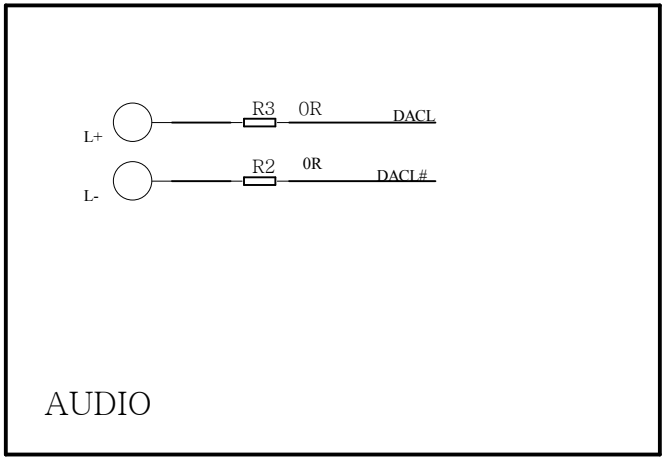
AUDIO
L+
L-
R3 0R
R2 0R
DACL
DACL#

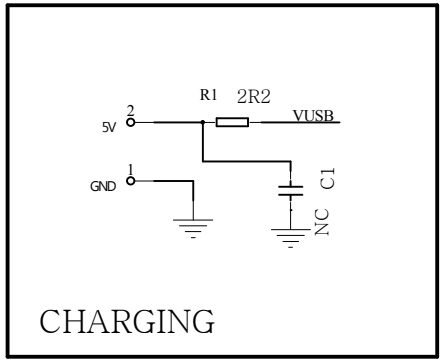
CHARGING
R1 2R2
5V
VUSB
GND
C1 NC

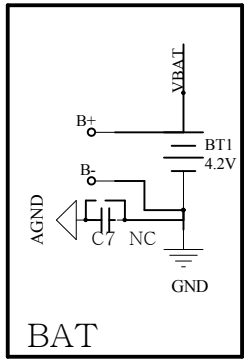
BAT
VBAT
B+
BT1 4.2V
B-
AGND
C7 NC
GND

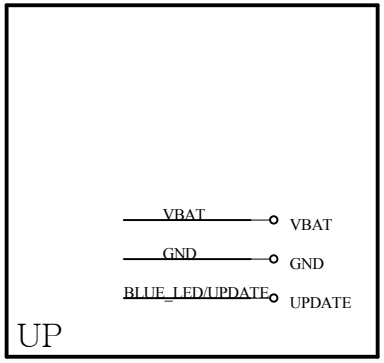
UP
VBAT
GND
BLUE_LED/UPDATE
VBAT
GND
UPDATE