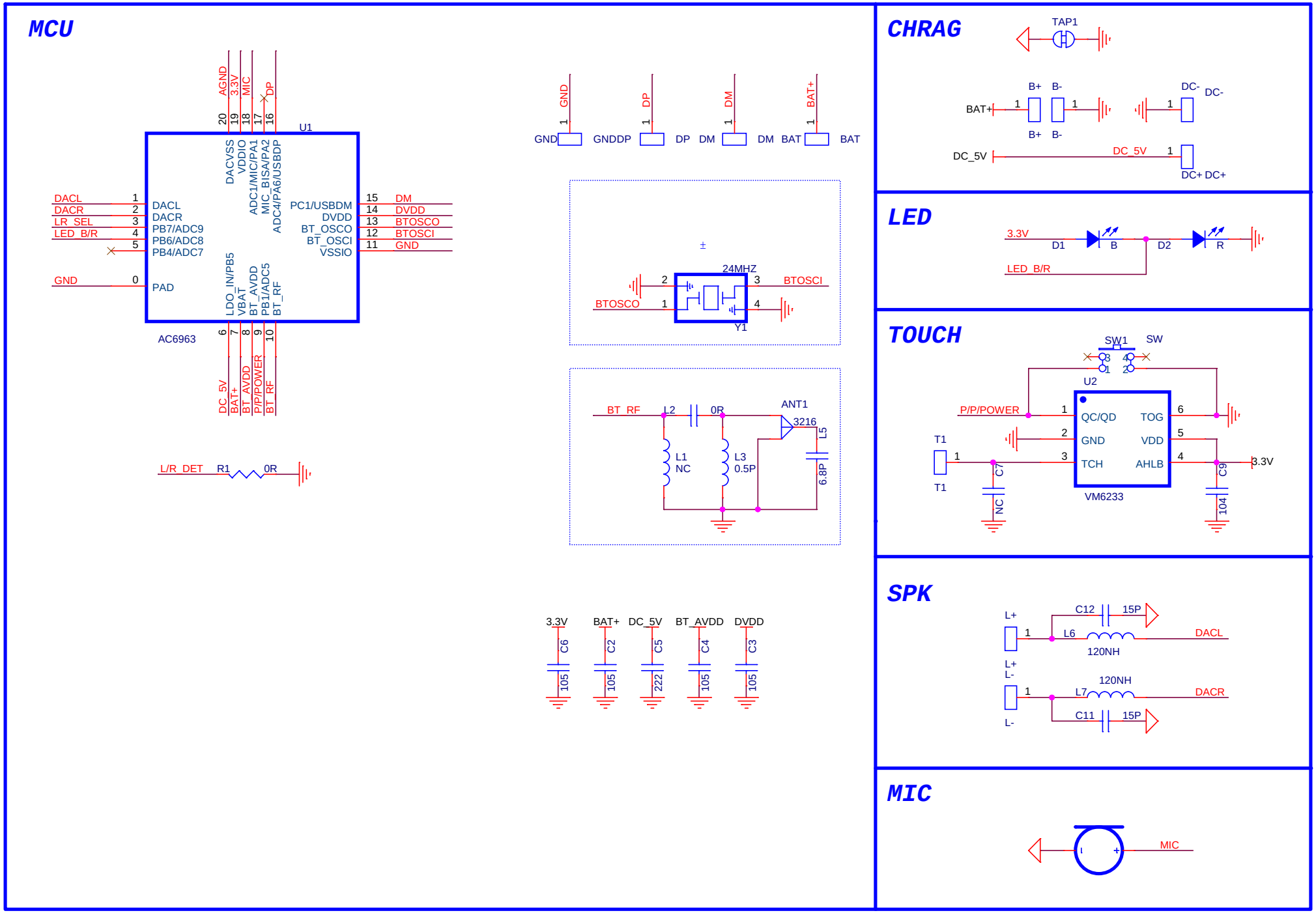
MCU
U1
AC6963
DACL
DACR
LR_SEL
LED_B/R
GND
PAD
PB7/ADC9
PB6/ADC8
PB4/ADC7
PC1/USBDM
DVDD
BT_OSCO
BT_OSCI
VSSIO
DM
DVDD
BTOSCO
BTOSCI
GND
AGND
3.3V
MIC
DP
DACVSS
VDDIO
ADC1/MIC/PA1
MIC_BISA/PA2
ADC4/PA6/USBDP
LDO_IN/PB5
VBAT
BT_AVDD
PB1/ADC5
BT_RF
DC_5V
BAT+
BT_AVDD
P/P/POWER
BT_RF
L/R_DET
R1
0R
GND
GNDDP
DP
DM
DM
BAT
BAT
24MHZ
Y1
BTOSCO
BTOSCI
BT_RF
L2
0R
ANT1
3216
L1
NC
L3
0.5P
L5
6.8P
3.3V
BAT+
DC_5V
BT_AVDD
DVDD
C6
C2
C5
C4
C3
105
105
222
105
105
CHRAG
TAP1
B+
B-
BAT+
DC-
DC_5V
DC+
LED
3.3V
D1
B
D2
R
LED_B/R
TOUCH
SW1
SW
U2
P/P/POWER
QC/QD
GND
TCH
TOG
VDD
AHLB
VM6233
T1
C7
NC
C9
104
3.3V
SPK
L+
L-
C12
15P
L6
120NH
DACL
L7
120NH
DACR
C11
15P
MIC
MIC