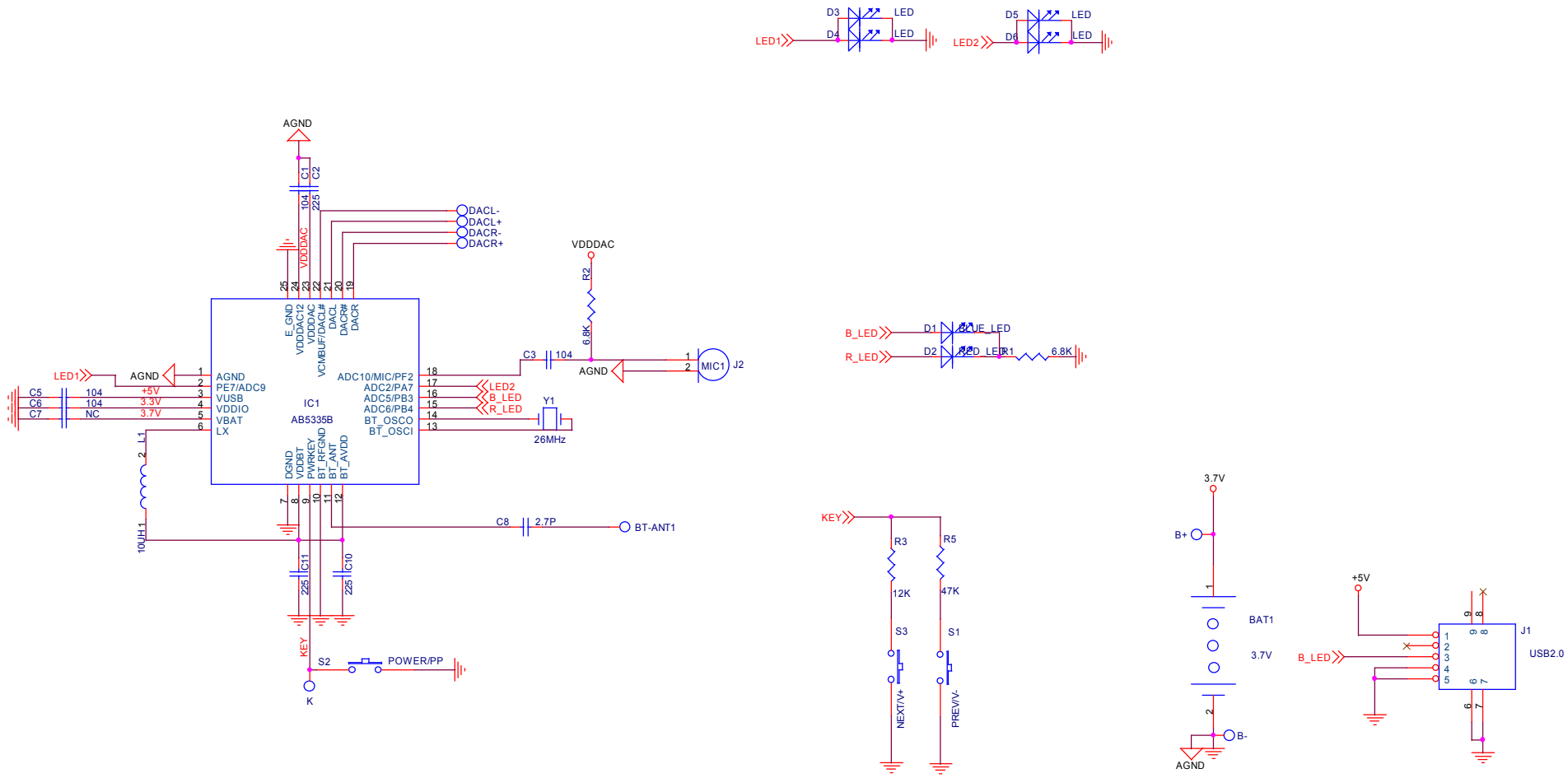
D3
LED
D4
LED
LED1
D5
LED
D6
LED
LED2
AGND
C1
C2
104
225
VDDDAC
DACL-
DACL+
DACR-
DACR+
VDDDAC
R2
6.8K
E_GND
VDDDAC12
VDDDAC
VCMBUF/DACL#
DACL
DACR#
DACR
LED1
AGND
C5
C6
C7
104
104
NC
+5V
3.3V
3.7V
AGND
PE7/ADC9
VUSB
VDDIO
VBAT
LX
IC1
AB5335B
ADC10/MIC/PF2
ADC2/PA7
ADC5/PB3
ADC6/PB4
BT_OSCO
BT_OSCI
C3
104
AGND
MIC1
J2
LED2
B_LED
R_LED
Y1
26MHz
L1
10UH
DGND
VDDBT
PWRKEY
BT_RFGND
BT_ANT
BT_AVDD
C8
2.7P
BT-ANT1
C11
C10
225
225
KEY
S2
POWER/PP
K
B_LED
D1
BLUE_LED
R_LED
D2
RED_LED
R1
6.8K
KEY
R3
12K
R5
47K
S3
S1
NEXT/V+
PREV/V-
3.7V
B+
BAT1
3.7V
B-
AGND
+5V
B_LED
J1
USB2.0