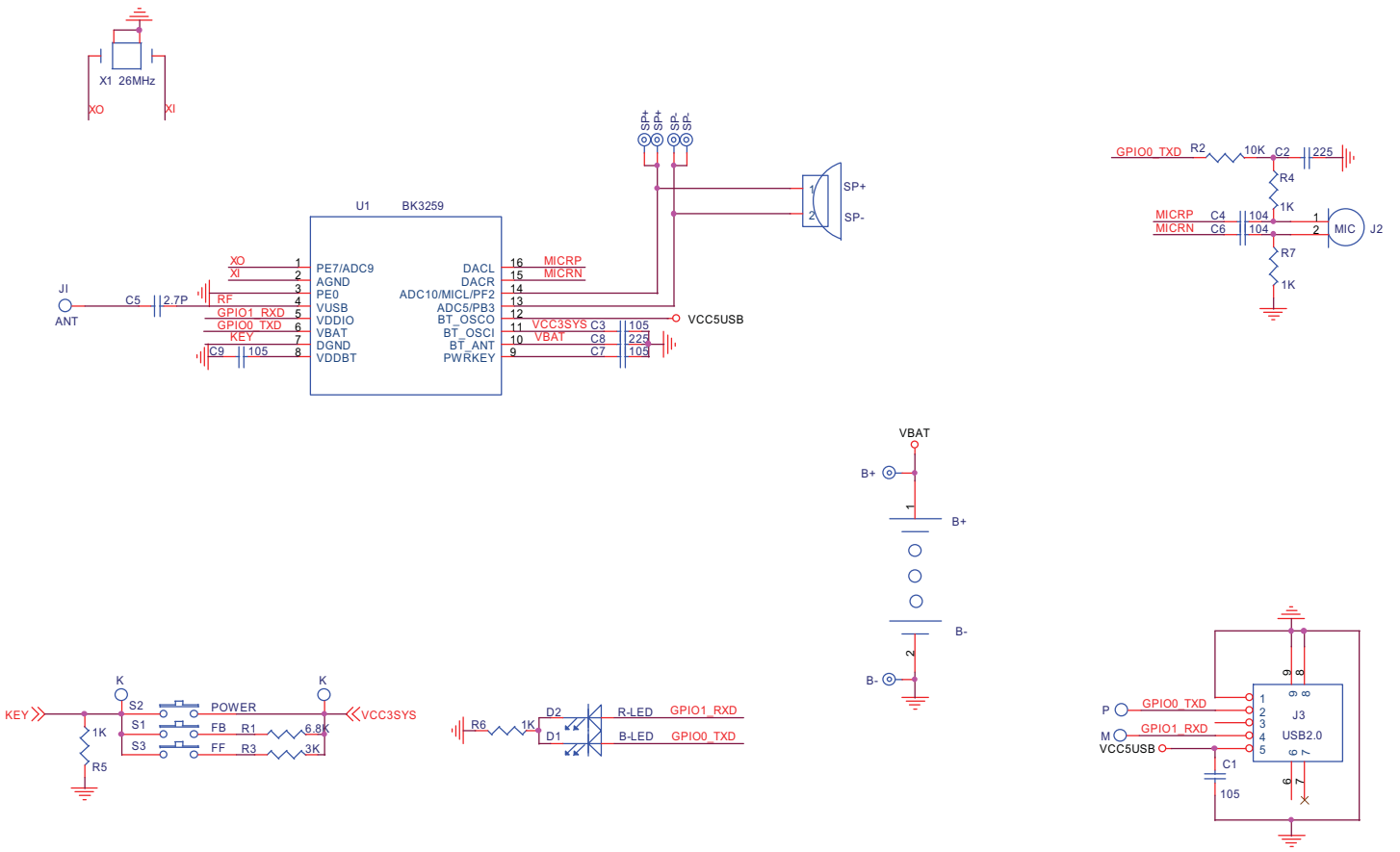
X1 26MHz
XO
XI
U1 BK3259
PE7/ADC9
AGND
PE0
VUSB
VDDIO
VBAT
DGND
VDDBT
DACL
DACR
ADC10/MICL/PF2
ADC5/PB3
BT_OSCO
BT_OSCI
BT_ANT
PWRKEY
MICRP
MICRN
VCC3SYS
VBAT
VCC5USB
SP+
SP-
J1
ANT
C5 2.7P
RF
GPIO1_RXD
GPIO0_TXD
KEY
C9 105
C3 105
C8 225
C7 105
GPIO0_TXD R2 10K C2 225
R4 1K
MICRP C4 104
MICRN C6 104
MIC J2
R7 1K
VBAT
B+
B-
KEY
K
S2 POWER
S1 FB R1 6.8K
S3 FF R3 3K
VCC3SYS
1K
R5
R6 1K
D2 R-LED GPIO1_RXD
D1 B-LED GPIO0_TXD
P GPIO0_TXD
M GPIO1_RXD
VCC5USB
C1 105
J3 USB2.0