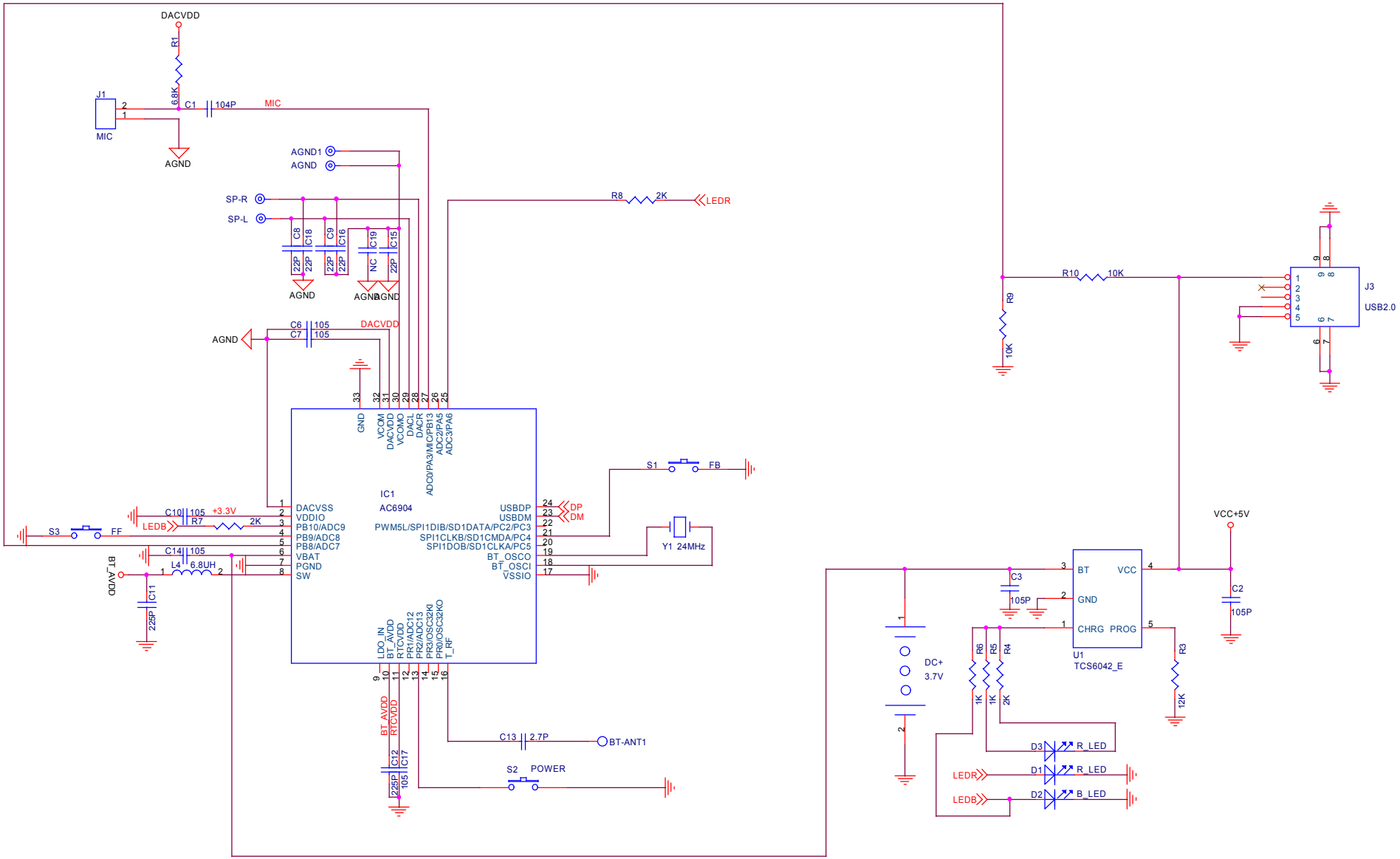

Title		
Size A3	Document Number	Rev 1.0
Date: Thursday, July 20, 2017	Sheet 1 of 1	