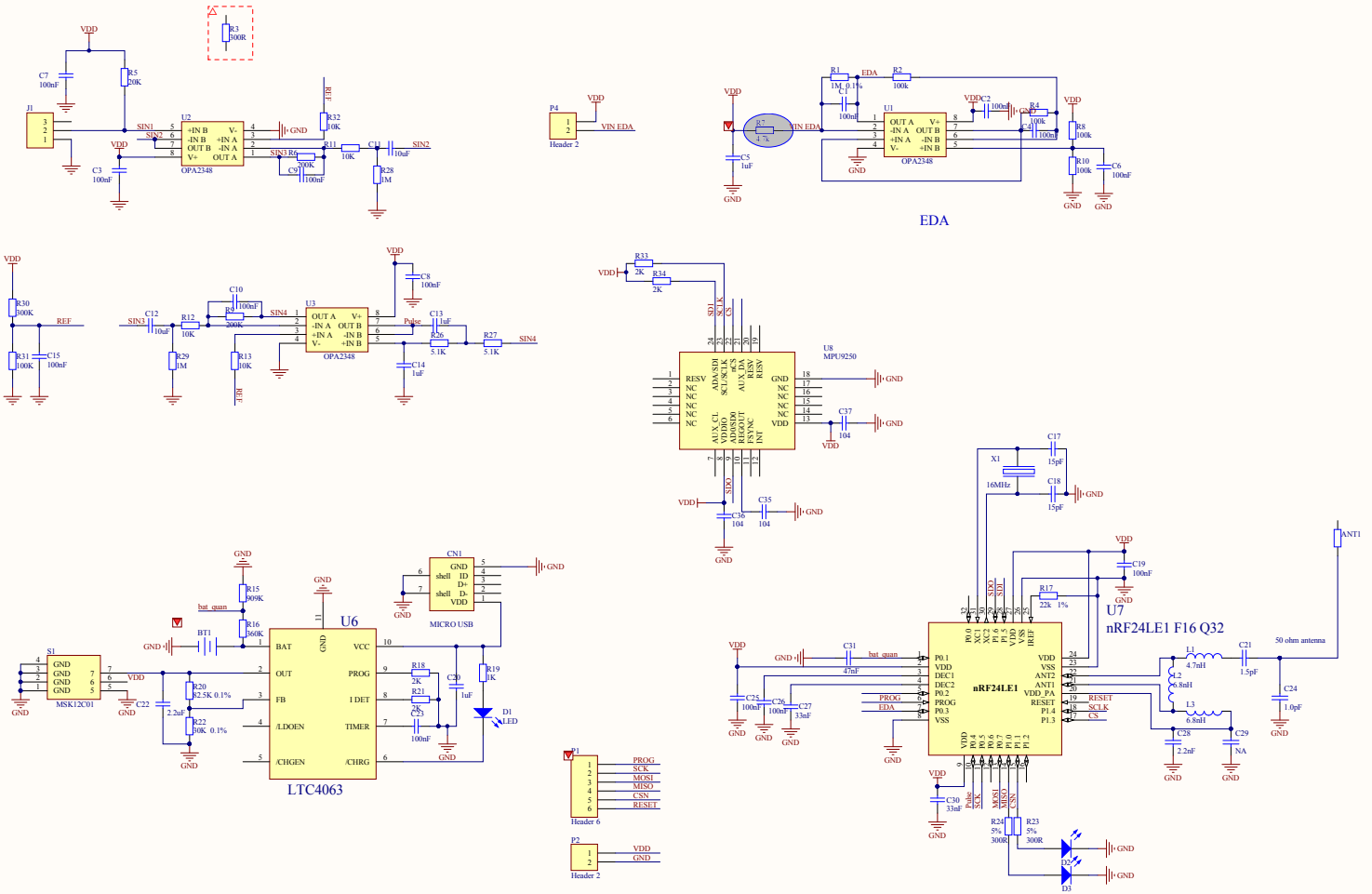

Title		
Size	Number	Revision
A2		
Date: 2014/11/11	Sheet of	
File: D:\01我的工作 设计\.\EDA+PUS+9A.PrjPcb	Drawn By:	