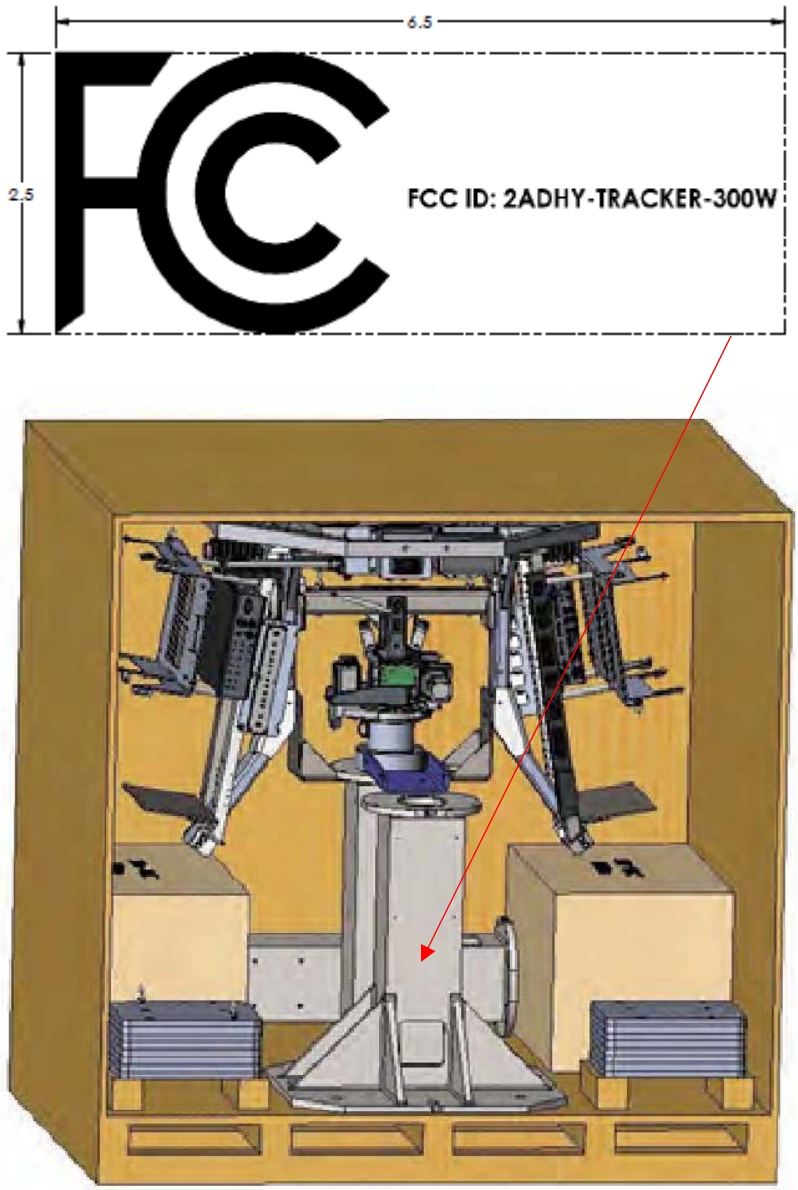Label and Label Location