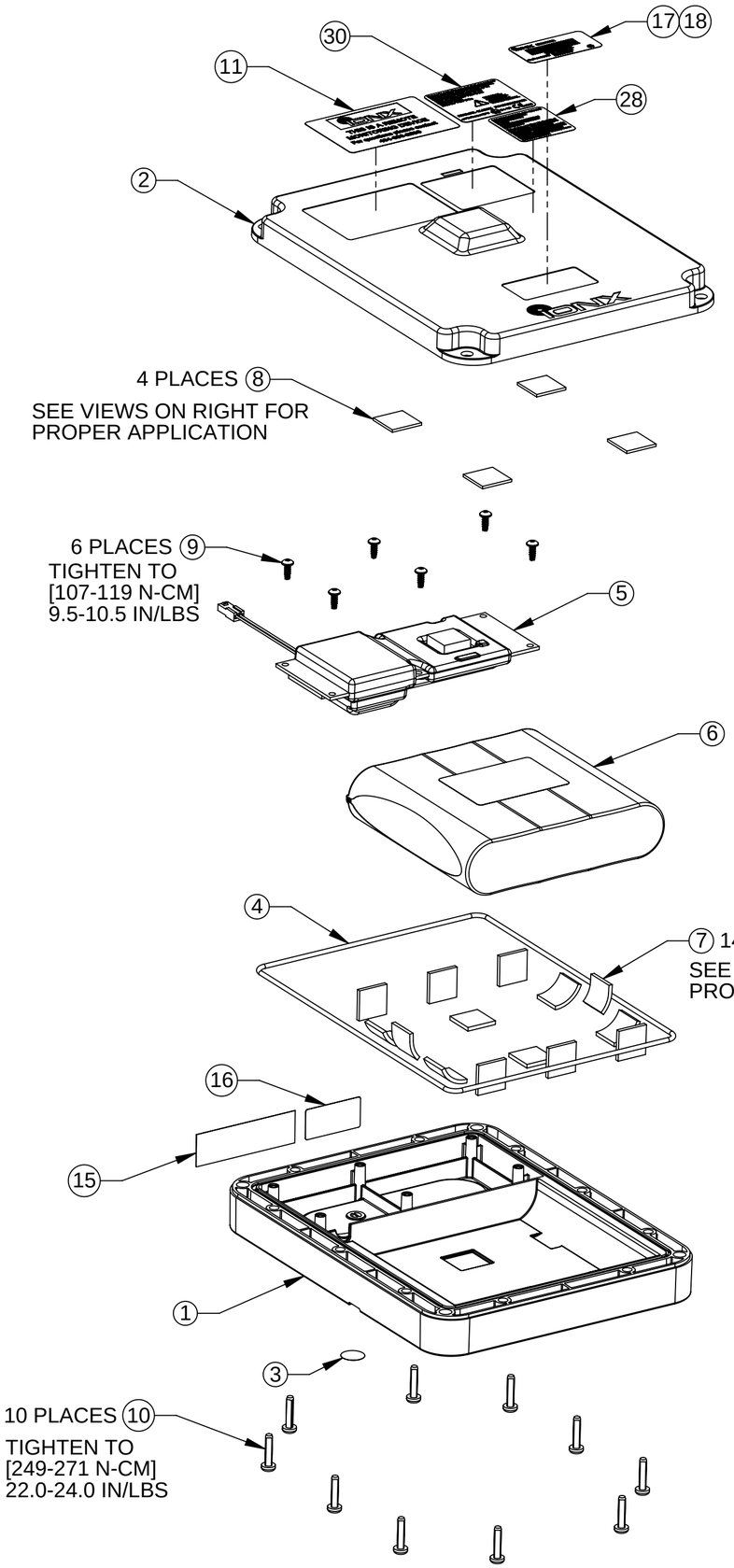

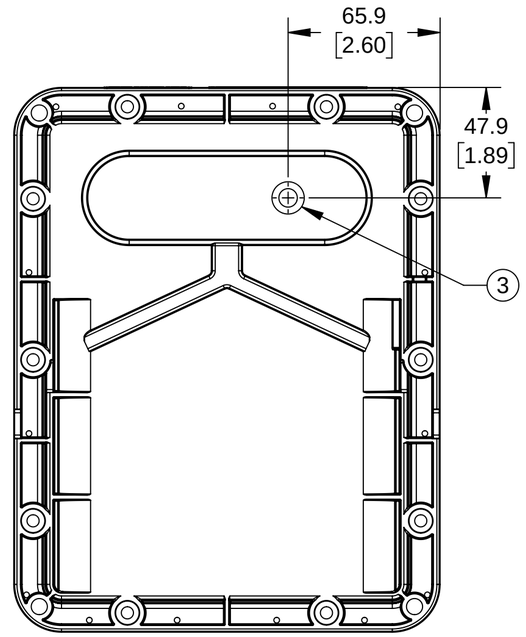

SILICONE FOAM PAD, ITEM NO. 7,
TO BE APPLIED TO THE
ENCLOSURE BASE AS SHOWN.
14 PLACES

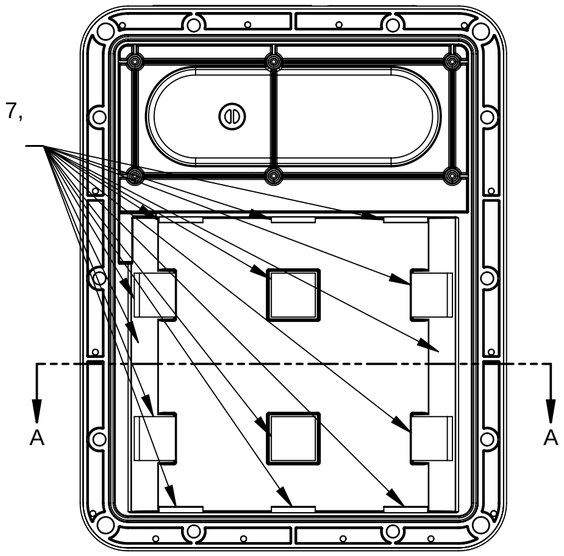

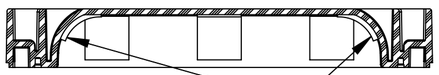

SECTION A-A
SCALE 1 : 2

INSTALL 2 CENTER
PADS AT TOP OF
WALL AS SHOWN

SILICONE FOAMPAD, ITEM NO. 8,
TO BE APPLIED TO THE
ENCLOSURE BASE AS SHOWN.
4 PLACES

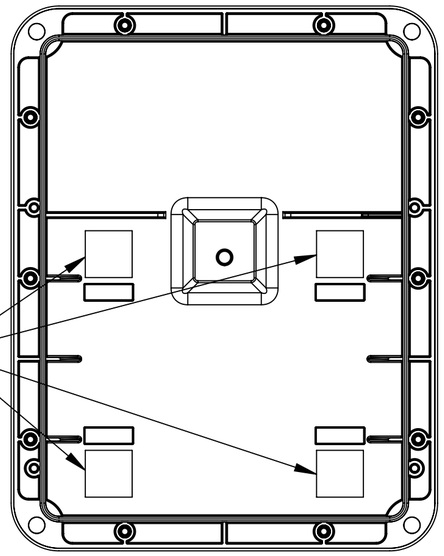

NOTES:

1. SEE WORK INSTRUCTION FOR DETAILED ASSEMBLY INSTRUCTIONS.
2. FINISHED UNITS ARE TO PLACED IN ASSEMBLED CARTON, ITEM NO'S 13 & 14.
3. ALL METALLIC MATERIALS USED DO NOT CONTAIN, BY MASS, MORE THAN 10% IN TOTAL OF ALUMINUM, MAGNESIUM, TITANIUM AND ZIRCONIUM, AND 7.5% IN TOTAL OF MAGNESIUM, TITANIUM AND ZIRCONIUM.
4. NO SUBSTITUTION OF MATERIALS IS PERMISSIBLE WITHOUT PRIOR APPROVAL FROM THE INTRINSIC SAFETY CERTIFICATION BODY.

NOTICE OF CONFIDENTIALITY:
THIS DOCUMENT AND THE INFORMATION CONTAINED IN IT ARE CONFIDENTIAL AND ARE THE PROPERTY OF IONX. THEY MAY NOT BE IN ANY WAY DISCLOSED, COPIED OR USED BY ANYONE EXCEPT AS EXPRESSLY AUTHORIZED BY IONX. THE DOCUMENT SHOULD ALWAYS BE KEPT IN A SECURE PLACE, AND SHOULD BE DESTROYED OR RETURNED TO IONX WHEN IT IS NO LONGER NEEDED.

MATERIAL / FINISH
MATERIAL: -
-
-
COLOR: -
FINISH: -

UNLESS OTHERWISE SPECIFIED :
DIMENSIONS ARE IN MILLIMETERS OR DEGREES
THIRD ANGLE PROJECTION
LINEAR & ANGULAR TOLERANCES
XX ±0.50 XX.X ± 0.20
XX.XX ±0.10 XX.XXX ±0.05
GEOMETRIC DIMENSIONS AND TOLERANCES PER ANSI Y14.5M-1994
DO NOT MEASURE OFF THIS PRINT
PRODUCT:

THIS DRAWING REPLACES: -
REFERENCE PART NO.: -

DRAWN:	JEFF THAWLEY	DATE 7/27/16
CHECKED:	CARL SWARTZ	DATE 3/20/18
PROJECT ENGINEER:	JEFF THAWLEY	DATE 7/26/16

IONX
515 S. FRANKLIN STREET
WEST CHESTER, PA 19382
484-653-2600
WWW.IONXLIVE.COM

TITLE
EDGE E5X EXTENDED LIFE ASSET MONITORING DEVICE

SIZE C | DWG NO. E5X | REV D
SCALE: 2:5 | SHEET 1 OF 1