Level Measurement Expert

Pulse Radar Level Instrument

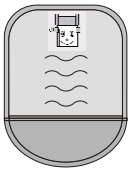

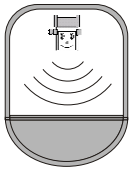

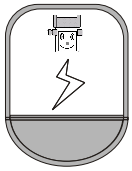

Beijing GODA Instruments Co. , Ltd.
北京古大仪表有限公司

Table of Contents

1. For your safety

• Authorised personal

All operations described in this operating instructions manual must be carried out ouly by trained specialist personnel authorised by the plant operator.

During work on and with the device the required personal protective equipment must always be worn.

• Appropriate use

Operational reliability is ensured only if the instrument is properly used according to the specifications in the operating instructions manual as well as possible supplementary instructions.

• FCC Certification

This device complied with Part 15 of the FCC Rules. Operation is subject to the following two conditions:

(1)this device may not cause harmful interference, and

(2)this device must accept any interference received, including interference that may cause undesired operation.

Changes or modifications not expressly approved by the manufacturer could void the user's authority to operate the equipment.

Warning: User must keep a safety distance of at least 20cm from the antenna.

NOTE: This equipment has been tested and found to comply with the limits for a Class A digital device, pursuant to part 15 of the FCC Rules. These limits are designed to provide reasonable protection against harmful interference when the equipment is operated in a commercial environment. This equipment generates, uses, and can radiate radio frequency energy and, if not installed and used in accordance with the instruction manual, may cause harmful interference to radio communications. Operation of this equipment in a residential area is likely to cause harmful interference in which case the user will be required to correct the interference at his own expense.

2. Measurement Principle

Principle

The extremely narrow microwave pulse emitted by the antenna on radar level instrument can travel at the speed of light and part of its energy, which is reflected off the surface of target medium, is received by the very same antenna. The time lapse between pulse emission and reception by the antenna is proportional to the distance between the surface of target medium and the reference point on antenna. However, due to the fact that the electromagnetic wave is transmitted at extremely high speed, which leads to the tiny time lapse (nanosecond level) and makes it difficult to be identified, GDRD series of radar level instrument have adopted a special demodulation technology, enabling itself to detect the time lapse between pulse emission and reception correctly, and eventually generate accurate measurement result.

Features

The pulse radar level instrument, adopted K band range as transmission frequency, which make this series have specialties as below: Small beam angle, which centralize energy, make GDRD high ability of anti-jamming, hence high accuracy and reliable. Small antenna size, easy to mount and easy to equip extra dust protection. Small blind zone, good accuracy even for small vessels. Shorter wave-length, suitable for small power.

Equipped with advanced microprocessor and unique EchoDiscovery echo processing technology, the radar level instrument can be used under various hazardous process conditions

The pulse radar level instrument, with pulses as its working tool and extremely low emission power, can be mounted on various metal or nonmetal vessels, harmless towards the environment and human beings.

3 Product Overview

	GDRD61	GDRD55
		
Application:	Liquid	Liquid Level measurement in liquids, especially highly erosive liquids
Max Measurement Range::	Common 30m Enhanced 70m	10m
Measurement Accuracy:	±3mm ±10mm	±5mm
Process Temperature:	(-40～100)° C	(-40～130)° C
Process Pressure:	Ordinary pressure	(-0. 1～0. 3)MPa
Signal Output: Power:	(4～20) mA/HART 2-wire(DC24V)	(4～20)mA/HART 2-wire(DC24V)
Display module:	None	
Housing:	Pa66	A
Process Connection:	Lifting frame or 1'NPT	F
Flange Accessories:		L
Antenna:		R

GDRD56	GDRD57
	
Liquid	Liquid
Level measurement in liquids, under certain temperature and pressure, mildly erosive liquids	Level measurement of highly erosive medium under certain pressure/ temperature limit and suitable for
30m	20m
±3mm	±3mm
(-40～80)° C (-40～130)° C (-60～250)° C (-60～400)° C	(-40～150)° C
Normal (-0. 1～4) MPa (-0. 1～40) MPa	(-0. 1～0. 5)MPa
(4～20)mA/HART 2-wire (DC24V)	(4～20)mA/HART 2-wire (DC24V)
Optional	Optional
A	A
H/I/J/K	
L/M/P	
T/V	U

GDRD58	GDRD59
	
Solid strong dew/dust/crystal	Solid Normal Temperature/Normal Pressure
70m ±15mm	15m ±10mm
(-40～80)° C (-40～120)° C (-60～250)° C (-60～400)° C	(-40～80)° C
Normal (-0. 1～4) MPa (-0. 1～40) MPa	Normal
(4～20)mA/HART 2-wire (DC24V)	(4～20)mA/HART 2-wire (DC24V)
Optional	Optional
A	A
H/I/J/K	G
L/M/P	L/M/N
T/V	T

Housing

	
Serial number	A
Material	Aluminium
Specialty	

Process Connection

					
Serial number	F	H	I	J	K
Material	PFA	Stainless Steel	Stainless Steel\\ (Huff)	Stainless Steel	Stainless Steel Flange
Pressure	(-0.1～0.3)MPa	(-0.1～4)MPa	(-0.1～0.5)MPa	(-0.1～4)MPa	(-0.1～40)MPa
Temperature	(-40～130)℃	(-60～150)℃	(-60～130)℃	(-60～250)℃	(-60～400)℃

Flange Accessories

			
Serial number	L	M	P
Material	(PTFE/PP) Flange	Stainless Steel Flange	Stainless Steel Gimbal Flange
Specialty	Rust tolerated	High temp./High Pressure	High temp./Normal Pressure

Antenna

					
Serial number	R	T	U	V	W
Material		Stainless steel	PFA	Stainless steel (PFA shield)	Stainless steel
Specification	Φ44/Length86 Φ44/Length108	Φ48/Length140 Φ78/Length227 Φ98/Length288 Φ123/Length620	Dn80 DN100	Φ98/300 Φ123/625	Φ198 Φ246
Specialty	Normal Temperature	Temperature tolerated/ Pressure tolerated	Rust tolerated/ Pressure tolerated	Normal Temperature/ Normal Pressure	Temperature tolerated/ Pressure tolerated

4. Mounting Requirements

Basic Requirements

There is a certain existing beam angle while the antenna transmitting microwave pulses. There should be no barriers between the lower edge of antenna and surface of measured medium. Therefore it is highly recommended to avoid facilities inside vessels, such asladders, limit switches, heating spirals, struts and etc, during the mounting process. “False echo learning” must be carried out during the installation in this case. Furthermore, microwave beams must NOT intersect the filling streams. Be cautions during the installation: the highest level of target medium must NOT enter into blanking zone; the instrument must keep certain distance to vessel walls; every possible measure needs to be taken to position the instrument so that the direction of antenna emission is perpendicular to the surface of measured medium. The installation of instruments in explosion proof area must abide by relevant local or federal safety regulations. Stainless steel housing should be used for intrinsically safe explosion proof version, which is also applicable in explosion proof areas. The instrument must be connected with ground in this case.

Illustrations

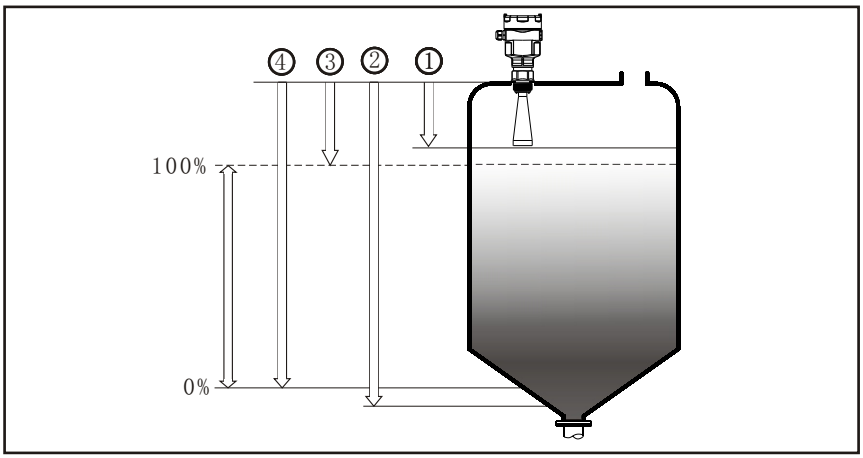

The reference plane is the thread or flange surface

1. Blanking Zone(menu1.9)
2. Empty(menu1.8)
3. Max. Adjustment(menu1.2)
4. Min. Adjustment(menu1.1)

Note：The highest level of measured medium must not enter into vlanking zone while radar level measurement instrument is in operation.

Mounting Position

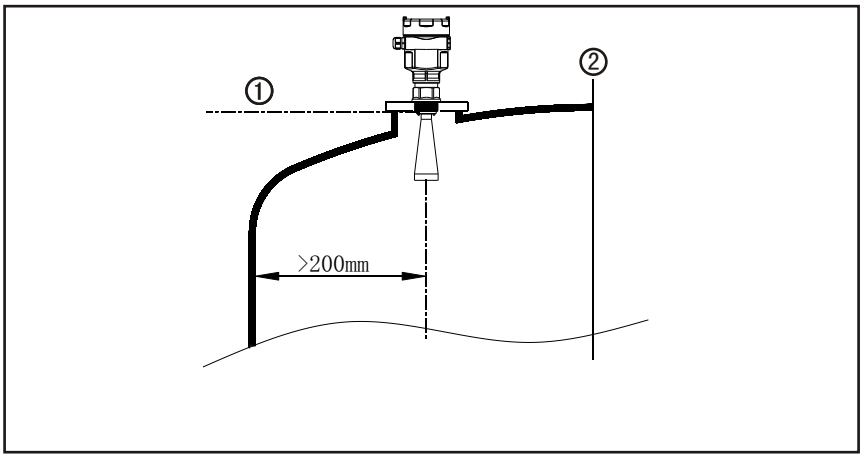

Minium distance of 500mm between instrument and vessel wall during installation

1.Reference Plane
2.Center of Vessel or Symmetrical Axis

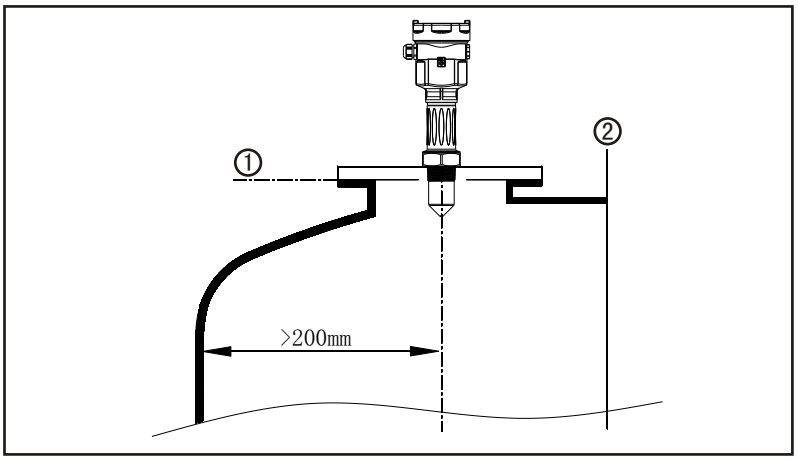

1.Reference Plane
2.Center of Vessel or Symmetrical Axis

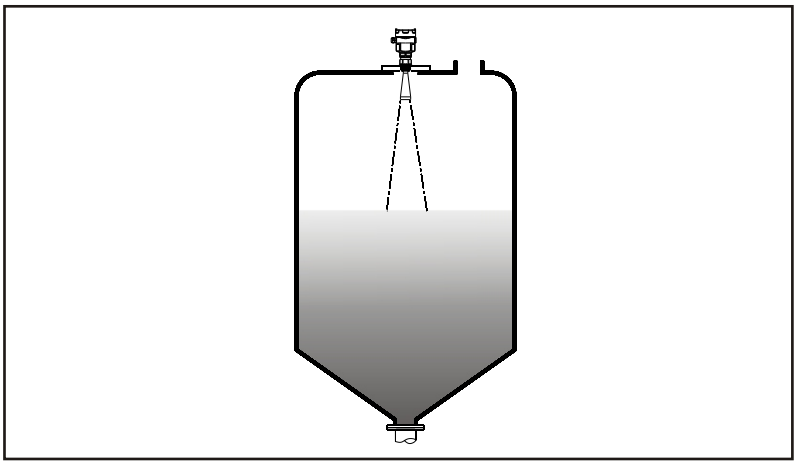

The best mounting position for a conical vessel with flat top is the center of its top, as the effective measurement can reach the bottom of vessel.

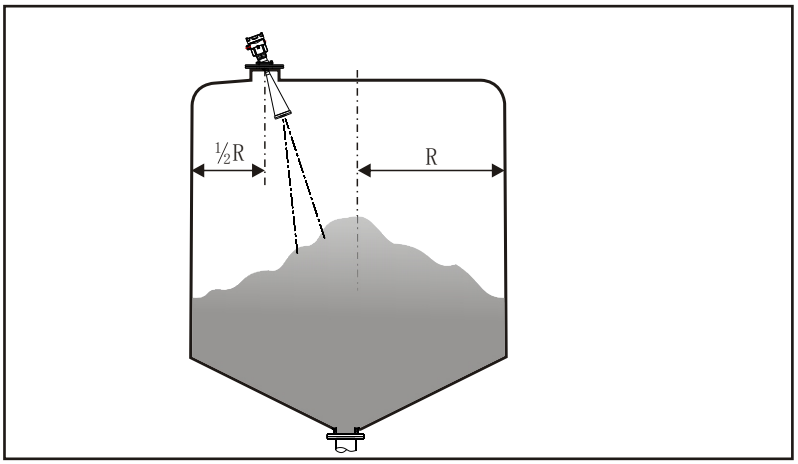

Installation with Gimbal

Damp-proof

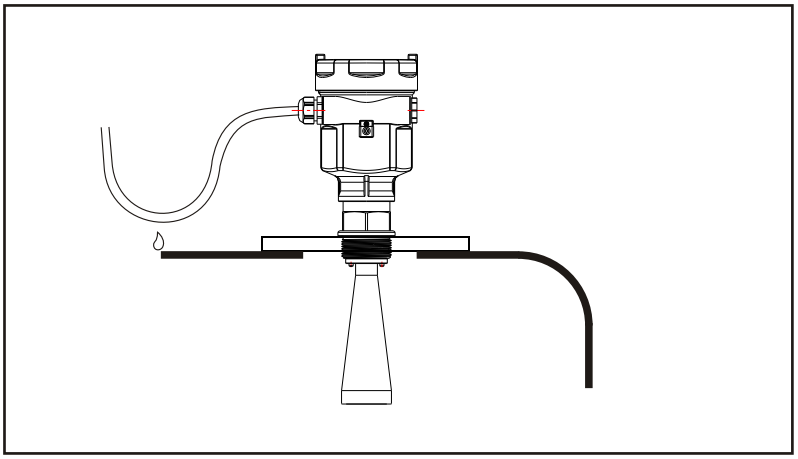

In order to avoid dampness under outdoor or humid indoor conditions or for those instruments mounted on cooling/heating vessels, seal rings used on cables should be screwed tight, plus the cable must be bended downward outside cable entry, indicated on the diagram below

Antenna Extension

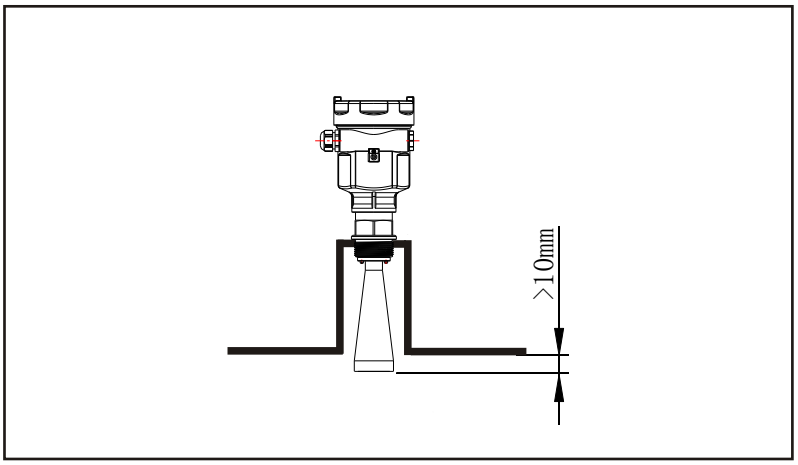

The transducer end must at least protrude 10mm out of socket.

GDRD56 Antenna Extension

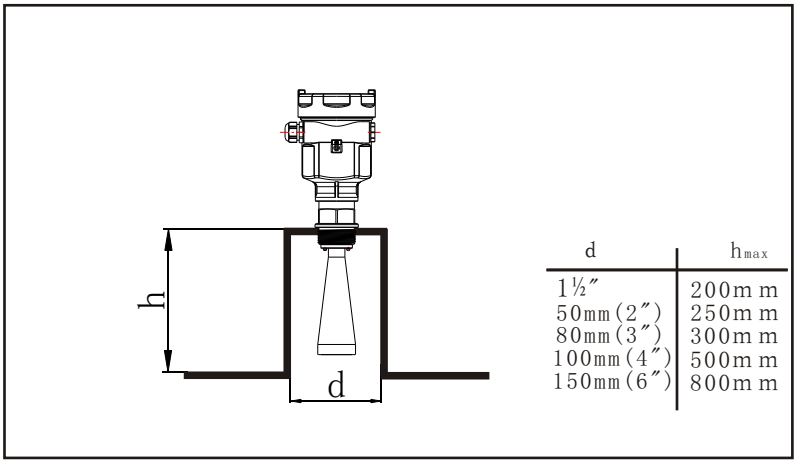

d	hmax
1½″	200mm
50mm(2″)	250mm
80mm(3″)	300mm
100mm(4″)	500mm
150mm(6″)	800mm

If the senser is mounted in a socket extension that is too long, strong false echoes are generated which enterfere with the measurement. Make sure that the horn antenna protrudes out of the socket piece.

GDRD57 Extension pipe demnstration

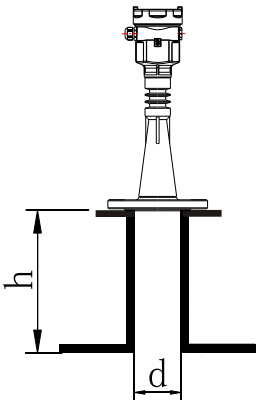

d	h_{max}
50mm(2″)	100mm
80mm(3″)	150mm
100mm(4″)	250mm

- Rights and Wrongs in Mounting

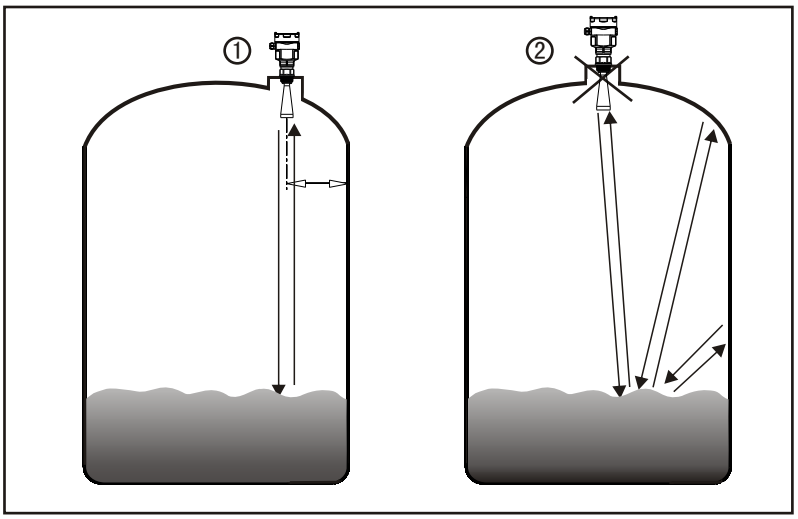

1.Correct
2.Wrong:Instruments are mounted in the center of concave or arched vassel tops, which results in multiple echoes.

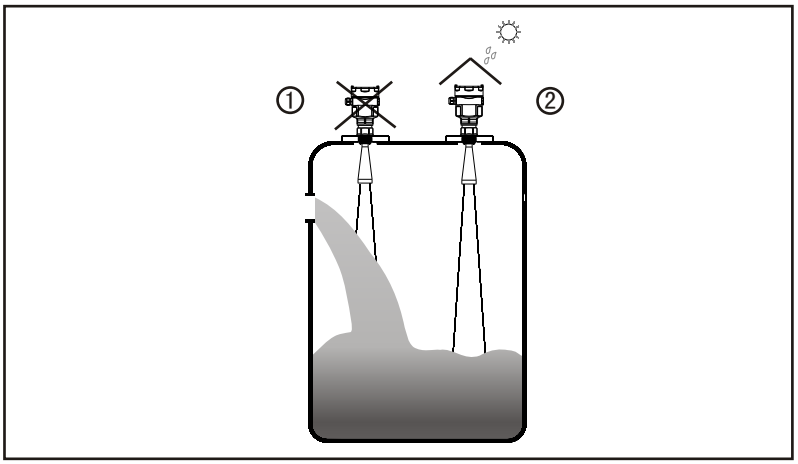

1.Wrong: Mount the instrument in/above filling stream, which results in the measurement of filling stream not the target medium.
2.Correct:

Reflection board installation

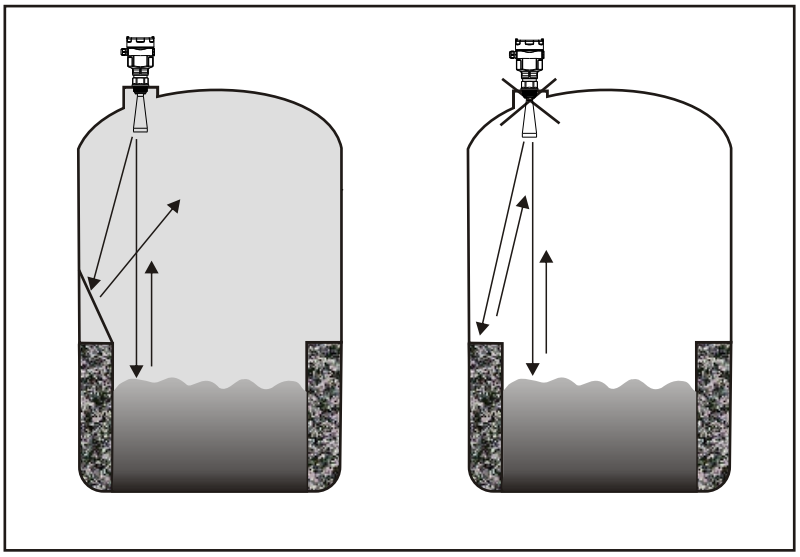

If there are barriers in vessels， it is required to mount baffle-board, by doing this, the echo reflected by the barrier will be reflected out. And “False Echo Storage” will be applied.

Agitator

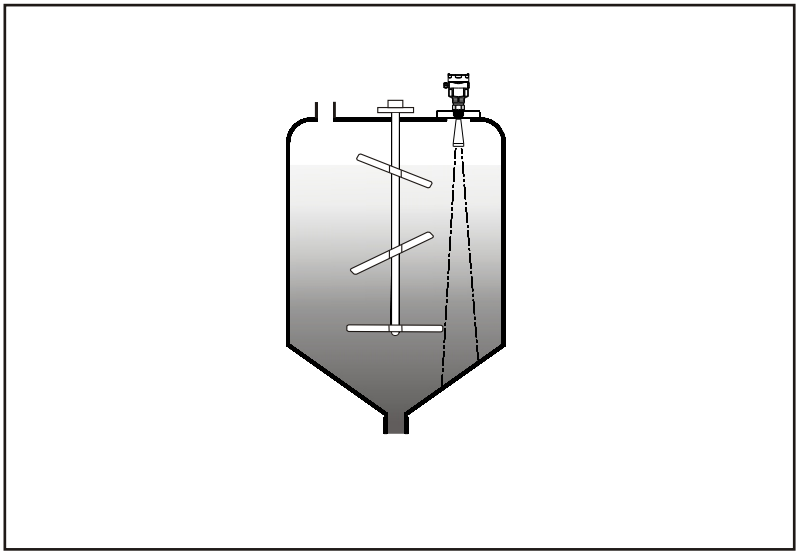

If there are agitators in vessels, instrument must be mounted as far away from agitators as possible. Once installation completed, a "false echo learning" should be carried out while agitators in motion to eliminate negative influence caused by false echo of agitators. You are advised to opt for installation with standpipe if foam or wave is generated due to the action of agitators.

Installation with Standpipe

By using standpipe, the influence of foams can be reduced.

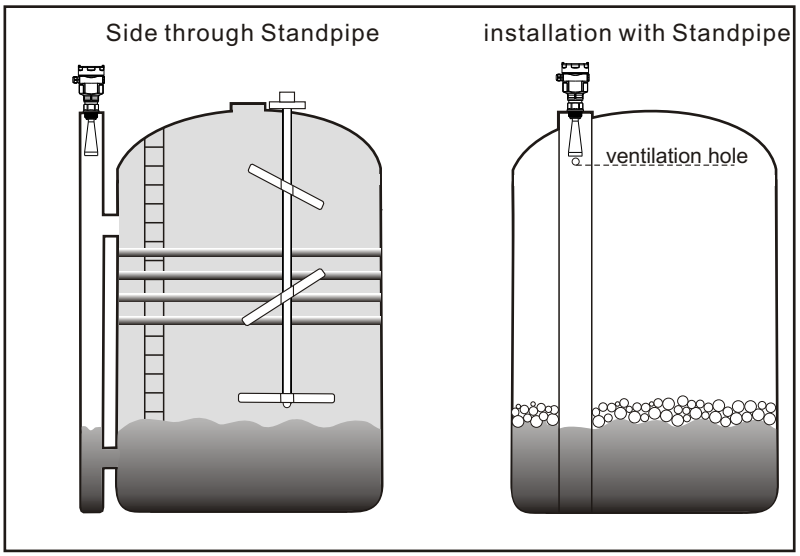

Note: You must NOT mount instrument inside standpipe while measuring adhesive medium.

You are advised to opt for installation with standpipe (or bypass tube) to avoid the influence on measurement caused by barriers inside vessels or foam generation.

It is advised to install antenna inside of the standpipe to avoid the error caused by foam. The minimum inner diameter of standpipe should be 50mm. Avoid large cracks or welding seam when connecting standpipe. False echo storage must be carried out as well in this case.

5 Electrical Connection

Power Supply

20mA/HART(2-Wire)

Power supply and current signal are carried by the same two-wire connection cable. This equipment is not allowed to be connected to public utility power lines.
See the Technical Specifications of this guide for detailed requirement on power supply. A safety barrier should be placed between power supply and instrument for intrinsically safe version.

See the Technical Specifications of this guide for detailed requirement on power supply. Earth-connected current output can be used for standard version of level instruments, while the explosion proof version must be operated with a floating current output. Both instruments and earth terminals should be connected with ground firmly and securely. Normally you can either choose to connect with the earth terminal on vessel or adjacent ground in case of plastic vessels.

Cable Connection

General Introduction

Standard 2-wire cable with outside diameter of 5...9mm, which assures the seal effect of cable entry, can be used as feeder cable. You are recommended to use screened

Shielding & Grounding

The two ends of shielded cable must be connected with earth terminal. The shielded cable must be connected with inner earth terminal directly inside the transducer, while the outside earth terminal on housing must be connected with ground. In the event of earth-connected current, the shielding side of shielded cable must be connected to ground potential via a ceramic capacitor (e.g. : 1μF 1500V) in order to dampen the low frequency grounding current and avoid the disturbance caused by high frequency signals

Wiring Diagram

2-wire

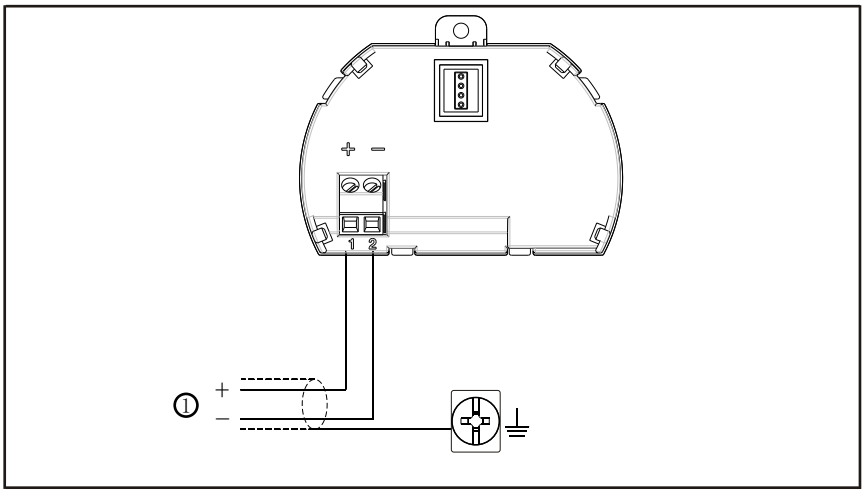

2-wire wiring used for HART
1）Power Supply and Signal Output

Explosion Proof Connection

This product is an intrinsic safety explosion proof version (Exia ⅡC T6 Ga) with stainless steel housing and plastic-encapsulated internal structure aimed to prevent sparks resulted from transducer and circuit malfunction from leaking out. It is applicable for the non-contact continuous level measurement of flammable medium under the level of explosion proof inferior to Exia ⅡC T6 Ga. You are required to use series (intrinsic safety explosion proof: [Exia] ⅡC，voltage of power supply: 24V DC±10%，short-circuit current: 114mA，operating current: 4...20mA) of safety barriers, which are supplementary to this product, for the power supply of this product.

All connection cables must be screened with max. length of 500m. Stray capacitor≤0.1μF/Km,stray inductance ≤1mH/Km. The level measurement instrument must be connected to ground potential and unapproved supplementary devices are not allowed to use.

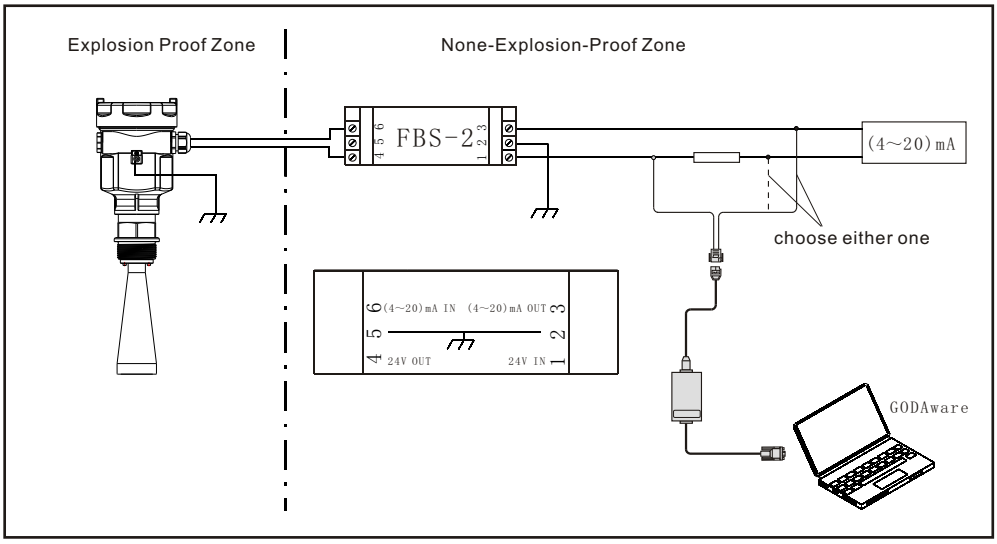

Adjust with GODAware

6 Adjustment Instructions

Adjustment Methods

Three adjustment methods available for GDRD series :
1.Display/Adjustment Module
2.Adjustment software GODAware
3.HART handheld programmer

ViewPoint is a pluggable display/adjustment module. The adjustment can be done through operating with four buttons on ViewPoint. Optional menu operation languages are available for selection. ViewPoint is only used for display after adjustment in that the measurement results can be seen clearly through the glass window.

Display/Adjustment Module

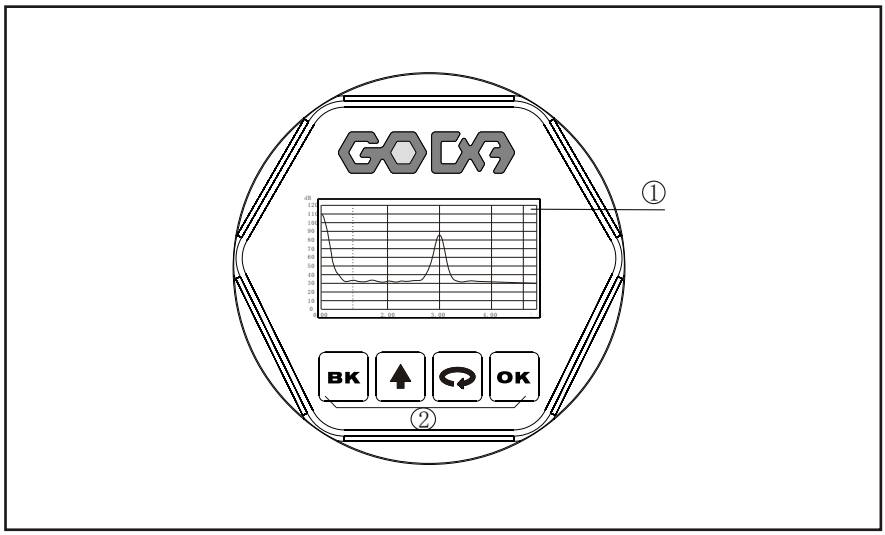

1 LCD 2 Adjustment Keypad

[OK]Keypad
-Enter programming mode;
-Confirm programming options;
-Confirm modifications to parameters.

[ ]Keypad
-Choose programming options;
-Choose the digit of parameters to edit;
-Display the contents of parameters.

[ ]Keypad
-Modify parameter values.

[BK]Keypad
-Programming mode exit;
-Return to higher menu level.

Shortcut
[BK]Display Echo wave

GODAware

Connect with another unit throuth HART.

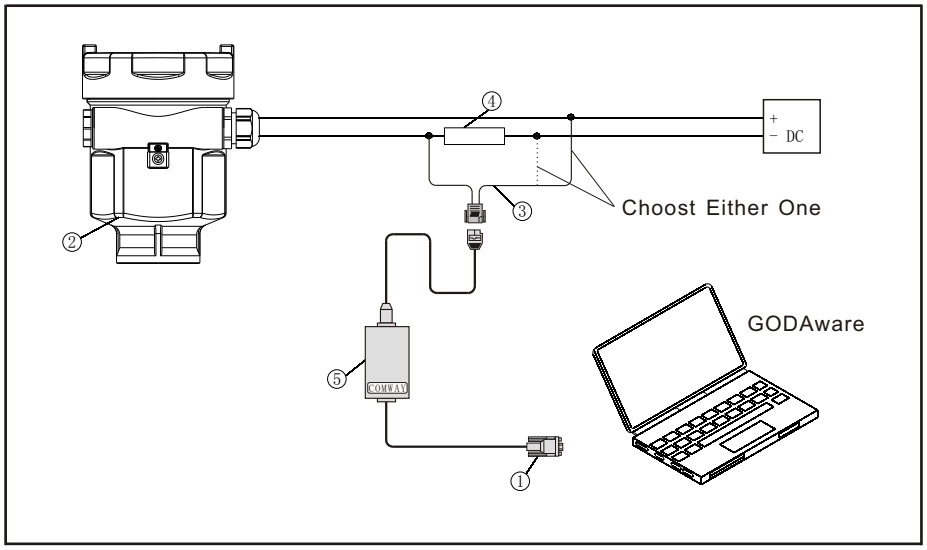

1 RS232 Connect Cable/USB port
2 GDRD series
3 HATR pont adapter used on COMWAY convertor
4 250 ohm Resistance
5 COMWAY Convertor

Connect with another unit throuth I²C.

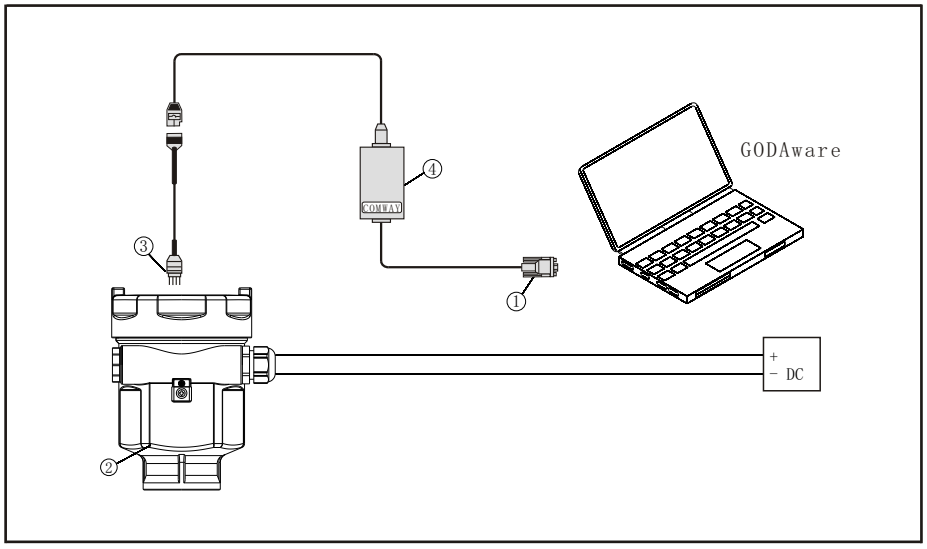

1 RS232 Connect Cable/USB port
2 GDRD series
3 I²C adapter pont used on MOMWAY convertor
4 COMWAY Convertor

HART Handheld Programmer

Adjust GDRD series with HART Handheld Programmer

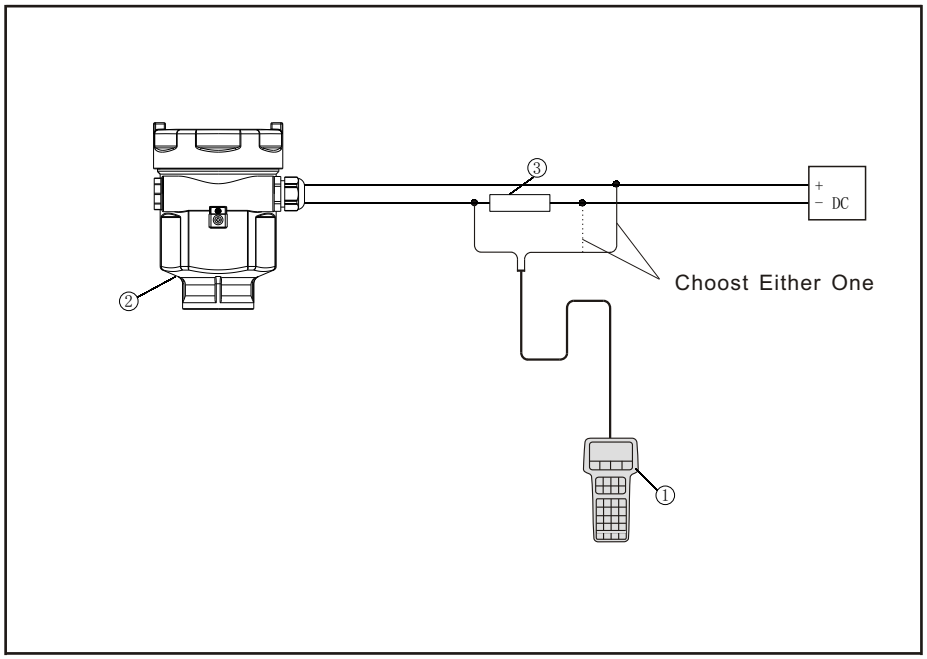

1 HART Handheld Programmer

2 GDRD series

3 250 ohm Resistance

7 Dimension（Unit：mm）

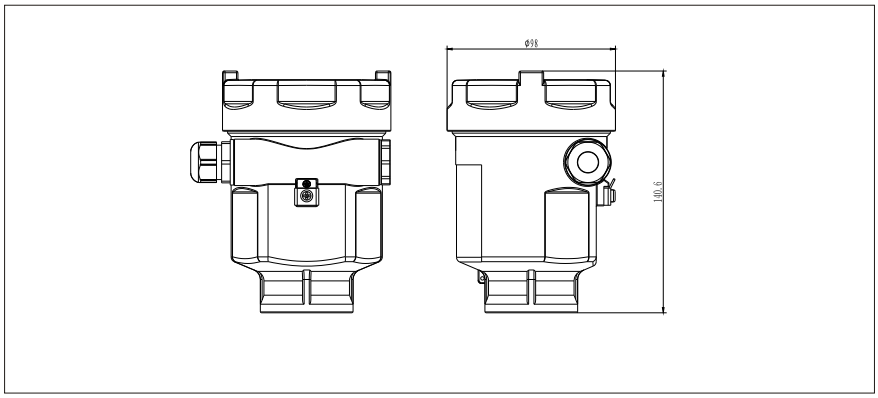

Housing
Material：AL/PBT/316L

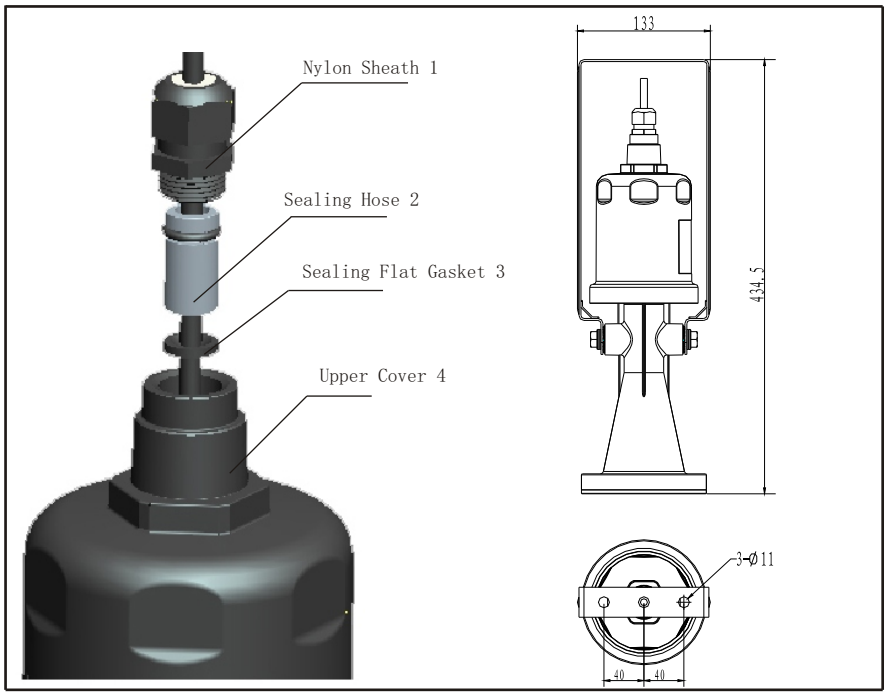

GDRD61

Note: To install from 4 to 1.
To remove from 1 to 4.

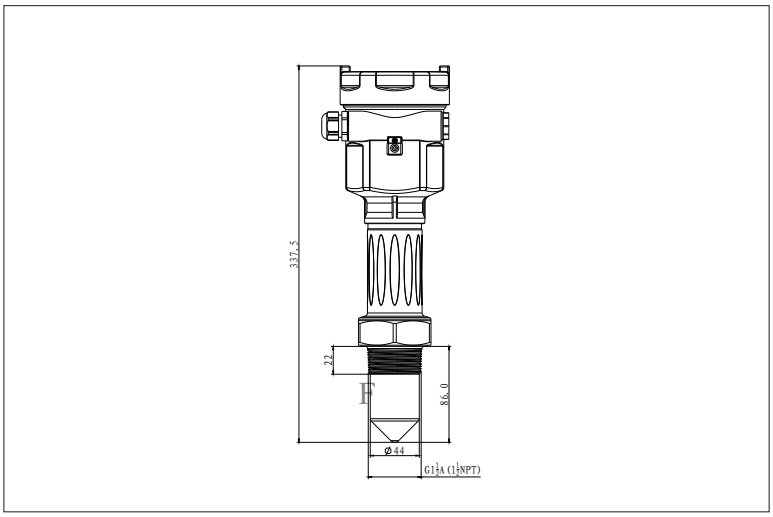

GDRD55 Threaded Vision

GDRD56 Threaded Vision

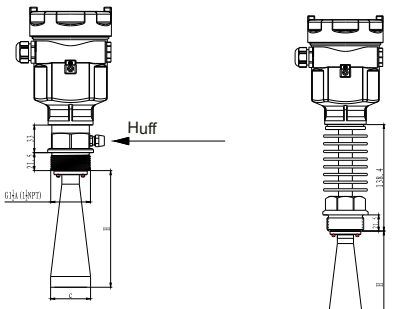

c	H(316L)	H(316L Shiele)
Φ48	140	
Φ78	227	
Φ98	288	300
Φ123	620	625

GDRD57 Flange Version

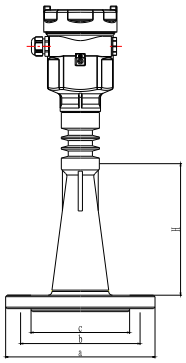

	a	b	c	H
DN80 PN1.6	Φ200	Φ160	Φ132	174
DN100 PN1.6	Φ220	Φ180	Φ156	260

GDRD58 Threaded Vision

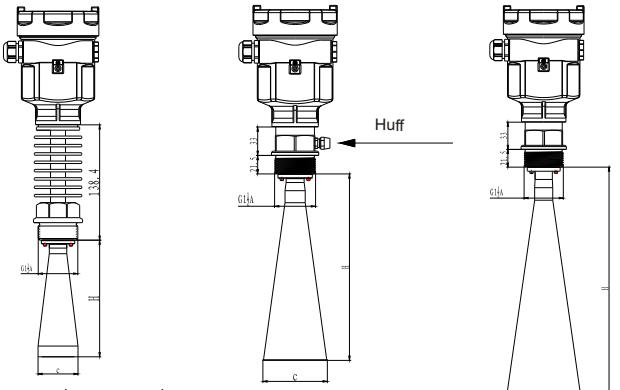

c	H(316L)	H(316LShiele)
Φ48	140	–
Φ78	227	–
Φ98	288	300
Φ123	620	625

GDRD58 Gimbal Flange

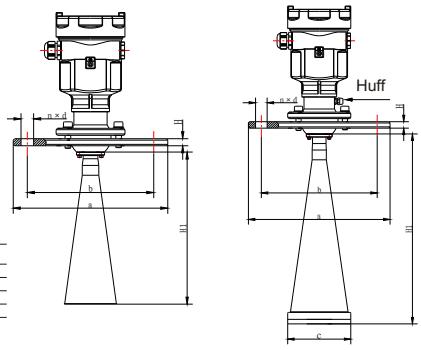

c	H1(316L)	H1(316L Shield)	
Φ48	140	–	–
Φ78	227	–	–
Φ98	288	300	–
Φ123	620	625	–

	a	b	H	d
DN 100/4"	220mm	180mm	11.5mm	8xΦ18mm
DN 125/5"	250mm	210mm	11.5mm	8xΦ18mm

GDRD58/59 Threaded Vision

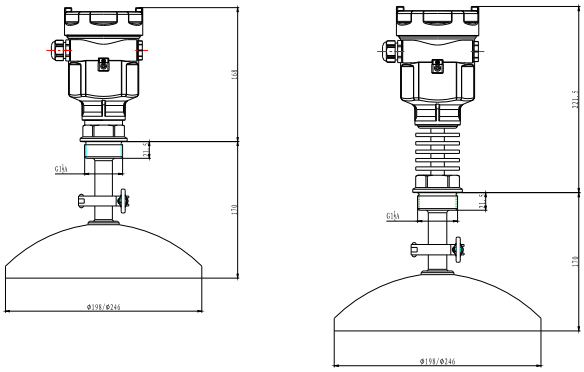

GDRD58/59 Gimbal Flange

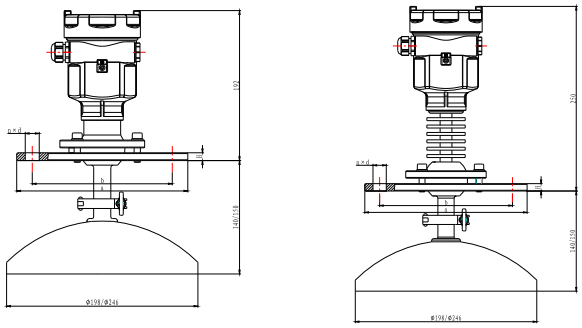

	a	b	H	d
DN 100/4″	220mm	180mm	10mm	4× Φ18mm
DN 125/5″	250mm	210mm	10mm	4× Φ18mm
DN 150/6″	285mm	240mm	10mm	4× Φ22mm
DN 200/8″	340mm	295mm	10mm	4× Φ22mm
DN 250/10″	405mm	355mm	10mm	4× Φ26mm

8 Technical Specifications

General Parameters

series/Type	GDRD55	GDRD56	GDRD57	GDRD58	GDRD59	GDRD61
Process Connection	ThreadG1½A	ThreadG1½A		ThreadG1½A	ThreadG1½A	Lifting Frame
	Thread1½NPT	Thread1½NPT	Flange 316L	Flange 316L	Flange 316L	Thread 1″NPT
				Thread1½NPT	Thread1½NPT	
Material	PP/PFA	Stainless Steel 316L PFA	PFA	Stainless Steel316L PFA	Stainless Steel316L PFA	Aluminum PP

Housing	Aluminium,Stainless Steel 316L
Seal ring between housing and housing cover	Silicone
ViewPoint window on housing	Polycarbonate
Ground terminal	Stainless Steel

Weight

Weight	
-GDRD61	1. 6kg
-GDRD55	1kg（Depend on process connections and housings）
-GDRD56	2kg（Depend on process connections and housings）
-GDRD57	3kg（Depend on process connections and housings）
-GDRD58	7kg（Depend on process connections and housings）
-GDRD59	2kg（Depend on process connections and housings）

Power 2-wire

Standard Version	(21. 6～26. 4)V DC
Power Consumption	max.22.5mA
Ripple Allowed	
—<100Hz	Uss<1V
—(100～100K)Hz	Uss<10mV

Parameters on Cable

Cable Entry/Plug	One cable entry of M20x1. 5（cable diameter of 5～9m）, one binding of M20x1. 5
Spring Connection Terminal	Applicable for cables with cross section of 2. 5mm^2

Output

Output Signal	4. . . 20mA/HART
Resolution	1. 6μA
Fault Signal	Constant current output: 20. 5mA; 22mA; 3. 9mA
-2-wire load resistance	See diagram below
Integration Time	0. . . 40sec, adjustable

- Characteristic parameter

Blanking Distance	End of Antenna	
Max Measurement Distance		
	-GDRD55	10m（liquid）
	-GDRD56	30m（liquid）
	-GDRD57	20m（liquid）
	-GDRD58	70m（solid）
	-GDRD59	15m（solid）
	-GDRD61/61L	30m/70m（liquid）
Measurement Interval	About 1sec（Depend on parameter settings）	
Adjustment Time	About 1sec（Depend on parameter settings）	
Resolution of Display	1mm	
Accuracy	See the diagram below	
Temperature for Storage/Transport	(-40～100)℃	
Process Temperature （Probe）		
	-GDRD55	(-40～130)℃
	-GDRD56	(-60～400)℃
	-GDRD57	(-40～150)℃
	-GDRD58	(-60～400)℃
	-GDRD59	(-40～200)℃
	-GDRD61	(-40～100)℃
Relative Humidity	<95%	
Pressure	Max. 40MPa	
Vibration Proof	Mechanical vibration10m/s 10m^2/s， 10～150Hz	

GDRD61

Accuracy See the diagram below

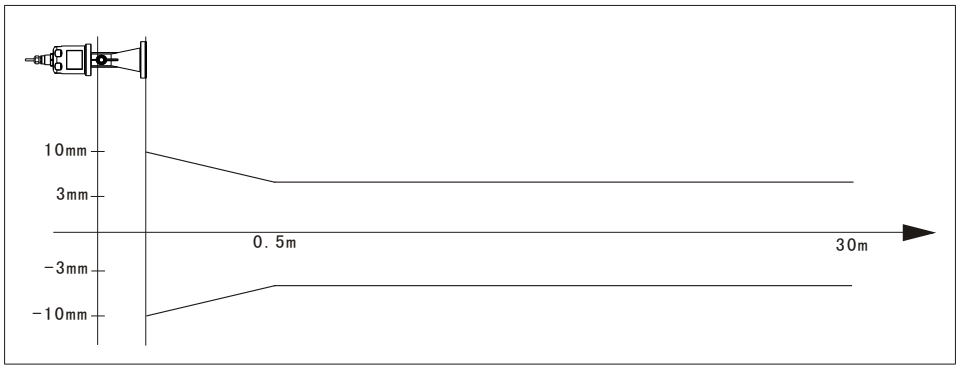

GDRD55

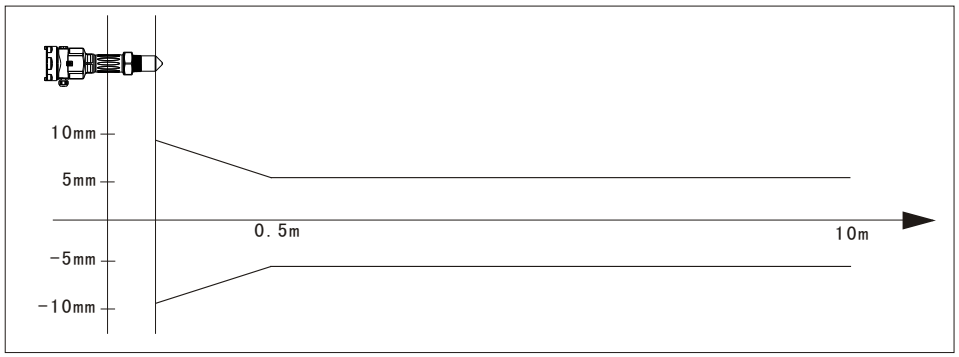

Accuracy See the diagram left

1) The generation of accurate measurement results needs longer time than usual in the event of drastic level changes(mx. Error 10%).

GDRD56

Accuracy See the accuracy illustration diagram below

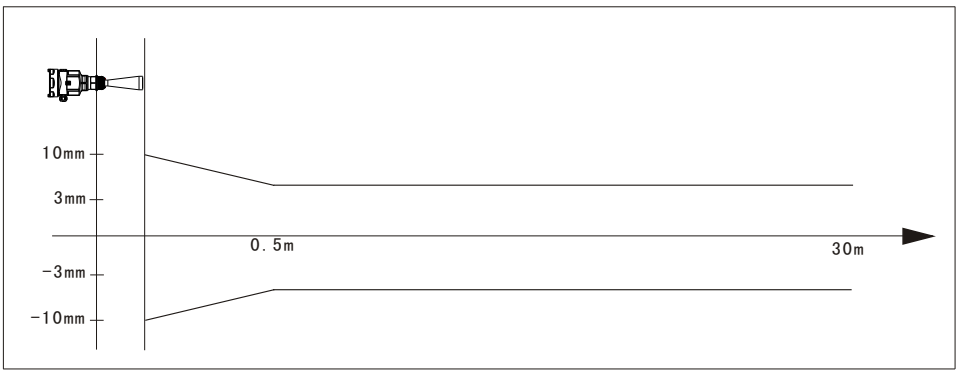

GDRD57

Accuracy See the accuracy illustration diagram below

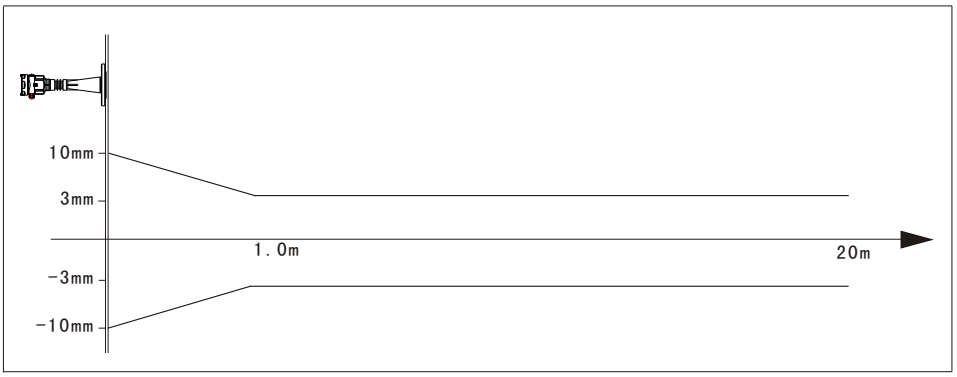

GDRD58

Accuracy See the accuracy illustration diagram below

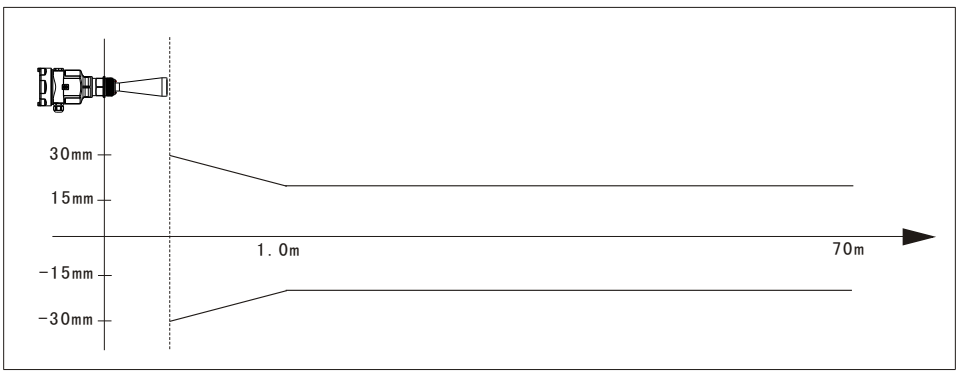

Accuracy See the accuracy illustration diagram below

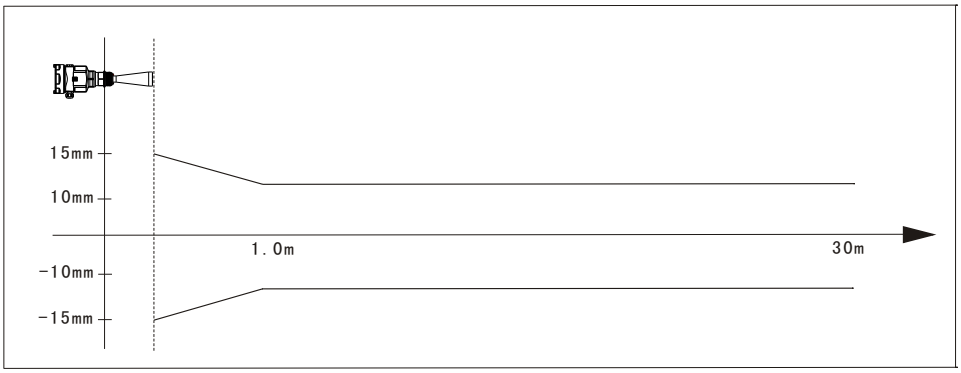

9 Selection & Ordering Information

- GDRD55

Explosion Proof Approval
P Standard I Intrinsically Safe（Exia IIC T6 Ga）
Shape of Antenna/Material
B (R)Airproof Horn Φ44mm/L86 N (R)Airproof Horn Φ44mm/L108
Process Connection/Material
GP (F)Thread G1½A NP (F)Thread 1½NPT
Length of Vessel Socket
A NO
Electronic
B (4～20)mA/HART2-Wire
Housing/Protection
A Aluminium/IP67
Cable Entry
M M20x1.5 N ½NPT
Display/Programming
A Yes X No

GDRD56

Explosion Proof Approval

P Standard
I Intrinsically Safe（Exia IIC T6 Ga）

Shape of Antenna/Material

B (T)Horn Φ48mm/L140/Stainless Steel 316L
C (T)Horn Φ78mm/L227/Stainless Steel 316L
H (T)Horn Φ98mm/L288/Stainless Steel 316L
J (T)Horn Φ123mm/L620/Stainless Steel 316L
Z (Z)Horn Φ78mm/Flexible/Stainless Steel 316L

Process Connection/Material

GP (H)thread G1½A/Stainless Steel 316L
GA (H)thread 1½NPT/Stainless Steel 316L
GB (G)thread G1½A/PP
GC (J)thread G1½A/Stainless Steel 316L/temperature(-60～250)℃
GE (I)thread G1½A/Stainless Steel 316L(Huff)

Flange/Material

Material / Spec. Code	PP(L)	PTFE(L)	Stainless Steel(M)
DN50	FA	FB	FC
DN80	GA	GB	GC
DN100	HA	HB	HC
DN125	IA	IB	IC

F0 No

Seal/Process Temperature

2 Viton(-60～150)℃
3 Kalrez(-60～250)℃
4 Graphite(-60～400)℃

Electronic

B (4～20)mA/HART 2-Wire

Housing/Protection

A Aluminium/IP67

Cable Entry

M M20x1.5
N ½NPT

Display/Programming

A Yes
X No

- GDRD57

Explosion Proof Approval
P Explosion Proof Approval I Intrinsically Safe（Exia IIC T6 Ga）
Shape of Antenna/Material
C (U)Stainless Steel&PFA Flange DN80 D (U)Stainless Steel&PFA Flange Dn100
Electronic
B (4～20)mA/HART 2-Wire
Housing/Protection
A Aluminium/IP67
Cable Entry
M M20x1.5 N ½NPT
Display/Programming
A Yes X No

GDRD58

Explosion Proof Approval

P Explosion Proof Approval
I Intrinsically Safe（Exia IIC T6 Ga）

Shape of Antenna/Material

C (T) Horn Φ78mm/L227/Stainless Steel316L
H (T) Horn Φ98mm/L288/Stainless Steel316L
J (T) Horn Φ123mm/L620/Stainless Steel316L
M (V) Horn Φ98mm/L300/Stainless Steel316L/PFA Shield
P (V) Horn Φ123mm/L625/Stainless Steel316L/PFA Shield
Q (W)Paraboloid Φ198mm/Stainless Steel316L
R (W)Paraboloid Φ246mm/Stainless Steel316L
Z (Z)Horn Φ78mm/Flexible/Stainless Steel316L

Process Connection/Material

GP (H) Thread G1½A/Stainless Steel316L
GA (H) Thread 1½NPT/Stainless Steel316L
GB (G) Thread G1½A/PP
GC (J) Thread G1½A/Stainless Steel316L/ Temperature (-60～250)℃
GE (I) Thread G1½A/Stainless Steel316L (Huff)
GF (E) Thread G1½A/Stainless Steel316L/Temperature (-60～250)℃

Flange/Material

Material / Spec. Code	PP (L)	PTFE (L)	Stainless Steel (M)	Gimbal Flange (PP) (N)	Gimbal Flange (Stainless Steel) (P)
DN50	FA	FB	FC	-	-
DN80	GA	GB	GC	-	-
DN100	HA	HB	HC	HD	HE
DN125	IA	IB	IC	ID	IE

F0 No

Seal/Process Temperature

2 Viton (-60～150)℃
3 Kalrez (-60～250)℃
4 Graphite (-60～400)℃

Electronic

B (4～20) mA/HART 2-Wire

Housing/Protection

A Aluminium/IP67

Cable Entry

M M20x1.5
N ½NPT

Display/Programming

A Yes
X No

GDRD59

Explosion Proof Approval

P Explosion Proof Approval
I Intrinsically Safe（Exia IIC T6 Ga）

Shape of Antenna/Material

C (T) Horn Φ78mm/L227/Stainless Steel316L
H (T) Horn Φ98mm/288/Stainless Steel316L
J (T) Horn Φ123mm/L620/Stainless Steel316L
M (V) Horn Φ98mm/L300/Stainless Steel316L/PFA Shield
P (V) Horn Φ123mm/L625/Stainless Steel316L/PFA Shield
Q (W)Parabolic Φ198mm/Stainless Steel316L
R (W)Parabolic Φ246mm/Stainless Steel316L
Z (Z)Horn Φ78mm/Flexible

Process Connection/Material

GP (H) Thread G1½A/Stainless Steel316L
GA (H) Thread 1½NPT/Stainless Steel316L
GB (G) thread G1½A/PP
GE (I) Thread G1½A/Stainless Steel316L (Huff)
GF (E) Thread G1½A/Stainless Steel316L/Temperature (-60～250)℃

Flange/Material

Material / Spec. Code	PP(L)	PTFE(L)	Stainless Steel(M)	Gimbal Flange(Stainless Steel)(P)
DN50	FA	FB	FC	-
DN80	GA	GB	GC	-
DN100	HA	HB	HC	HE
DN125	IA	IB	IC	IE
DN150	JA	JB	JC	JE
DN200	KA	KB	KC	KE
DN250	LA	LB	LC	LE

F0 No

Seal/Process Temperature

2 Viton (-60～80)℃
3 Kalrez (-60～250)℃

Electronic

B (4～20) mA/HART 2-Wire

Housing/Protection

A Aluminium/IP67

Cable Entry

M M20x1.5
N ½NPT

Display/Programming

A Yes
X No

GDRD61

Explosion Proof Approval
P Standard(max measurement range of 30m)
I Intrinsically Safe Exia IIC T6 Ga
L Enhanced(max measurement range of 70m)
Shape of Antenna/Material
P Horn Φ78mm/L221/PA66
Process Connection/Material
GB THREAD 1″ NPT PP
GD LIFTING FRAME
Electronic
B (4～20)MA/HART
Housing/Protection
A IP68
Programming
A Yes
X No
Sunshield
A Yes
X No
Cable
A Standard twin-core shielded (leagth of 10m) B Length of twin-core shielded(length:X m) C Length of 7-core shielded lead(length:X m)

10 Application Questionnaire

Approvals

☐ Standard Version ☐ Intrinsically Safe Version（Exia IIB T6 Ga） ☐ Intrinsically Safe Version（Exia IIC T6 Ga）
☐ Intrinsically Safe Version+Explosion Proof（Exdia [ia Ga] IIC T6 Gb）

Measured Medium

Name _____
Condition ☐ Liquid ☐ Solid Form ☐ Mass ☐ Particle ☐ Dust）
Temperature: Min._____ ◦C Norm._____ ◦C Max._____ ◦C
Surface ☐ Flat ☐ Turbulent ☐ Agitated Vorte
Dielectric Constant ☐ εr<3 ☐ εr>3

Atmosphere

Atmosphere ☐ Form ☐ Foam ☐ Dust ☐ Deposit ☐ Vapour
Atmosphere Pressure Min._____ Norm._____ Max._____

Vessel

Shape of Top ☐ Flat ☐ Arch ☐ Conical ☐ Horizontal
Height _____ Diameter _____
Critical Information
Nozzle Length:_____ Nozzle Diameter:_____ Measurement Range:_____

Process Connection

Thread（☐ G¾A ☐ ¾NPT ☐ G1A ☐ G1A、M105x2 ☐ G1½A ☐ 1½NPT ☐ G2A ）
☐ Flange（DN= ） ☐ Swivelling Holder

Installation

Mode: ☐ Top ☐ Side
Filling Stream inlet position and installation position （Please specify in the diagram below）

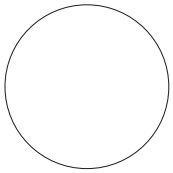

Circular Vessel

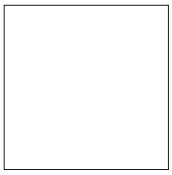

Square Vessel

Communication

☐(4～20) mA/HART

Display

☐ Yes ☐ No

Customer Information

Contact: _____
Company: _____
Address: _____
P. C.: _____ Tel: _____
Email: _____ Fax: _____

Please give brief explanation on the application of instrument:

Date: _____

Beijing GODA Instruments Co. , Ltd.

Beijing GODA Instruments Co., Ltd.
Add: Management Address:3RD Floor,Block B,
Hongxianhong base,Beiqijia Town,Changping
District,Beijing.
Tel: (010) 89759341 89759342 89759343 89759344
Fax: (010) 89759327
PC:102209
Website:www.godacn.com
Email:sales@godacn.com

Sales Dept Of Beijing GODA Instruments Co., Ltd.
Add: Room1303, Block D, Ocean International Center,
No 62 Middle Of east 4th ring, Chaoyang Dist.,
Beijing,100025, China

Tel: (010) 59648788 (Ext.8)
Fax: (010) 59648789
PC: 100025

Edition: GD/200902