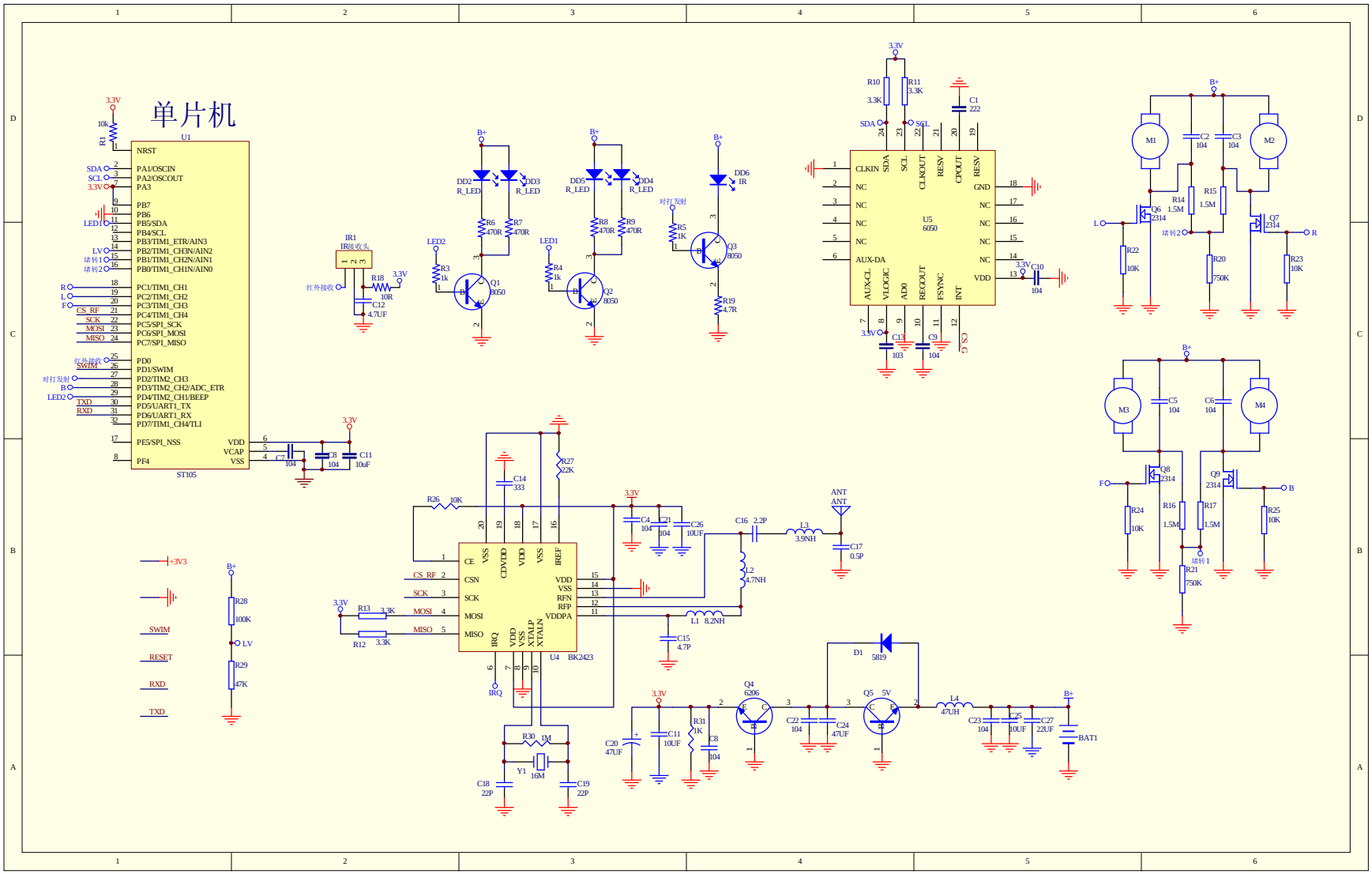
单片机
U1
ST105
NRST
PA1/OSCIN
PA2/OSCOUT
PA3
PB7
PB6
PB5/SDA
PB4/SCL
PB3/TIM1_ETR/AIN3
PB2/TIM1_CH3N/AIN2
PB1/TIM1_CH2N/AIN1
PB0/TIM1_CH1N/AIN0
PC1/TIM1_CH1
PC2/TIM1_CH2
PC3/TIM1_CH3
PC4/TIM1_CH4
PC5/SPI_SCK
PC6/SPI_MOSI
PC7/SPI_MISO
PD0
PD1/SWIM
PD2/TIM2_CH3
PD3/TIM2_CH2/ADC_ETR
PD4/TIM2_CH1/BEEP
PD5/UART1_TX
PD6/UART1_RX
PD7/TIM1_CH4/TLI
PE5/SPI_NSS
PF4
VDD
VCAP
VSS
U4 BK2423
CE
CSN
SCK
MOSI
MISO
IRQ
VSS
CDVDD
VDD
IREF
VDD
RFN
RFP
VDDPA
XTALP
XTALN
U5
6050
CLKIN
NC
AUX-DA
AUX-CL
VLOGIC
AD0
REGOUT
FSYNC
INT
SDA
SCL
CLKOUT
RESV
CPOUT
GND
VDD
CS_G
IR1
IR接收头
红外接收
LED1
LED2
DD2 R_LED
DD3 R_LED
DD4 R_LED
DD5 R_LED
DD6 IR
对打发射
Q1 8050
Q2 8050
Q3 8050
Q4 6206
Q5 5V
Q6 2314
Q7 2314
Q8 2314
Q9 2314
D1 5819
M1
M2
M3
M4
堵转1
堵转2
BAT1
ANT
SWIM
RESET
RXD
TXD
+3V3
B+
3.3V