# G1 Labels Product Specification

imagotag

**1 The G1 label family 4**
1.1 Key Features 4
**2 Barcode Information 5**
2.1 Serial Number 6
**3 Mechanical Characteristics 8**
3.1 Technical characteristics 8
3.2 Mechanical Dimensions 11
**4 Electrical & RF Characteristics 14**
4.1 Power and Current Consumption 14
4.2 Transmission power 14
**5 NFC 15**
5.1 Functioning 15
5.2 Ordering Information 16
**6 Environmental 17**
6.1 Operating Conditions 17
6.2 Cleaning Instructions 17
6.3 Humidity Conditions 17
**7 Storage and warehousing 18**
**8 Battery lifetime 19**
**9 Battery Replacement 20**
9.1 Audience 20
9.2 Instructions 20
9.3 Steps 20
**10 Reliability Test Items 21**
**11 Certifications 22**
11.1 Types 22
11.2 Overview 22
11.3 Applied Standards 22
11.4 Declaration 23
**12 Packing 24**
12.1 G1 1.6 red 24
12.2 G1 2.2 red 24
12.3 G1 2.6 red 24
12.4 G1 2.7 (red) 25
12.5 G1 4.4 (red) 25
12.6 G1 7.4 (red) 25

**13 Intended Use** 26
**14 Improper Use** 27

# 1 The G1 label family

The imago G1 electronic shelf label family offers high-quality display options, operating with a replaceable battery and thus working with any external power supply. The G1 red family is capable of changing all pixels to black, white or red.

The current line-up has display sizes from 1.6 inch to 7.4 inch. They may be used in landscape and portrait mode and can be customized with changeable front covers.

| Caption | Display Resolution | Density (dpi) | Display Colors | Useable Pages | Active Display Area (mm) | Updates per Hour | Battery lifetime: 5 years with X updates per day |
|---|---|---|---|---|---|---|---|
| **G1 1.6 red NFC** | 152 x 152 | 140 | b/w/r | 4 | 27.5 x 27.5 | 7500 | tbd |
| **G1 2.2 red NFC** | 212 x 104 | 111 | b/w/r | 4 | 24 x 48 | 8500 | 2 |
| **G1 2.6 red NFC** | 296 x 152 | 125 | b/w/r | 4 | 60 x 31 | 4000 | 2 |
| **G1 2.7** | 264 × 176 | 117 | b/w | 8 | 38 x 57 | 5000 | 4 |
| **G1 2.7 red NFC** | 264 × 176 | 117 | b/w/r | 4 | 38 x 57 | 4000 | 2 |
| **G1 4.4** | 400 x 300 | 113 | b/w | 4 | 90 x 67 | 3000 | 4 |
| **G1 4.4 red NFC** | 400 x 300 | 113 | b/w/r | 4 | 90 x 67 | 2000 | 2 |
| **G1 7.4** | 800 x 480 | 126 | b/w | 12 | 162 x 97 | 1000 | 4 |
| **G1 7.4 red NFC** | 800 x 480 | 126 | b/w/r | 4 | 162 x 97 | 600 | 2 |

## 1.1 Key Features

- 2.4 GHz bi-directional MSK proprietary radio
- Radio coverage: up to 25 meters
- Return Signal: yes
- 11 available communication channels
- Ultra-low power consumption
- Customer-replaceable battery
- Full graphical e-Ink display with paper-like readability
- Changeable and customizable front covers
- Super wide viewing angle (nearly 180 degrees)
- Flexible mounting options available
- May be used in landscape and portrait mode
- Fast response time (less than 15 seconds)
- Water resistant
- 128-bit AES encryption with secure key exchange
- Multiple pages support with preloading and fast page switching
- Integrated NFC tag as an option

# 2 Barcode Information

The labels come with a label ID (which is a unique identifier – just like a MAC address) and this label ID as a barcode on the display (and printed on the back of the label).

The label ID consists of 8 hexadecimal digits (0-9 / A-F). The first 2 digits identify the different label types, shown on the following table:

| Caption | Label-ID |
|---|---|
| **G1 1.6 red NFC** | F1xxxxxx |
| **G1 2.2 red NFC** | A5xxxxxx |
| **G1 2.6 red NFC** | B6xxxxxx |
| **G1 2.7** | B3xxxxxx |
| **G1 2.7 red NFC** | B5xxxxxx |
| **G1 4.4** | C1xxxxxx |
| **G1 4.4 red NFC** | C4xxxxxx |
| **G1 7.4** | D1xxxxxx |
| **G1 7.4 red NFC** | D3xxxxxx |

## 2.1 Serial Number

Depends on Producer (A)

### 2.1.1 Producer is 01

| Part | Description | Format | Example | Comment | Source |
|---|---|---|---|---|---|
| A | Producer | 2 alpha | 01 | | Specified by imagotag once for each fab |
| B | Product family | 3 alpha | G1B | | Specified by imagotag in the product specification document |
| C | Product version | 3 alpha | 301 | | |
| D | Product revision | 3 alpha | 001 | Incremented on every change of product specification | |
| - | Separator | "-" | - | | Fixed |
| E | Internal | 1 alpha | B | Internal | Calculated during production |
| F | Year | 1 dec | 4 | 4=2014, 5=2015,... | |
| G | Week | 2 dec | 10 | Calendar week in current year (01-53) | |
| H | Weekday | 1 dec | 3 | | |
| I | Internal | 5 dec | 00060 | Continuous Serial Number (Counter) | |

**Format:** `AABBBCCCDDD-EFGGHIIIII`
**Example:** `01G1B301001-B410300060`

### 2.1.2 Producer is not 01

| Part | Description | Format | Example | Comment | Source |
|---|---|---|---|---|---|
| A | Producer | 2 alpha | 02 | | Specified by imagotag once for each fab |
| B | Product family | 3 alpha | R22 | | Specified by imagotag in the product specification document |
| C | Product version | 3 alpha | N01 | N = with NFC | |
| D | Product revision | 3 alpha | 001 | Incremented on every change of product specification | |
| - | Separator | "-" | - | | Fixed |
| E | Year | 1 alpha | E | E=2015, A=2010, B=2011,.. | Calculated during production |
| F | Week | 2 dec | 13 | | |
| G | Internal | 6 dec | 000065 | Continuous Serial Number (Counter) | |

**Format:** `AABBBCCCDDD-EFFGGGGGG`
**Example:** `01G1B302001-E13000065`
**Note:**

- Calendar week date is calculated according to ISO 8601 (see http://en.wikipedia.org/wiki/ISO_week_date)

### 3.2.3 G1 2.6 (red)

Outline (mm): 83.6 x 42.5 x 15.6
Weight: 45 g

### 3.2.4 G1 2.7 (red)

Outline (mm): 86.3 x 49.5 x 16.2
Weight: 50 g

### 3.2.5 G1 4.4 (red)

Outline (mm): 114.9 x 88.9 x 17
Weight: 104 g

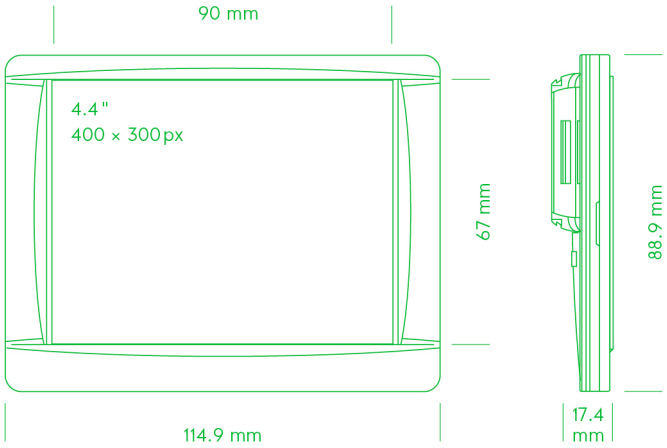


### 3.2.6 G1 7.4 (red)

Outline (mm): 186.9 x 125.9 x 19.3
Weight: 239 g

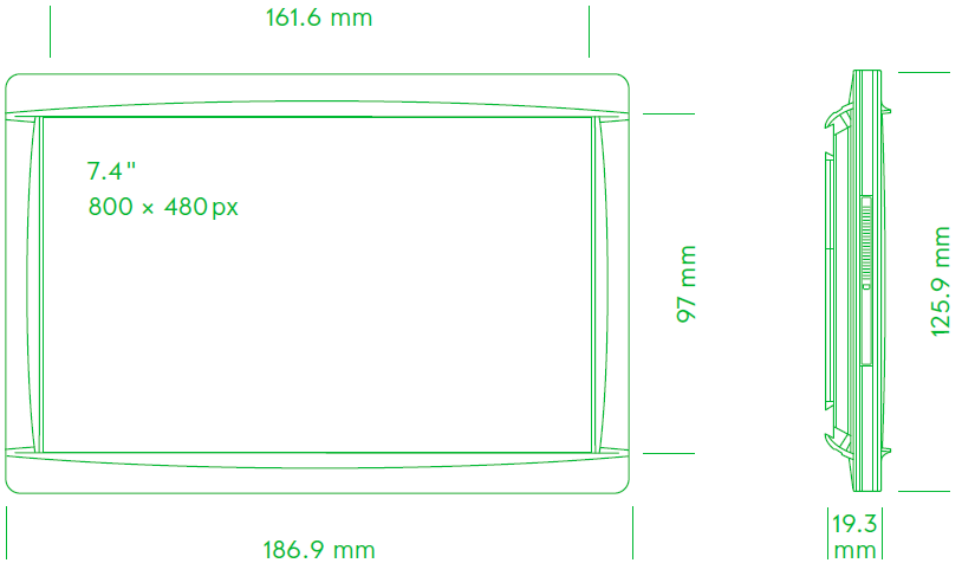

# 4 Electrical & RF Characteristics

## 4.1 Power and Current Consumption

The power supply are 1, 2 or 3 cell-button batteries. The following table will give you a short overview about all kinds of labels and their batteries.

| Caption | Battery Type | Operating Voltage | Nominal capacity | Battery lifetime 5 years with X updates per day |
|---|---|---|---|---|
| **G1 1.6 red NFC** | 1 x CR2450 | 3 V | 550 mAh | tbd |
| **G1 2.2 red NFC** | 2x CR2450 | 3 V | 1100 mAh | 2 |
| **G1 2.6 red NFC** | 2x CR2450 | 3 V | 1100 mAh | 2 |
| **G1 2.7** | 2x CR2450 | 3 V | 1100 mAh | 4 |
| **G1 2.7 red NFC** | 2x CR2450 | 3 V | 1100 mAh | 2 |
| **G1 4.4** | 2x CR2450 | 3 V | 1100 mAh | 4 |
| **G1 4.4 red NFC** | 3x CR2477 | 3 V | 3000 mAh | 2 |
| **G1 7.4** | 3x CR2477 | 3 V | 3000 mAh | 4 |
| **G1 7.4 red NFC** | 3x CR2477 | 3 V | 3000 mAh | 2 |

**Note:** battery lifetime can vary depending on the operating conditions of the ESLs (temperature, radio usage etc...) see *Battery lifetime* on page 19

## 4.2 Transmission power

Each ESL has got a transmission power of ≤ 10 dBm (according to the FCC certification).

# 14 Improper Use

Any use that is not mentioned in Section *Intended Use*, shall be deemed to be improper. Any damage which result from improper use, the operator will assumes liability.

The following usage is not allowed:

- Never dismantle the product because except battery there is no component which could be changed by someone who is not qualified.
- Don't drop it.
- Keep it away from water.
- Strictly avoid direct contact with groceries.
- Don’t use the label with defective parts.
- Don’t use the label with spare parts and accessories which are not examined and approved by the imagotag GmbH.
- Unauthorized changes or modifications to the electronic label and their components without the consent of imagotag GmbH are not allowed.
- Don't heat, recharge or bend battery.
- We take no responsibility for stolen labels without encryption.
- Keep away batteries from children.
- Don't throw defective batteries into the dustbin. Give them to a reprocessing company.
- Don't throw ESL into the dustbin. Give them to a reprocessing company.
- Contact imagotag GmbH for more details about this process.