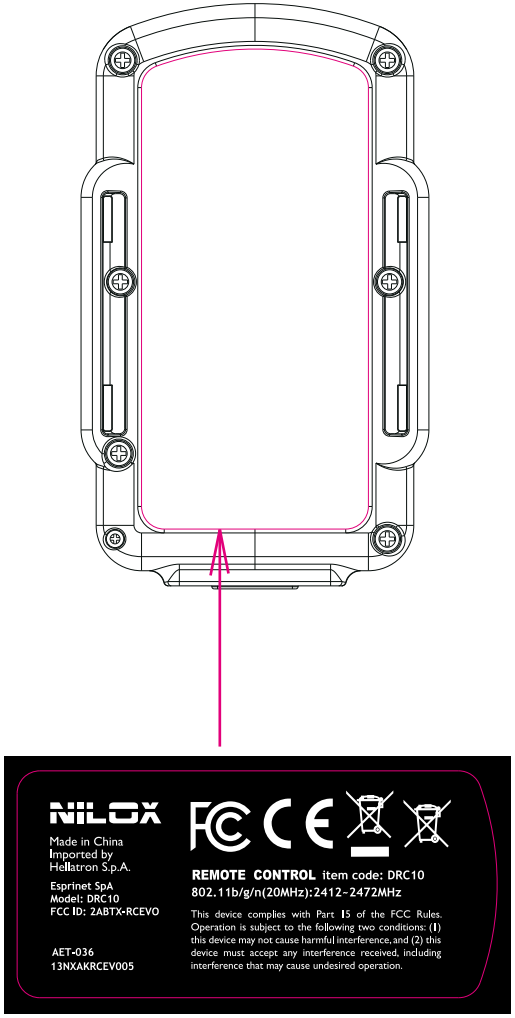EVO **ACCESSORIES** Remote control - back label