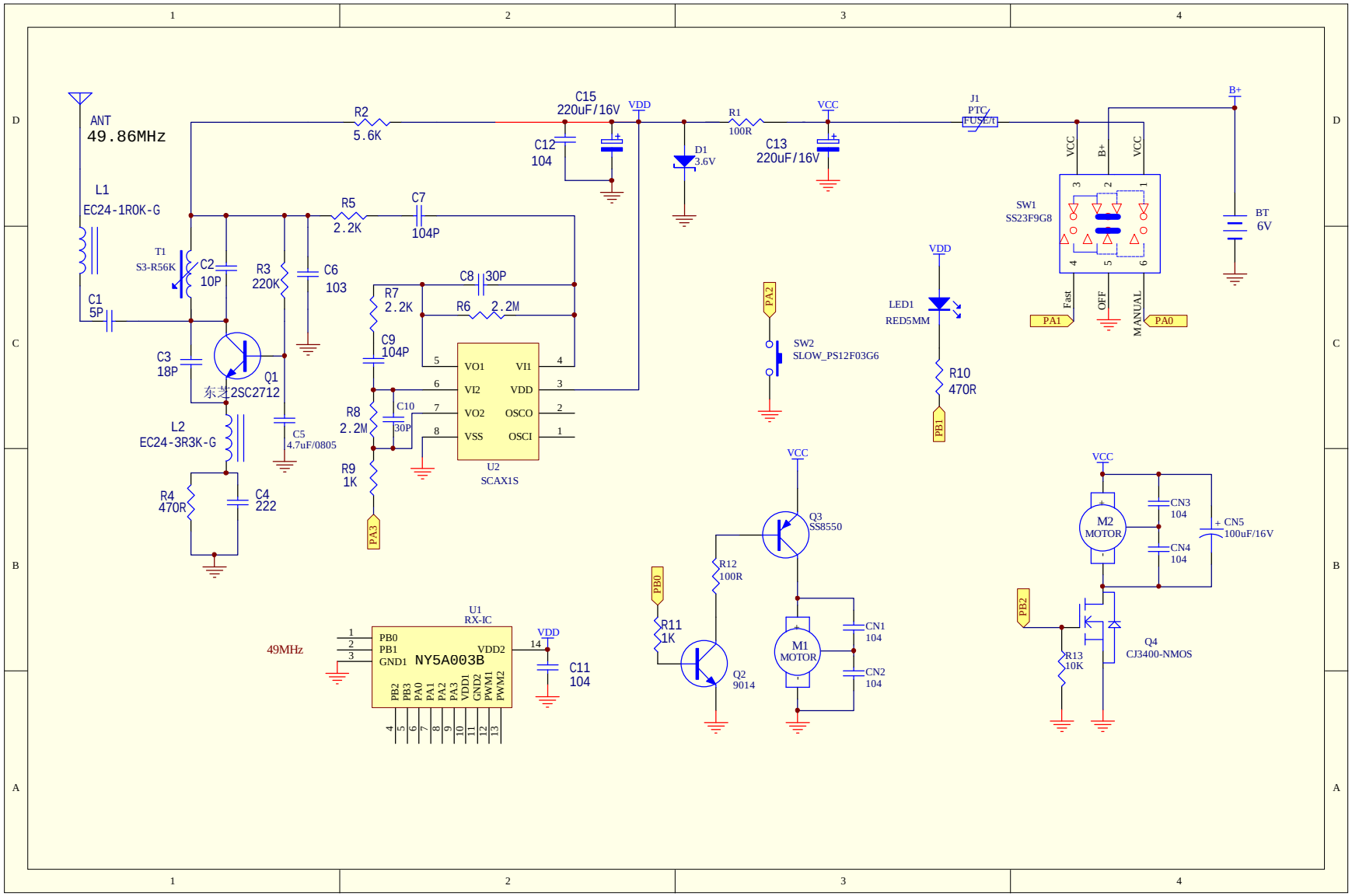
ANT
49.86MHz
L1
EC24-1R0K-G
C1
5P
T1
S3-R56K
C2
10P
C3
18P
Q1
东芝2SC2712
L2
EC24-3R3K-G
R4
470R
C4
222
R3
220K
C5
4.7uF/0805
C6
103
R2
5.6K
R5
2.2K
C7
104P
C8
30P
R6
2.2M
R7
2.2K
C9
104P
R8
2.2M
C10
30P
R9
1K
PA3
U2
SCAX1S
VO1
VI1
VI2
VDD
VO2
OSCO
VSS
OSCI
C15
220uF/16V
VDD
C12
104
D1
3.6V
R1
100R
VCC
C13
220uF/16V
J1
PTC
FUSE/1
B+
BT
6V
SW1
SS23F9G8
Fast
OFF
MANUAL
PA1
PA0
PA2
SW2
SLOW_PS12F03G6
LED1
RED5MM
R10
470R
PB1
U1
RX-IC
49MHz
PB0
PB1
GND1
NY5A003B
VDD2
PB2
PB3
PA0
PA1
PA2
PA3
VDD1
GND2
PWM1
PWM2
C11
104
PB0
R11
1K
R12
100R
Q2
9014
Q3
SS8550
M1
MOTOR
CN1
104
CN2
104
M2
MOTOR
CN3
104
CN4
104
CN5
100uF/16V
PB2
R13
10K
Q4
CJ3400-NMOS