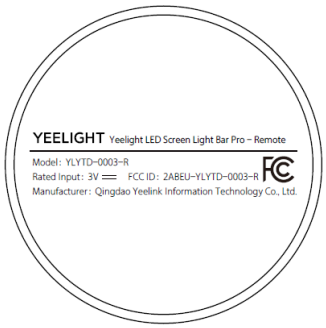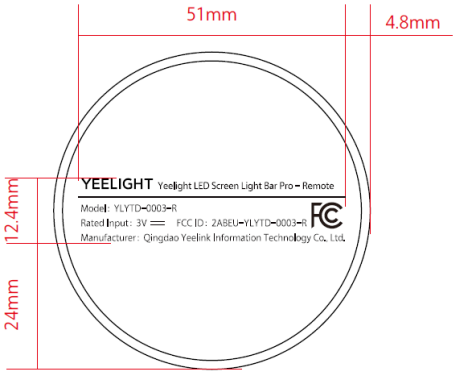Label & Label Location