GRANDWAY

Bottom Cabinet Silk Screen Printing

PART NO. 67-M3600-BCS60B-R | **REV.** 01

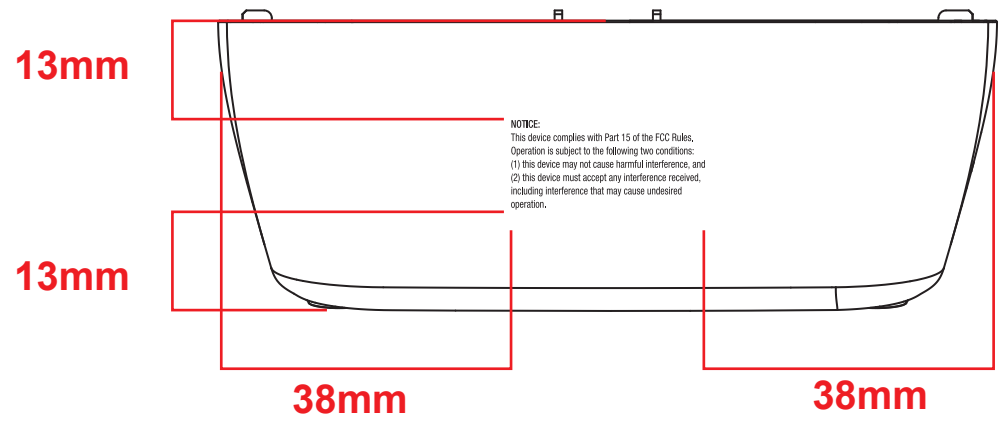

INJECTION:
White RAL 9016

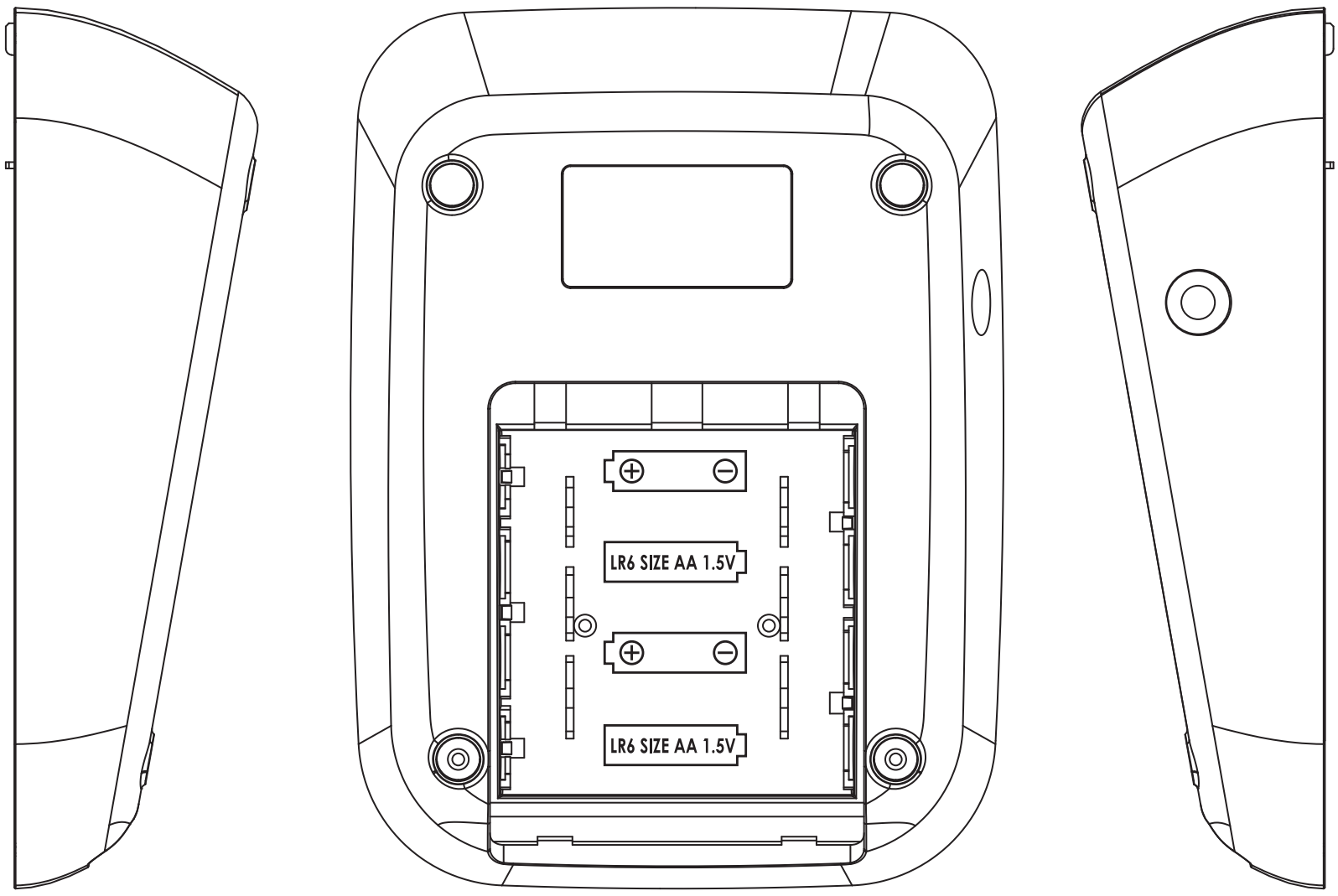

Silk Screen Printing

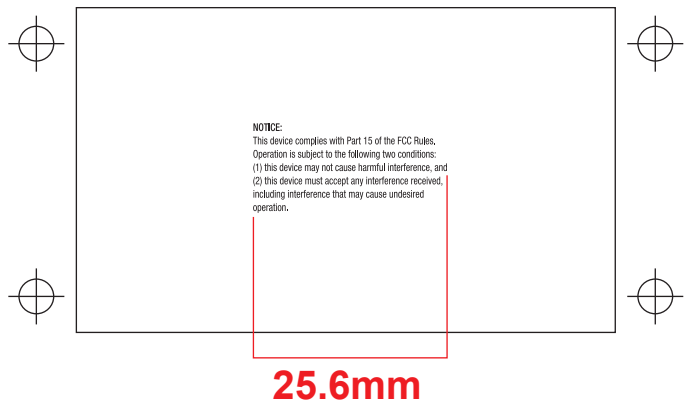

Pantone No. BLACK

PREPARED BY	Mandy	(06-Sept-2021)
REVIEWED BY	Carrie	(06-Sept-2021)
APPROVED BY	Bo	(06-Sept-2021)

REV.	REVISION LISTING	PREPARED BY	REVIEWED BY	APPROVED BY	Eff.DATE
01		Mandy	Carrie	Bonnie	06-Sept-2021