Sindoh
Unmistakable

Sindoh A1^{SD} Series

User Manual

- This user manual contains the product warranty inside.
- Please read this user manual before using this product and keep the manual nearby.

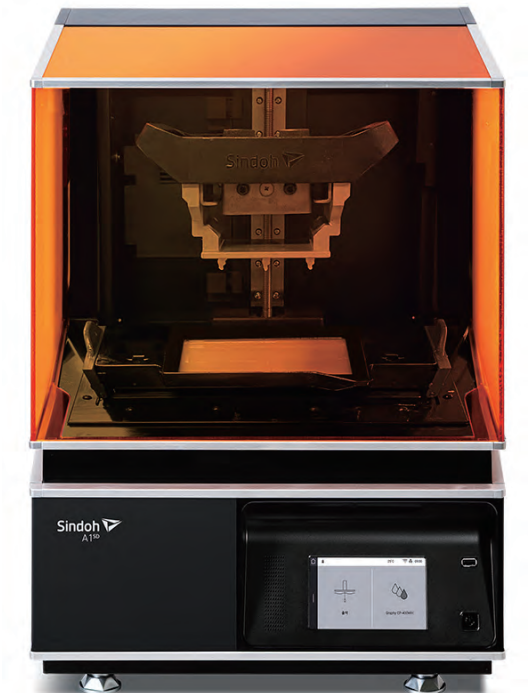

3dprinter.sindoh.com

Safety Instructions

Please make sure to follow the instructions below when using the machine.

⚠ Warning: Failure to observe the instructions may lead to death or serious injury.

- Do not plug the power cord into extensions. Plug the cord directly into the wall socket.
- If the power cable or plug is worn or damaged, pull out the power plug.
- The exposure of the interior of the machine can cause electric shock or burns.
- Exposure to inside the machine can cause electric shocks or burns. To prevent this damage, do not remove any cover or screws other than those specified in this manual.
- Do not place the machine in a highly moist environment as it may cause deformation and malfunction.
- Avoid contact of electrical terminal with metal product such as necklaces, coins, keys, watches, etc.
- Do not hold the interior parts to lift or move the machine.
- Turn off the power and pull out the power plug under the following circumstances;
  - When in contact with liquid
  - When in need for a service or repair request
  - When the device cover is damaged
- For the method of disposal contact local service center or use a proper collection site.
- Please turn off the power when leaving the office after business hours or in circumstances when machine is unoccupied for a long time as it may cause abrupt fire accidents.

⚠ Caution: Failure to observe instructions may cause injuries or damages to property.

- Protect device from humid or wet conditions eg. rain, snow, etc
- Remove power cord from receptacle on the wall before moving device.
- Be careful not to damage power cord while machine is being moved.
- When removing the power cord, please pull the plug and not the power cable.
- Be cautious of clips, staples and any other small metal objects from falling inside the machine.
- Please be cautious on safety when touching the interior of the machine, e.g. cleaning the interior.
- Do not dispose of device or consumables together with household waste.
  For the method of disposal, please contact local service center or use a proper collection site.
- Our product and its components maintain high quality standards and performance. It is recommended to use only the genuine components delivered by authorized distributors if necessary.
- This equipment is not suitable for use in locations where children are likely to be present.

Before using the machine

Thank you for purchasing our product.
This user manual contains detailed information about correct use of machine and easy maintenance to maintain the optimal state, and to contribute to the rationalization of office work of your company
Please carefully read the user manual before using the machine and keep close at hand.
In order to use the machine correctly and safely, please carefully note the precautions before use.

Prohibition and limitation

1. This User Manual has been created for the convenience of the user, actual product may differ from image and explanations shown.
2. The contents of this user manual is subject to change without notice. We are not responsible for the direct and/or indirect loss or damages caused by results of handling or operating the product in any case and for results occurring from user's negligence.
3. The copyrighted literary works can be duplicated and used for personal use or household use and within the same parameter. In other cases than the aforementioned, it is prohibited by law.
4. The above details present only a part of the applicable laws and regulations. Details on these laws/regulations may not be stated as they are. We do not guarantee its correctness and completeness. Please consult a legal advisor to check if the object you intend to print is legal.
5. User is responsible for all loss derived from modification of the product executed by the user or third party.
6. If you use Open Materials or parts and consumables we don't provide, we don't guarantee the printing quality.
7. Font used in the printer GUI and the user manual is the "NANUM" font provided by NAVER.

Contents

Before using the machine

1. Preface ---- *1*
2. Conventions ---- *2*
Symblos ---- *2*
3. Safety Information ---- *3*
4. Precautions ---- *6*
4.1 Installation ---- *6*
4.2 Leveling Machine ---- *7*
4.3 Moving the Machine ---- *8*
5. **Handling Consumables** ---- *9*
5.1 SLA Resin (Photo Curable Resin) ---- *10*
5.2 Isopropyl Alcohol, IPA ---- *11*
6. Instructions for Use ---- *12*
7. Ventilation ---- *14*
8. Notices ---- *15*
9. Disposal of Used Battery ---- *18*
10. Wifi Module Disclaimer ---- *19*
11. USB Flash Drive Disclaimer ---- *21*

Chapter 1. Preparation for Machine Operation

1. Specifications ---- *1-2*
1.1 Printing ---- *1-2*
1.2 Machine ---- *1-2*
1.3 Software/Support ---- *1-2*
2. Components ---- *1-3*
2.1 Basic Components ---- *1-3*
2.2 Finisher Kit ---- *1-4*
3. Understanding the parts ---- *1-5*
4. Installation (Incl. Connection and S/W Installation) ---- *1-7*
4.1 Device Connection ---- *1-7*
4.2 S/W Installation ---- *1-10*

Chapter 2. UI Menu Function

1. UI Menu Function Descriptions ---- *2-2*
1.1 Home ---- *2-3*

1.2 Installed Resin ---- 2-4
1.3 Setting ---- 2-5
XY Scale ---- 2-6
Z Offset ---- 2-9
Chamber Heating ---- 2-11
The First Exposure ---- 2-13
Platform Leveling ---- 2-14
Cloud Monitoring ---- 2-19
Level Printer ---- 2-20
Network ---- 2-24
Test Print ---- 2-28
S/W Update ---- 2-30
General Setting ---- 2-32
LCD Inspection ---- 2-35
1.4 Saved Files ---- 2-36
1.5 Info ---- 2-40
1.6 Quick Guide ---- 2-43
1.7 Programs ---- 2-44
1.8 Cloud ---- 2-46

Chapter 3. Printing

1. Printing ---- 3-2
1.1 Printing from USB Flash Drive ---- 3-2
1.2 Printing via PC ---- 3-8
1.3 Cloud Monitoring ---- 3-8
1.4 Changing Resin ---- 3-12

Chapter 4. Checking Printed Output

1. Checking Printed Output ---- 4-2
1.1 Detaching Printed Output ---- 4-2
1.2 Finishing the Printed Output ---- 4-5
1.3 Preparing the Next Print ---- 4-7
1.4 Enhancing Print Quality ---- 4-8
2. When Printer Can't be Turned ON ---- 4-9
3. If problems Persist ---- 4-10

Chapter 5. Maintenance

1. Machine Cleaning ---- *5-2*
1.1 Printer Interior Cleaning ---- *5-2*
1.2 Periodical Inspection ---- *5-2*
Oil/Grease Inspection ---- *5-2*
1.3 Platform ---- *5-3*
1.4 Resin Tank ---- *5-4*
Resin Tank's Life ---- *5-4*
Checking the Resin Tank ---- *5-4*
Cleaning the Resin Tank ---- *5-6*
1.5 LCD Protective Glass ---- *5-9*
1.6 Orange Cover ---- *5-10*
Opening the Orange Cover ---- *5-10*
Closing the Orange Cover ---- *5-10*
Cleaning the Orange Cover ---- *5-11*
2. Error Messages and Solutions ---- *5-12*
3. Problems and Solutions ---- *5-13*
3.1 Actions in Case of a Printing Failure ---- *5-13*
Removing Failed Print ---- *5-13*
Cleaning the Resin Tank and Platform ---- *5-13*
Resin Tank Release Film Replacement ---- *5-13*
When Reusing Resin, Mix with Unused One ---- *5-13*
3.2 If Noise is Generated from the Lead Screw of Platform ---- *5-14*
4. Replacing consumables and important components ---- *5-15*
4.1 Replacing the Platform ---- *5-15*
4.2 Replacing the Resin Tank ---- *5-17*
Replacing the Resin Tank ---- *5-17*
Replacing the Release Film ---- *5-20*

1. Preface

This user manual describes detailed explanations and points to note in operating the machine. Please read the user manual very carefully before starting use of the machine, and keep it for reference purpose at close.

Important

- The content of the user manual is subject to be changed without any prior notifications.
- Sindoh shall not be liable for consequential, special, indirect damages or losses caused by the handling or operating of the machine or by the user's negligence.
- Copyrighted works can be printed and used for home and/or personal use; other usage is prohibited by law.
- The above details present only a part of the applicable laws and regulations and the details of the law may not stated as they are. Sindoh is not responsible for its correctness and completeness.
  Please consult your legal advisor to check if the object you intend to print is legal.

Note

- The user manual may include a little different descriptions of the machine from the actual one.
  Some options may not be available in some countries. Please contact local distributor for details.
  Some standard units are optional in some countries.
  Please consult your local service center.
- In some countries, some models are not available.
  Please consult your local sales office.
- This manual uses metric units of measurements.
- Font used in the user manual is the "NANUM" font provided by NAVER.

2. Conventions

Symbols

The following symbols are used in this manual and their definitions are as follow.

⚠ Warning

- **Indicates important safety notes.**
  Ignoring these notes could result in serious injury or death.
  Be sure to read these notes carefully for your safe operations of the machine.

⚠ Caution

- **Indicates important safety notes.**
  Ignoring these notes could result in minor injury or damage to the machine or to property.
  Be sure to read these notes carefully for your safe operations of the machine.

Important

- Indicates points to pay attention to when using the machine, and explanations of likely causes of resin misuse, damage to originals, or loss of data.
  Be sure to read these explanations before operating the machine.

Note

- Indicates supplementary explanations of the machine's functions, and instructions on resolving user errors.

Reference

- This symbol comes at the end of the paragraph and indicates where relevant content is located.

[ ]
Indicates the messages or menus that appear on the machine's UI.

【 】
Indicates the names of each function keys on the machine control panel and UI.

3. Safety Information

Please plug the power cord into a properly grounded outlet with is near and quickly accessible from the machine.
Do not use or place the machine in wet or humid environment.
This machine is very sophisticated 3D printing machine, so please keep in mind the following safety information for safe use.

⚠ Caution Prohibition of Arbitrary Modification by Users or 3rd Party

- **Do not modify the machine at user's will in any cases. Warranty will be void if user modifies or changes the machine. Furthermore, user may be exposed to potential dangers.**

⚠ Caution Bodily Harm and Pain Hazard

- **Contact with any machine part which description contains this mark in this manual may cause bodily pain and machine damage.**
- **To avoid personal pain or machine damages, please follow the instructions below.**
  - **Any controls or adjustments or performance of procedures other than those specified herein may result in hazardous radiation exposure.**
  - **Do not open the orange cover during the operation.**
  - **When unplugging the power cord, please turn off the machine using power button first and remove the power cord from the power outlet.**
  - **Unplug and release all cords and cables before moving the machine.**
  - **Use only the genuine power cord enclosed in the product package box or only the spare cords approved by the manufacturer.**
  - **Do not put any portion of your body or objects during machine operation because there are parts moving in high speed in the machine. Small objects such as necklace, hair, and etc may cause personal injuries or damages to the machine.**
  - **Do not twist, bend, step on the power cord, or place heavy things on it.**
    Be careful not to peel off the power cord, or not to overload it.
    Be careful not to get the power cord caught in any objects such as furniture or walls.
    Incorrect use of the power cord may cause fire or electric shock. Check the power cord periodically.
  - **Regarding Issues not described in the user manual, please contact your seller or service center.**
  - **If any problems like malfunctions, body parts caught inside the machine occur, quickly press the pause [Pause] or [Cancel] button on UI screen.**

⚠ Caution Bodily Injury and Pain Hazard

- **Dropping the platform and resin tank may cause body pain.**
- **To avoid personal pain or damages to the device, you need to follow the instructions below.**
  - **Be careful not to drop the platform and resin tank when attaching / detaching from the machine. Because it is made of heavy metal, dropping it may cause the machine damage or bodily injury.**
  - **Use the handle to move the platform and resin tank.**

⚠ Caution Electric Shock

- Contact with this part may result in electric shock.
- To avoid electric shocks, follow the instructions below.
  - Proceed your work after turning off the machine and unplugging the power cord from the outlet in case of accessing the system board, or installing hardware or optional memory devices.
    If some other device is connected with the machine, turn the machine off and separate the cables from the machine.
  - This product has been designed, tested and approved to meet strict safety requirements of international safety standards.
    Some safety features of the parts may not be guaranteed.
    We are not liable for problems caused by unauthorized uses of inauthentic spare parts or consumables.
  - Be sure to turn off the power and unplug the power cord before cleaning inside and outside of the machine to prevent electrical hazards.
  - When checking the machine, unplug the power cord from the outlet first.

⚠ Caution SLA Resin

- Nitrile gloves should be worn in case of handling resin to preventing contact with resin.
- Wearing protective glass is strongly recommended to prevent splashing of resin into eyes.
- Be careful not to let resin accidentally enter inside the body through nose or mouth.

⚠ Caution Internal UV radiation

- Typical Wavelength : 405 nm
- Risk group of internal LED Module : 2 or 3
- This machine is classified as exempt group per IEC 62471 : This means the machine dose not produce hazardous UV Lradiation
  Orange cover cuts off internal UV radiation to protect users from exposure to risk group 2 or 3 UV radiation.
  Be careful not to cause damages such as cracks or breakage to orange cover due to impact.
  If orange cover is cracked or broken, stop using the device immediately and contact a local service center for repair.

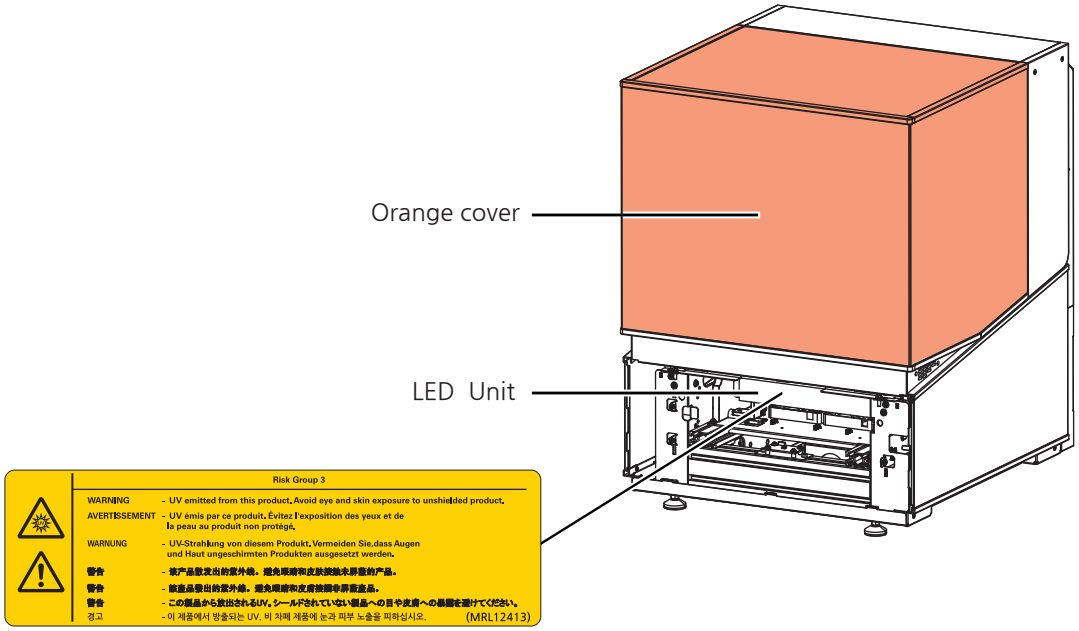

4. Precautions

4.1 Installation

⚠ Caution Injury Hazard

- **Install the machine in a well ventilated area.**
- **You can smell odor during the operation. It should not be harmful, but if the area of the place where the machine is located is not well ventilated, make sure to ventilate the area appropriately periodically.**
- **Place the machine in the place where it can't be touched by children, pets, etc to prevent any accidents.**

Important

- Install the machine with its vents spaced at least 10cm away from walls and other equipments.
- Secure properly sufficient space around the machine for easy ventilation and operation.
- Do not install or use the machine outside.
- Use the machine at temperatures of 20℃~30℃ and relative humidity of 15%~70%.

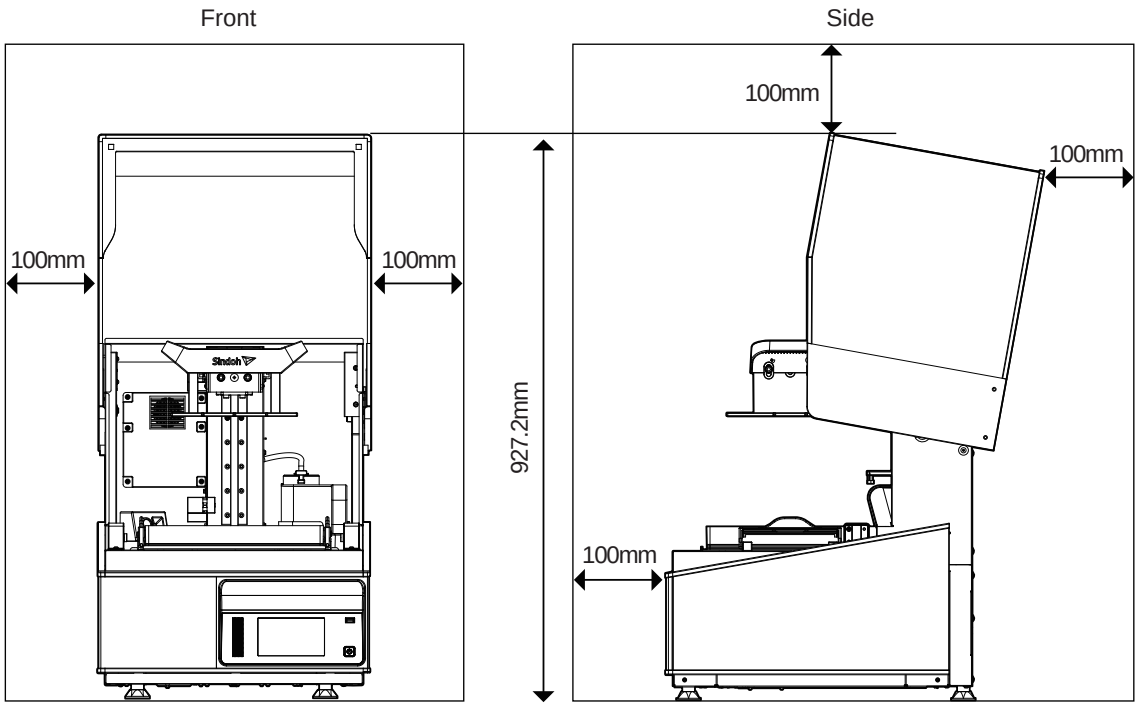

4.2 Leveling Machine

Install the printer on a flat surface.

If the printer is not leveled, irregular noise and vibration may occur, resulting in splash resin or printing failure.

This product has four screws for the purpose of leveling.

The printer can be leveled by turning them according to the indication of the built-in level.

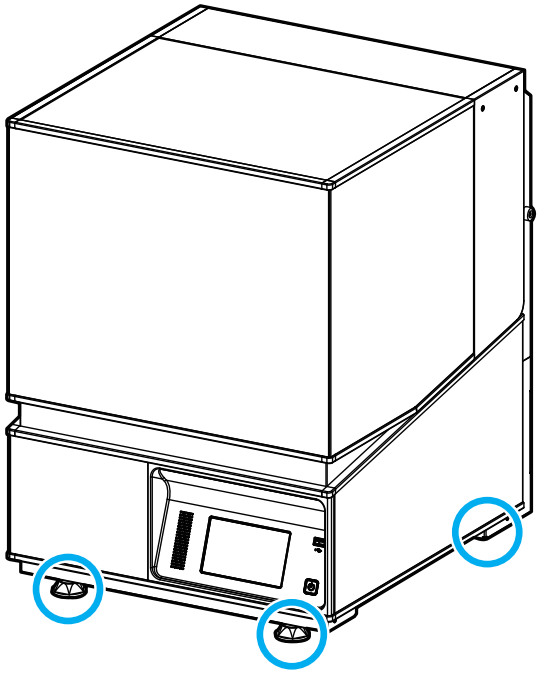

For more details of leveling, refer to “Level Printer of 2. UI Menu Function”.

4.3 Moving the Machine

1. Turn off the power by pressing power button.
2. Unplug the power cord and all cables connected to the machine.
3. Make sure if resin tank is removed. Otherwise, resin in the resin tank may overflow.
4. Lift the machine using handles located in the left/right side of the machine. Two people must work together using their both hands because the machine is very heavy.

⚠ Caution

- **Be sure to unplug the power cord from the outlet and remove all cables before moving the machine.**
  Bend your knees enough to protect your spine when lifting the machine.
  Use lift handles. If you hold the other parts of the machine, it may break them.
- **Repack the machine with the box provided when transporting a long distance is required.**
  Do not tilt or upset the box after repacking because it may cause the damage of the machine or malfunctions.
- **Do not move the machine with the orange cover opened. It may cause injuries due to the movement of cover.**
- **If any resin remains in the resin tank, remove the resin tank before moving the machine.**
- **It is strongly recommended that two or more people work together for safety.**

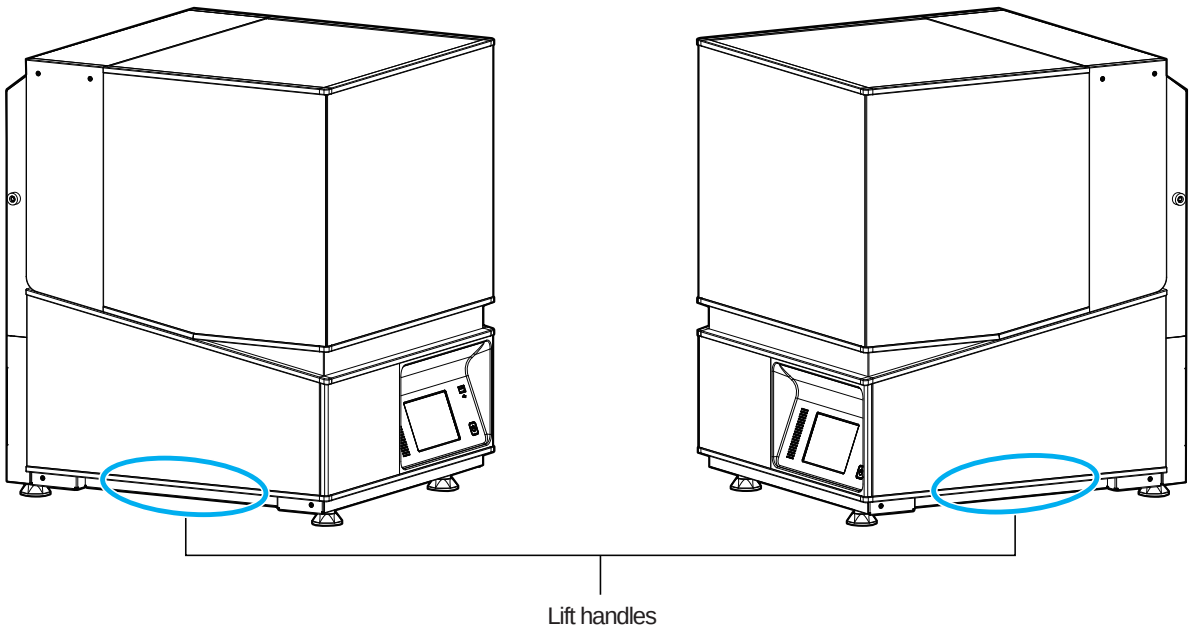

5. Handling Consumables

⚠ Warning

- **Isopropyl alcohol can be flammable, even explosive..**
  Any containers holding isopropyl alcohol should be kept closed or covered when not in use because it is highly volatile. it should be kept away from heat, fire or sparks.

⚠ Caution

- **Keep consumables out of reach of children, pet, etc.**
- **If skin irritation occurs after touching resin, please see a doctor.**

Important

- Do not keep the resin cartridge in the following places.
  - Exposed to fire
  - Exposed to direct sunlight
  - Where temperature and humidity may rise
  - Where dramatic change of temperature may occur
  - Covered with dust
  - Inside a vehicle for a long time

5.1 SLA Resin (Photo Curable Resin)

Please be cautious of the followings when handling Resin.

- Wear nitril gloves all the time while handling the resin.
- Resins being used for this machine should not be used for the food, drink and medical purposes.
- Do not eat or inhale resin in any forms.
  Be careful not to let the resin enter your body through eyes or nose.
- Do not expose the resin to heaters or stoves, direct sunlight, ultraviolet rays, inert gas and oxidizing agents.
- Resin is vulnerable to various lights such as sunlight, fluorescent lamp, LED bulb.
  Do all the works on the resin, such as printing, post-processing, cleaning, etc., in a dark place with no light. If the working place requires some lights, please use a UV protection film on the light to weaken the light intensity.
- Do not use touch screen with hands or any tools contaminated with resin. Touch screen may malfunction if it is covered with resin.
- If storing the remaining resin is necessary, resin must be cleaned remove dirt, plastic debris, etc by filtering. Use dedicated container to store resin and seal the cap firmly.
- If resin is stored in the resin tank, it can be cured or color dye can be separated. Stir the resin with a rubber scrapper or spatula in every 24hours to mix it up well. If resin tank is damaged due to improper resin tank management, manufacture will not take a responsibility.
- Resin in a liquid form is not a general waste and should not be poured into drains. It must be disposed of by a designated waste disposal company.
  If difficult to dispose it by a waste disposal company, please dispose of it after pouring it in a transparent plastic bag and curing it by exposing to sunlight or UV light.
  Cured resins can be disposed with other normal garbage.
- Be careful not to get any resin on the parts other than the resin tank, platform and inside the machine. This may cause malfunction or malfunction of the unit.

Important

- Please note that you shall follow our technical information or support being described in this manual at your own discretion and risk.
- We are not responsible for the use and handling of resin other than those described in this manual.
- Resin specifications can be changed without any notice.

5.2 Isopropyl Alcohol, IPA

Please be cautious on the followings when handling the IPA.

- Please make sure to wear nitril gloves all the time while using the IPA
- Carefully follow the safety instructions provided with the isopropyl alcohol you purchase. You should consult the chemical manufacturer or supplier for more in depth safety information.
- Isopropyl alcohol can be flammable, even explosive, and should be kept away from heat, fire or sparks.
- Any containers holding isopropyl alcohol should be kept closed or covered when not in use because it is highly volatile.
- Need to replace new IPA for the best performance regularly because it can be easily diluted.

⚠ Caution

- **We do not manufacture and sell Isopropyl alcohol. Consult the manufacturer for details of safety information.**
- **When disposing IPA, be sure to follow the instructions specified by the manufacturer or supplier.**

Important

- Do not use Isopropyl alcohol or ammonia-based cleaner to clean orange cover. Acryl(PMMA) material which orange cover is made of can cause chemical reaction with some types of chemicals such as IPA, ammonia-based cleaner, etc, and eventually the cover can be broken or deformed.
- When cleaning Acryl material parts, use only clean microfiber cloth and a dedicated cleaner for acryl (PMMA) material (e.g. NOVUS No.1 Plastic Clean and Shine).
- Non-microfiber cloth or paper towel can cause the scratches on the parts.

Acrylic Dedicated Cleaner

Microfiber Cloth

6. Instructions for Use

⚠ Caution

- **The following items are for user-handling components made of metal, so they are very heavy.**
  - **Resin tank**
  - **Platform**
- **If any of them falls while installing/removing or moving it, the machine may be damaged, or if it falls on a person, it may cause an injury.**

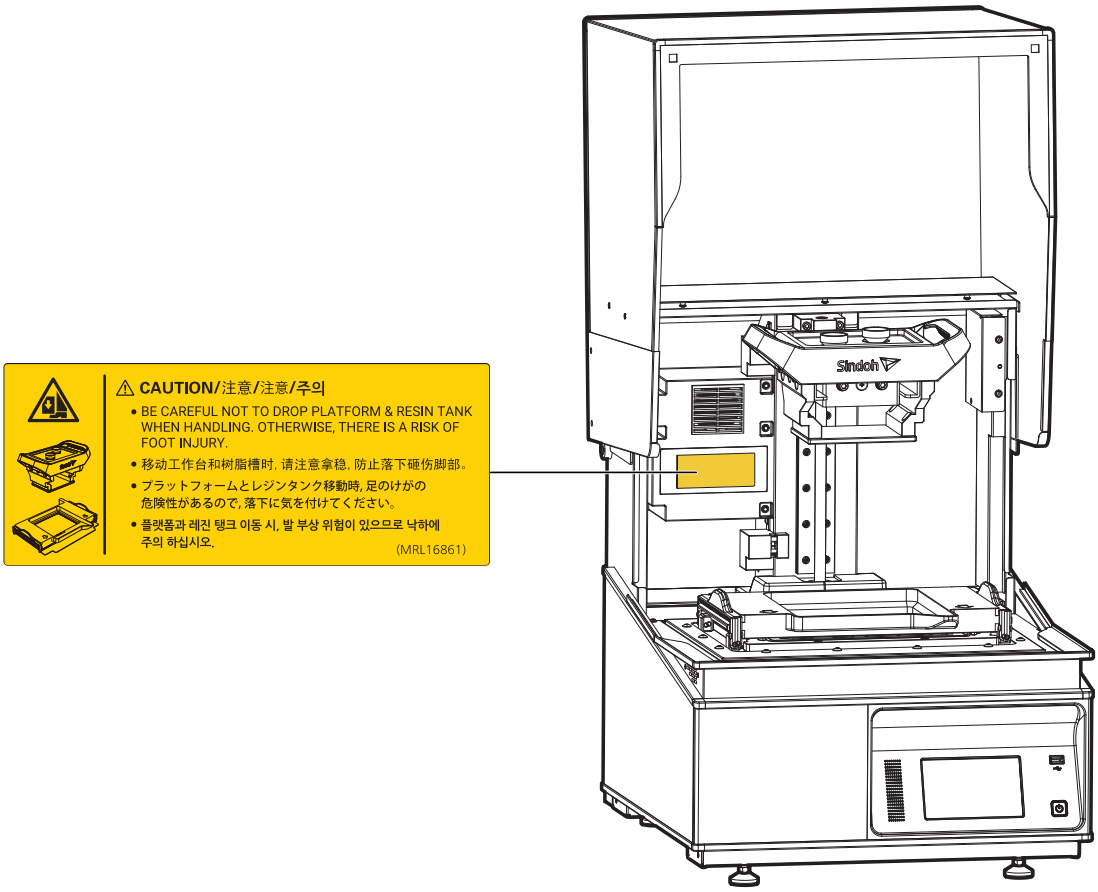

⚠ Caution

- **Do not operate the machine in a manner not specified in the instructions.**
- **Do not remove any caution label or marking.**
  If a caution label or marking is dirty, make sure to clean it for readability.
  If it is damaged or cannot be made readable, please request a service.

Important

- If any of the following optical components positioned in the path of a LED beam reaching the resin is damaged or dirty, it may cause reduced quality or failed printing, so make sure to clean it while preparing the next one after completing the previous printing.
  - Release film of the resin tank.
  - LCD Protective glass.
- For details on how to clean the resin tank, refer to “Resin Tank of 5. Maintenance”.
- For details on how to clean the LCD Protective glass, refer to “LCD Protective Glass of 5. Maintenance”.

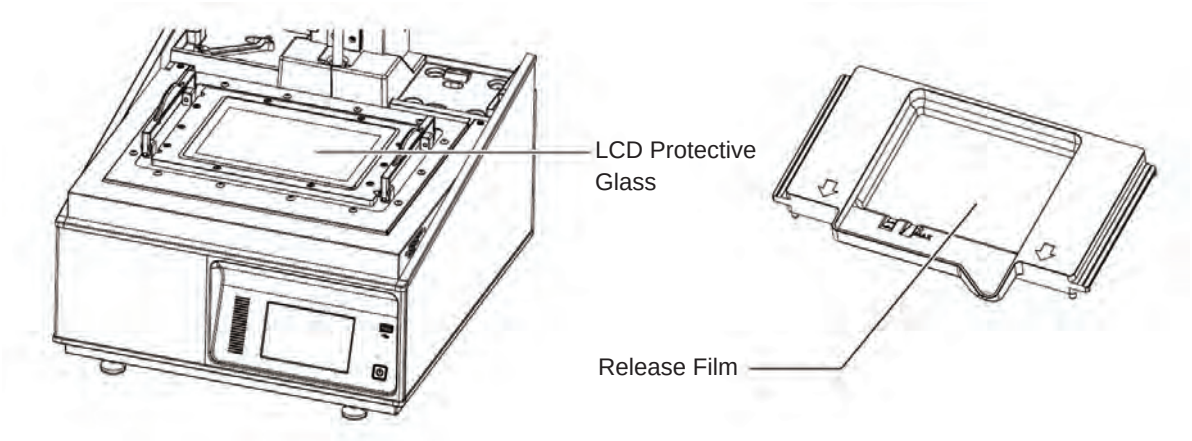

Important

- Do not open the orange cover during machine operation.
  It is designed to stop temporarily for the safety of the user; if the cover is opened during an operation, it may cause reduced quality or failed printing.

7. Ventilation

⚠ Caution

- **Use the machine in a place with good ventilation.**
  Do not block vents. Inappropriate cooling may lead to high temperatures inside the machine.
- **In general, a new machine may produce small amount of gaseous components, so ensure good ventilation when the machine is used for the first time. If the machine is in operation for an extended time, do not stay in the same room for a long time.**
- **Basically, it is recommended to expand the supply and exhaust facilities or install a ventilation device such as a fan at the 3D printer installation site .**
- **It is recommended to use indoor ventilation as follows.**

Indoor ventilation (ventilation device)	1. Considering the indoor space area, use an indoor ventilation fan with an appropriate capacity 2. Ventilation fans are operated before the 3D printer is operated, and at least 1 hour after the 3D printer is completed. 3. Do not completely seal the door while the fan is running, but keep the door slightly open. 4. Use of a ventilator is carried out with natural ventilation.
Indoor ventilation (natural ventilation)	1. In spring and autumn, open windows (5~20cm) considering the outside air. 2. In summer and winter, windows and doors are opened for 5 minutes immediately after the 3D printer is operated, and ventilation is required for 5 minutes or more every hour. 3. After the 3D printer is finished, open the printer door and ventilate for at least 30 minutes ►Natural ventilation is performed considering whether polluted external air is flowing in depending on the surrounding environment and atmospheric conditions.

- **3D printer during operation are recommended for industrial dust masks to wear**

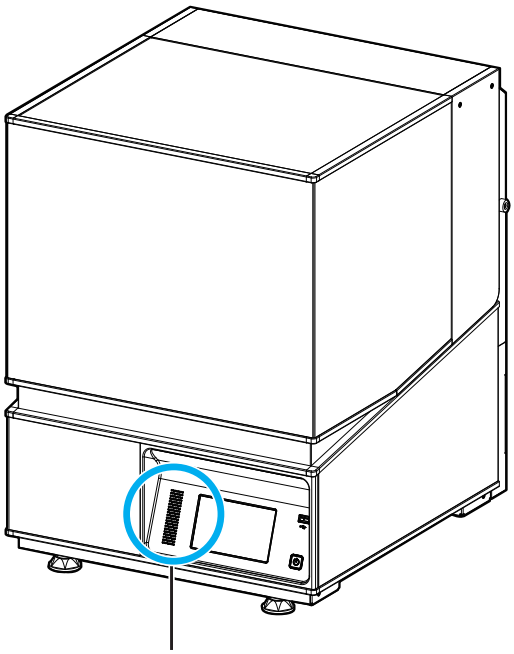

Intake

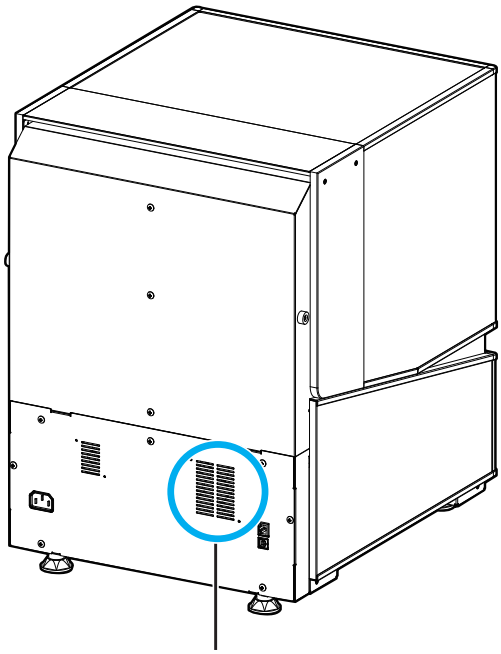

Outtake

8. Notices

❖ Noise Emission Level

The following noise level is measured in accordance of ISO 7779 and reported to meet ISO 9296.
Some modes may not be available in products you purchased.

	Average Sound Pressure at 1 Meter Away (dBA)
Printing	45dBA
Standby	Under 40dBA

❖ Temperature/Humidity

- **Machine**

Operation	20℃~30℃ , 15%RH~70%RH
Shipping	-20℃~40℃, 15%RH~95%RH (for 0℃ or lower, temperature should be higher than the outdoor's, must not touch the floor)
Storage	-20℃~40℃, Below 80%RH (No condensation, must not touch the floor)

❖ Disposal of the Products

Do not dispose the machine and consumables together with household wastes.
For disposal or recycling, contact your local sales office.

❖ EMI(Electromagnetic Interference) Notice

This machine complies with the limits for Class A.
Class (Industrial Device) : This is a class A Product. In a domestic environment this product may cause radio interference in which case the user may be required to take adequate measures.

① **FCC COMPLIANCE STATEMENT**

This device complies with part 15 of the FCC Rules. Operation is subject to the following two conditions : (1) This device may not cause harmful interference, and (2) this device must accept any interference received, including interference that may cause undesired operation.

② **INFORMATION TO USER**

This equipment has been tested and found to comply with the limits for a Class A digital device, pursuant to part 15 of the FCC Rules. These limits are designed to provide reasonable protection against harmful interference in a residential installation.
This equipment generates uses and can radiate radio frequency energy and, if not installed and used in accordance with the instructions, may cause harmful interference to radio communications. However, there is no guarantee that interference will not occur in a particular installation. If this equipment does cause harmful interference to radio or television reception, which can be determined by turning the equipment off and on, the user is encouraged to try to correct the interference by one m ore of the following measures :

- Reorient or relocate the receiving antenna.
- Increase the separation between the equipment and receiver.
- Connect the equipment into an outlet on a circuit different from that to which the receiver is connected.
- Consult the dealer or an experienced radio/TV technician for help.

③ **CAUTION**

Any changes or modifications not expressly approved by the manufacturer responsible for compliance could void the user's authority to operate the equipment.

④ **This product has the certification issued under the authority of the FCC by one of Certification Body.**

FCC ID : 2AB83-A1SD

⑤ **IC Compliance**

This Class [A] digital apparatus complies with Canadian ICES-003.

Cet appareil num rique de la classe [A] est conforme la norme NMB-003 du Canada.

❖ Wireless LAN Specifications

This wireless machine may be affected by electromagnetic interference so it should not be used for life saving services.

This notice applies only to models with a Wifi module.

❖ WLAN Notice

Exposure to radio frequency radiation:

The following notice is applicable if your printer has a wireless network card installed.

The radiated output power of this device is far below the FCC radio frequency exposure limits.

A minimum clearance of 20 cm (8 inches) must be maintained between the antenna and any persons for this device to satisfy the RF exposure requirements of the FCC.

❖ Power Consumption

Here is the table showing the power consumption of the product.

Mode	Description	Power Consumption (W)
Printing	The machine is printing using electronic input data.	500W
Standby	The machine is in standby mode.	60W (Heater OFF) 160W ((Heater ON)
Power Off	The power plug is plugged into the outlet but the machine is power off.	Lower than 0.5W

The above power consumption is the hourly average value.

Instant power consumption can be much higher than the average value.

Note

- You can set the time for machine to become power saving mode automatically.
  For more information, please refer to 'Energy Saving' in '2. UI Menu Function'.

❖ Deactivated Mode

The machine consumes power even in the deactivated mode. Unplug the power cord to completely stop the power consumption.

❖ Total Energy Usage

It would be useful to calculate the Total energy usage of the machine.

Since the electricity bill is charged in Watt unit, you have to multiply time spent in each mode by power consumption in order to calculate the energy use.

Total energy usage is the sum of energy used in each mode.

❖ Condensation

Dramatic change of the ambient temperature may produce water droplets on the interior and exterior of the machine. Wipe the water droplets on the outer surface, but for the inside please let them dry off by leaving front door and cover opened.

Note

- Do not remove caution labels or notations.
  If you can't make them legible, or if caution label or notation is damaged, please contact your service representative.

9. Disposal of Used Battery

Control board uses a Lithium battery.
Please discard used batteries following the environmentally friendly procedure stated on the manufacturer guidelines.
To replace batteries, please contact a qualified service engineer.

10. Wifi Module Disclaimer

❖ **This machine includes a WIFI module compatible only with Sindoh's 3D Printer models. Whether the WIFI module is equipped or not can be differed by models.**

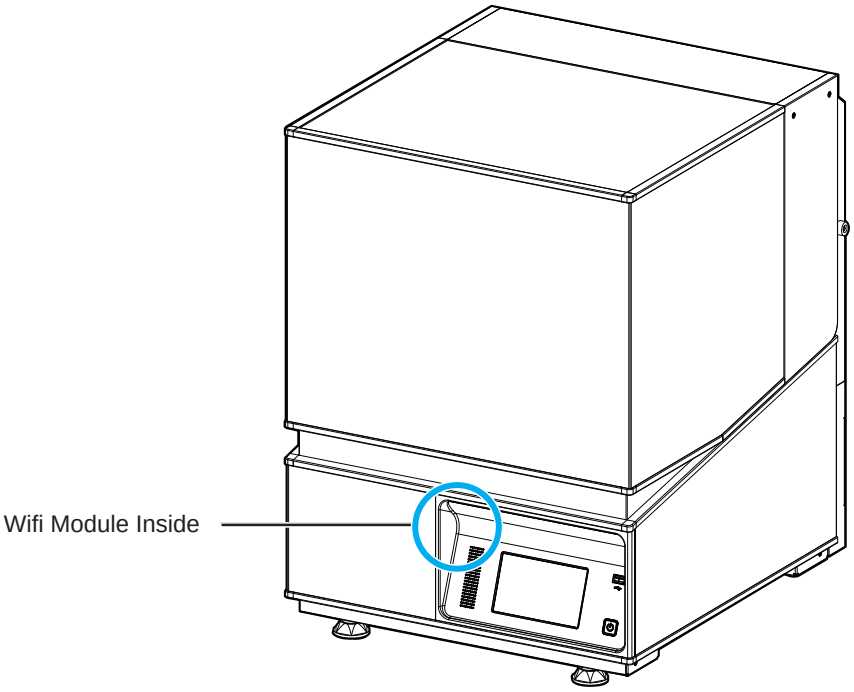

Important

- This Wifi module can cause radio interference, therefore it should not be used for any purposes related to human lives.
- Do not expose this product to water, humidity or liquid.
- Do not expose this product to direct light, hot temperature or fire.

⚠ Caution

- **If the machine has been modified by unauthorized personnel, Sindoh is not liable for the machine trouble or failure.**

⚠ Caution

- **To prevent RF signals that exceed FCC RF exposure limits from being exposed to human, this module has been mounted in a place that minimizes human access.**

Important

Frequency	IEEE 802.11b : 2400 ~2483.5 MHz IEEE 802.11g : 2400 ~2483.5 MHz IEEE 802.11n(20MHz) : 2400 ~2483.5 MHz IEEE 802.11n(40MHz) : 2400 ~2483.5 MHz
Antenna Power Density	IEEE 802.11b : 16 dBm IEEE 802.11g : 15 dBm IEEE 802.11n(20MHz) : 14 dBm IEEE 802.11n(40MHz) : 14 dBm
No. of Channels	IEEE 802.11b : 14 IEEE 802.11g : 14 IEEE 802.11n(20MHz) : 14 IEEE 802.11n(40MHz) : 10
Modulation	IEEE 802.11b : DQPSK, DBPSK, CCK IEEE 802.11g : OFDM/64-QAM, 16-QAM, QPSK, BPSK IEEE 802.11n(20MHz) : OFDM/64-QAM, 16-QAM, QPSK, BPSK IEEE 802.11n(40MHz) : OFDM/64-QAM, 16-QAM, QPSK, BPSK
Power Consumption	5V, 260mA
Dimension	48 X 28 X 10(mm)
Operation Temperature	-20 ~ 70 ℃
Storage Temperature	-30 ~ 80 ℃

11. USB Flash Drive Disclaimer

❖ This USB flash drive is compatible with Sindoh's 3D printer products.

❖ FCC COMPLIANCE STATEMENT

This device complies with part 15 of the FCC Rules. Operation is subject to the following two conditions : (1) This device may not cause harmful interference, and (2) this device must accept any interference received, including interference that may cause undesired operation.

❖ INFORMATION TO USER

This equipment has been tested and found to comply with the limits for a Class A digital device, pursuant to part 15 of the FCC Rules. These limits are designed to provide reasonable protection against harmful interference in a residential installation.
This equipment generates uses and can radiate radio frequency energy and, if not installed and used in accordance with the instructions, may cause harmful interference to radio communications. However, there is no guarantee that interference will not occur in a particular installation. If this equipment does cause harmful interference to radio or television reception, which can be determined by turning the equipment off and on, the user is encouraged to try to correct the interference by one m ore of the following measures :

- Reorient or relocate the receiving antenna.
- Increase the separation between the equipment and receiver.
- Connect the equipment into an outlet on a circuit different from that to which the receiver is connected.
- Consult the dealer or an experienced radio/TV technician for help.

❖ CAUTION

Any changes or modifications not expressly approved by the manufacturer responsible for compliance could void the user's authority to operate the equipment.

❖ Specification of compatible USB flash drive for A1 Series

- Please use the enclosed USB flash drive.
- The enclosed USB flash drive is in FAT32 format.
  The A1 Series 3D printer does not support USB flash drives in NTFS format.
- The warranty will not be valid if a 3rd party USB drive is used.

❖ IC Identification on Class of ITE

CAN ICES-3 (B)/NMB-3 (B)

DECLATION OF CONFORMITY

Product name : USB Flash Drive
Model name : 8GB-WJ004, 4GB-WJ004
FCC Rules : Tested to comply with FCC Part 15, Class B
Operating Environment : For HOME OR OFFICE USE

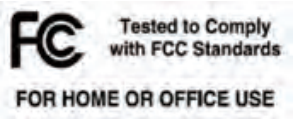

FCC COMPLIANCE STATEMENT

This device complies with part 15 of the FCC Rules. Operation is subject to the following two conditions : (1) this device may not cause interference, and (2) this device must accept any interference received, including interference that may cause undesired operation.

RESPONSIBLE PARTY

Name : Sindoh America, Ltd.
Address : 6047 Tyvola Glen Circle, Suite #115, Charlotte, NC 28217
Phone No. : 1-704-414-6690

We hereby declare that the above specified equipment with the trade name and model number was tested conforming to the applicable FCC Rules under the most accurate measurement standards possible, and that all the necessary steps have been taken and in force to assure that production units of the same equipment with the Commission's requirements.
Manufacturer : Sindoh Co., Ltd.
Address : 3, Seongsuiro24(isipsa)-gil, Seongdong-gu, Seoul, 04797 REPUBLIC OF KOREA

Sindoh A1^{SD} Series
USER MANUAL

Preparation for Machine Operation

1

1. Specifications

1.1 Printing

Printing Method	SLA (Stereo Lithography Apparatus)
Max. Print Size (mm)	W(max):110, D(max):80, H(max):180
Layer Thickness Setting	25㎛~100㎛
X-Y Resolution	50㎛
LED Wavelength	405nm
LED Power	150W
Resin※	Dental Model, Open Materials
Temperature Management	Fan Heater Type
Bed Leveling	Manual

※ We are exploring and developing a variety of resins in order to meet user needs.
For the latest resin types we're supporting, please visit our website.
Quality is not guaranteed when using 3rd Party Resin (Open Materials).

1.2 Machine

Power	500W
Dimensions (mm)	449 x 501 x 600 (W x D x H)
Weight	43.2Kg
Ports	USB Device, USB Host, Ethernet, Wifi※

※ May not be supported depending on model.

1.3 Software/Support

Software Support	Sindoh A Desktop Slicer, Exocad(sold separately), NetFabb(sold separately)
File Format	*.stl, *.ply, *.obj
Operating System	Windows 10(64bit) or Above
Memory (Recommended)	Sindoh A Desktop Slicer – At least 8GB (16GB is recommended) Exocad, NetFabb – At least 16GB (64GB is recommended)

Note

- Graphic card must support OpenGL 4.0 or higher.

2. Components

2.1 Basic Components

Please check all basic components in the packaging box.

⚠ Caution

- **Please keep the box and packaging material; they are needed for product exchange or repair service.**

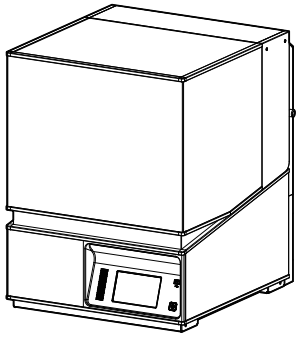

3D Printer

Power Cord

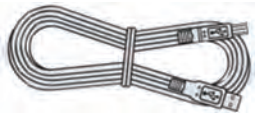

USB Cable

USB Memory

Quick Installation Guide

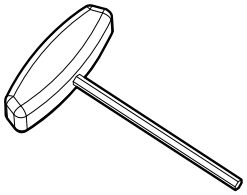

T-Handle Hexagon Wrench (M5)

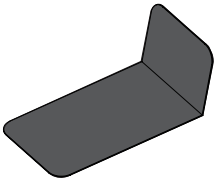

Platform Leveling Gap Guide

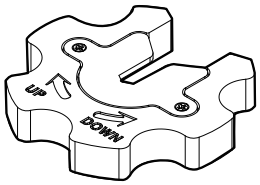

Spanner

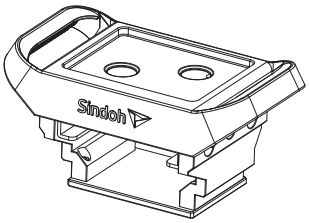

Platform

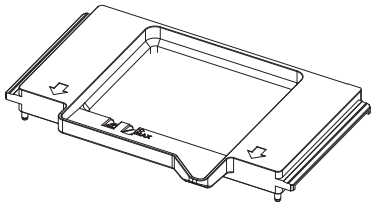

Resin Tank

🔎 Reference

- The types of enclosed components may differ by the model.
- It can be used to remove the printing object from the gap gauge resin tank for platform leveling.

2.2 Finisher Kit

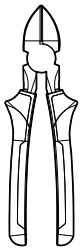

Nipper

Sprayer

Nitril Gloves (2pairs)

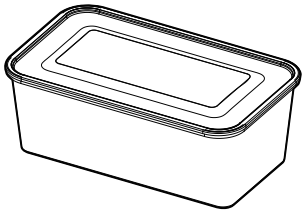

Washing Tub

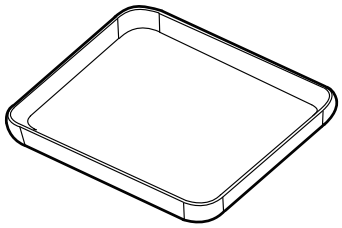

Cleaning Tray

Filters (3pcs)

Metal Scrapper

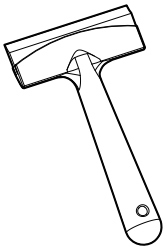

Rubber Scrapper

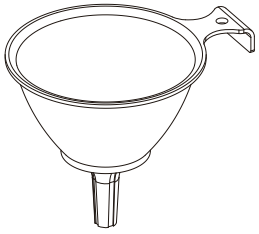

Funnel

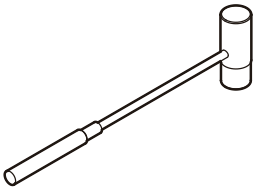

Hammer

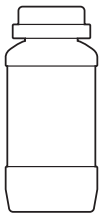

Empty Bottle

Platform Cleaning Brush

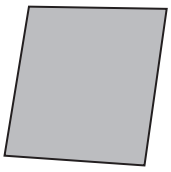

Kit List

⚠ Warning

- **The blade side of metal scraper is very sharp. Please do not use it for other than removing the sculpture. In particular, do not touch or contact the blade side.**
- **Keep rubber scraper clean after use. In particular, clean the resin on the rubber surface.**

Reference

- When purchasing additional filters, pay attention to its mesh filter size.
  If the mesh is too big, the resin remnants may not be properly filtered, and if the mesh is too small, the viscosity of the resin can make the operation inconvenient.
  Our recommended mesh size is 100 ~ 150(number of mesh in 1 inch).
- The types of components may vary depending on the model.

3. Understanding the parts

[Front]

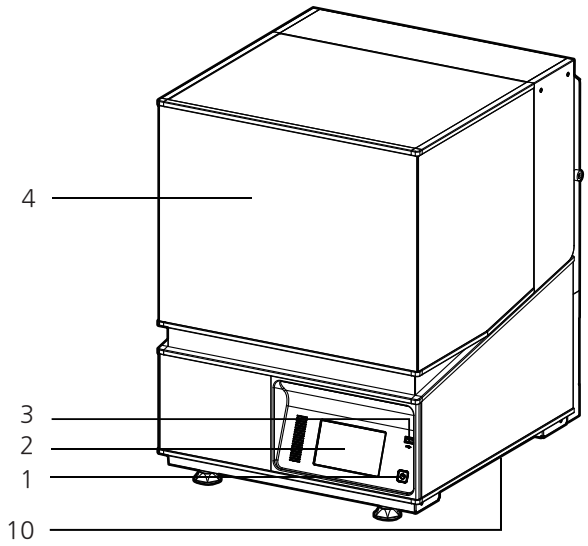

[Rear]

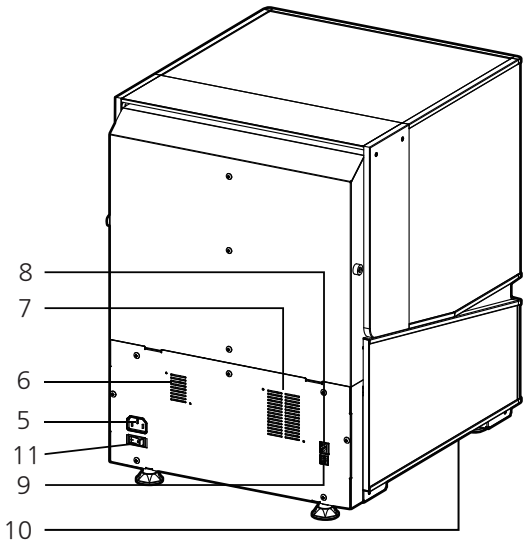

No.	Part Name	Description	
1	**Power Button** ⏻	Press this button shortly to turn on printer. Press and hold for more than 2 seconds to turn off the printer.	
	Power Button Indicator	Lamp ON	Power is ON
		1 second interval flickering	Can be turned on instantly (power cable is connected) ⚠ Caution **– In case of not using the printer for long time, please unplug the power cord.** **– The lamp may flicker for a few seconds after power cord is disconnected.**
		Lamp OFF	Inactive Mode (power cord is unplugged)
2	**LCD Control Panel**	Screen used to control printer. ⚠ Caution **– Usage of printer is recommended after removing the protection film on LCD control panel.** **If the film is not removed, the touch screen may not work properly.**	
3	**USB Slot**	Connect USB flash drive containing printing information and print directly from USB flash drive.	
4	**Orange Cover**	Access to the operating area	
5	**Power Port**	Power cord connector	
6	**Speaker**※	Play warning sound.	
7	**Ventilator Fan**	Discharges heat from interior	
8	**LAN Port**	Allows a device to connect to a network using a LAN cable.	
9	**USB Port**	Used to connect printer to computer with a USB cable.	
10	**Carrying Handles**	Handles to use when moving the printer	
11	**Power Switch**	Turns the power on or off.	

※ May not be supported depending on model.

[Interior]

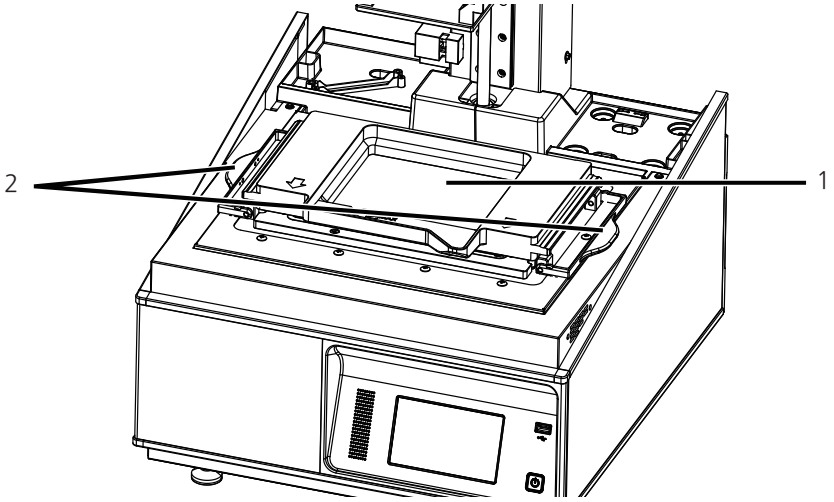

No.	Part Name	Description
1	**Resin Tank**	Working space where resin is filled and printing is processed.
2	**Resin Tank Locking Levers**	Levers that lock and unlock the resin tank.

※ May not be supported depending on model.

[Platform]

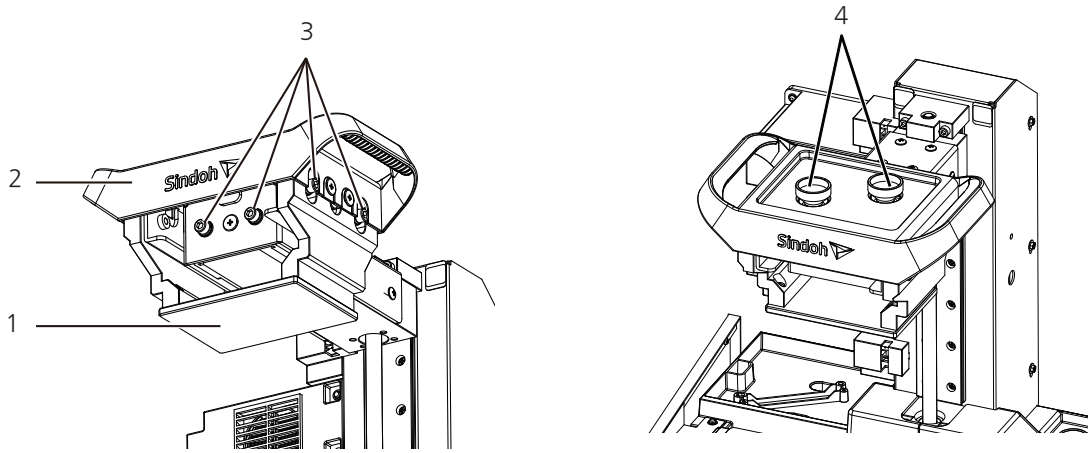

No.	Part Name	Description
1	**Platform**	Workbench to which resin is cured by LED and print is attached.
2	**Platform Handles**	Let users to hold when handling platform.
3	**Platform Locking Screws**	Fix platform after adjusting level of platform and resin tank.
4	**Platform Locking Knobs**	Fix platform after mounting.

4. Installation (Incl. Connection and S/W Installation)

⚠ Caution

- **Please remove all packaging materials from inside and outside of the device. Furthermore, open the orange cover and remove all protective materials and accessories from interior.**

4.1 Device Connection

1 Connect the power cable to the power socket on the rear side of the device, and connect the power cable to the power outlet.

2 Turn on the power switch on the back of the machine.

3 Press the power button, located on the lower right of the device.

4 Please set the language to be used according to instructions shown on UI.

5 Adjust the level of the device with enclosed spinner according to instructions shown on UI. (Refer to “Level Printer of 2. UI Menu Function”)

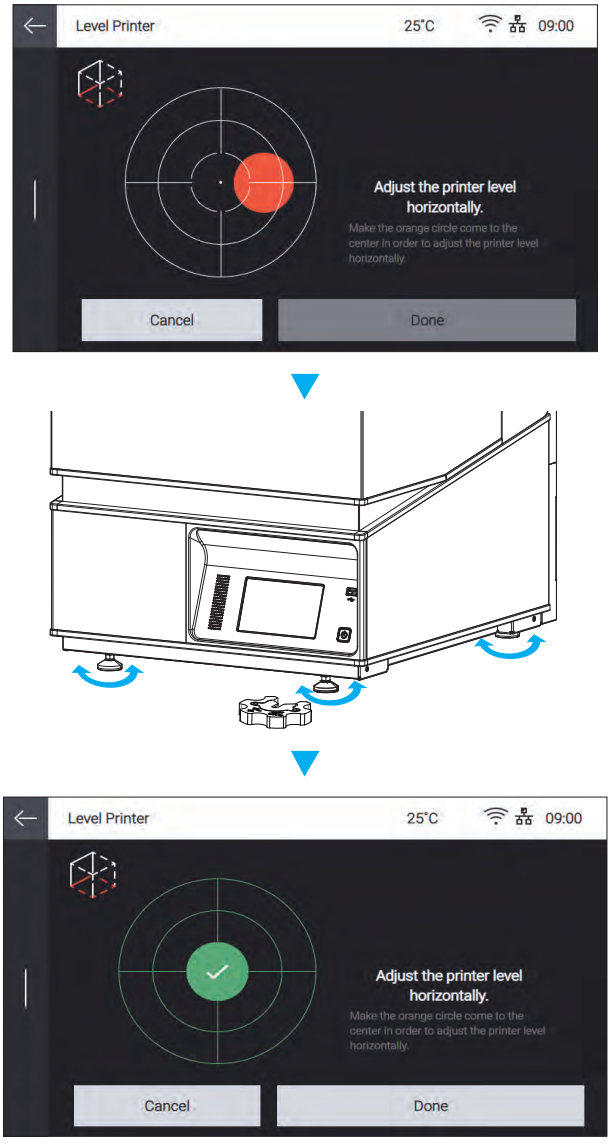

6 Please set the time zone of the machine according to instructions shown on UI.

7 Set time and date of the machine according to instructions shown on UI.

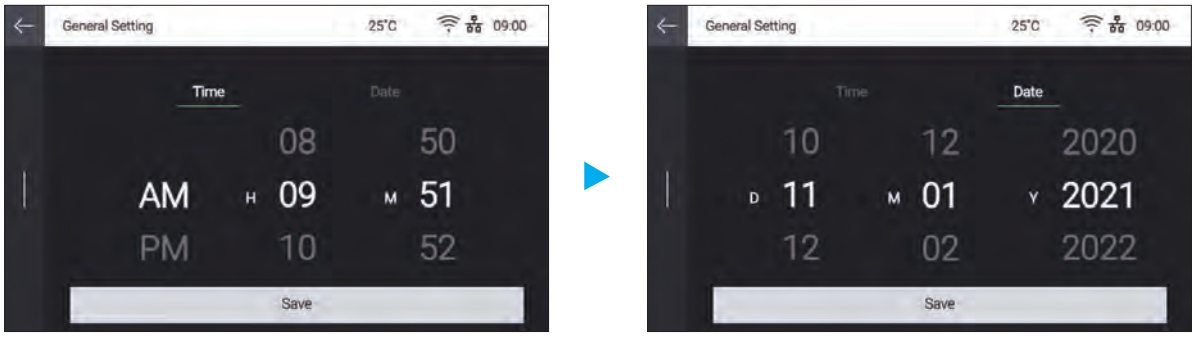

8 After booting up is completed, check if home screen is displayed on UI.

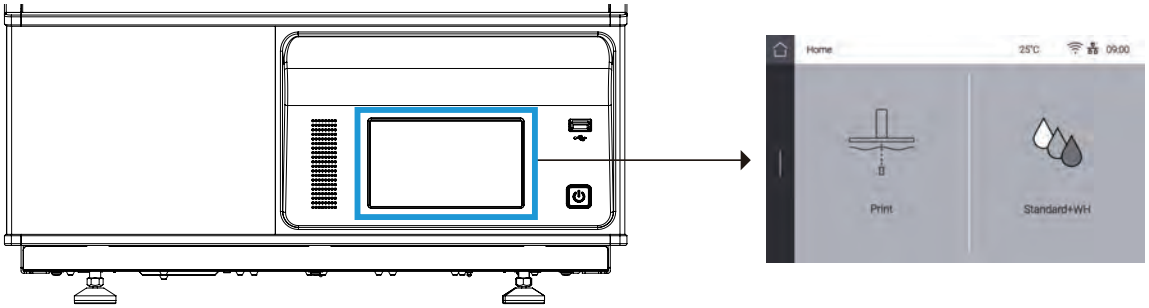

9 Open orange cover and install resin tank and platform.
Install resin tank into the device as shown in the images below.

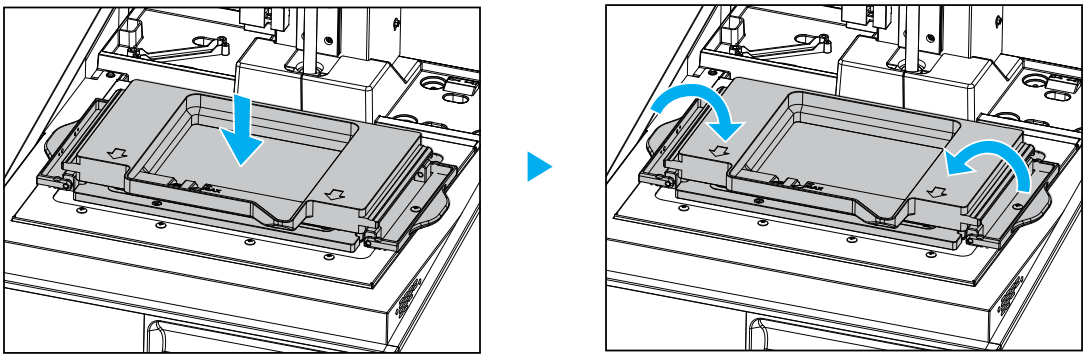

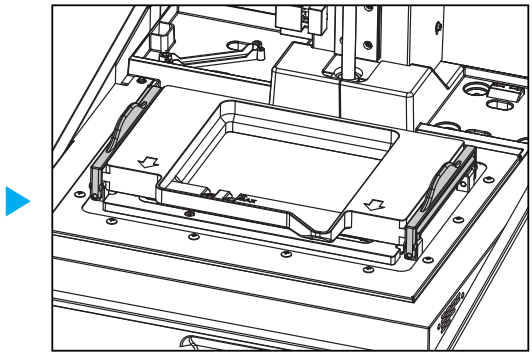

Release two platform locking knobs from machine, attach the platform as shown below, tighten the locking knobs firmly, and attach the platform cover to the platform.

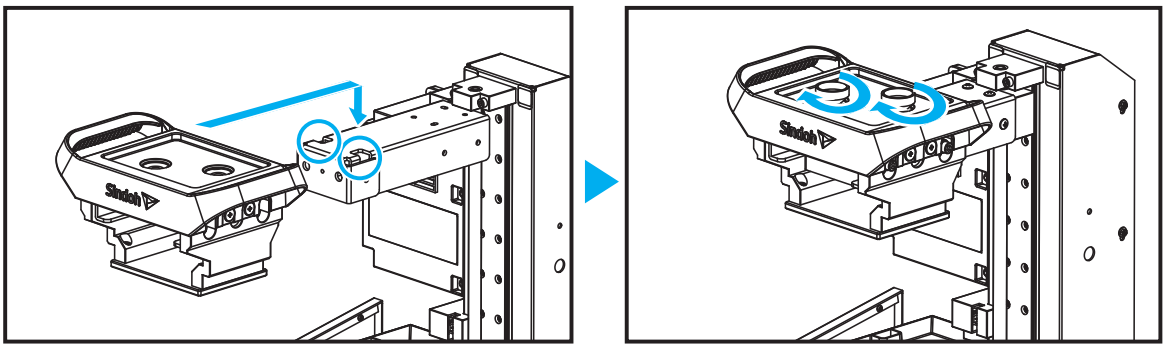

9 Connection to PC

① Direct Connection : Connects one end of the enclosed USB cable to the back of the device and the other end to the PC.

② Network Connection : Refer to “Network of 2.UI Menu Function”

10 Plug USB flash drive in, and install machine drivers and Slicer program.

Reference

- This device has been shipped out after performing platform leveling in the factory. However, to prevent print failure and to maintain the best printing quality, it is recommended to perform platform leveling process once again in case of setting up the device very first time or moving the device to another place.
  For details of platform leveling, refer to “Platform Leveling of 2.UI Menu Function”

⚠ Caution

- **Please attach the platform cover to the platform. When using the machine, the main drive of the machine may be damaged by not installing the platform cover.**

4.2 S/W Installation

1 Start the S/W installation by clicking on “3DWOX Desktop.exe” file in the enclosed USB flash drive.

2 Install the additional files required by the software list.

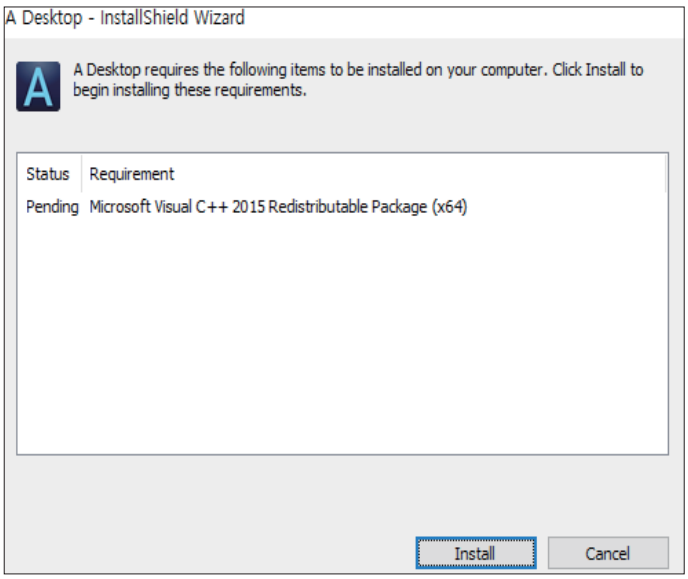

3 When installation of the additional files is done, a pop-up window shows up as the picture below. Press **[Next]** button to start the installation of A Desktop Program.

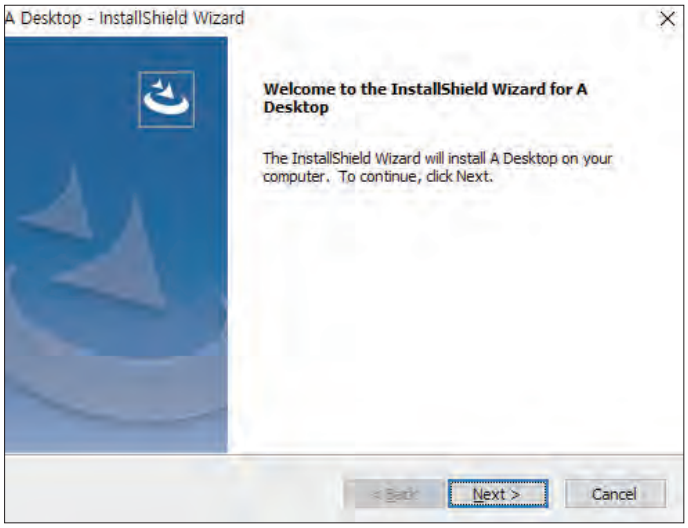

4 Choose the destination location of the files and press **[Next]** to proceed.

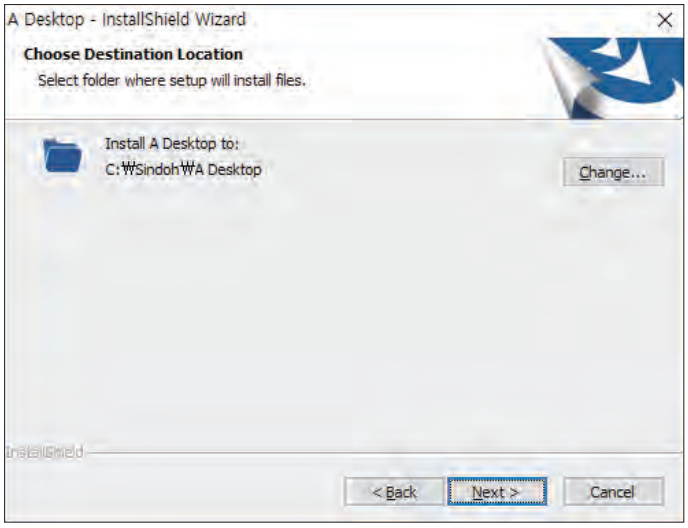

5 All configurations get saved and the installation starts.

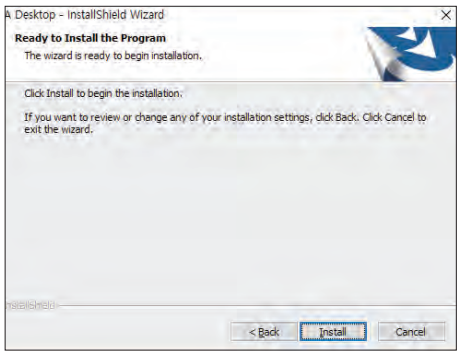

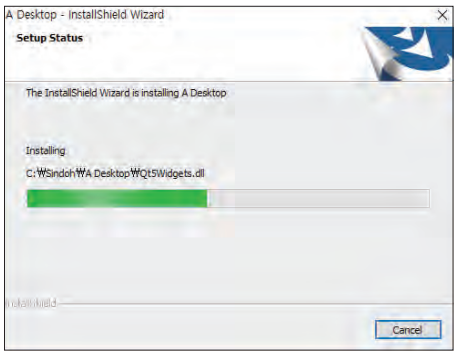

6 After all installation is complete, you can see that “A Desktop” icon created on the desktop of your computer.

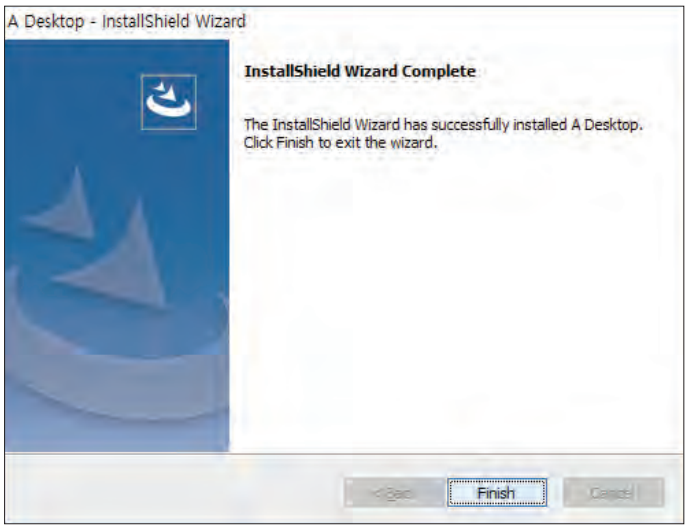

Sindoh A1^{SD} Series
USER MANUAL

UI Menu Function

2

1. UI Menu Function Descriptions

※ Please refer to ‘Chapter 3. Printing’ for Print menu.

Installed Resin		
Setting	XY Scale	
	Z Offset	
	Chamber Heating	
	The First Exposure	
	Platform Leveling	
	Cloud Monitoring	
	Level Printer	
	Network	
	Test Print	
	S/W Update	
	General Setting	Language
		Power Saving
		Beep
		Unit
		Voice Guide
		Time Setting
		Time Zone
		Security
		Exposure
	LCD Ispection	
Saved Files		
Info Statistics	History	
Quick Guide		
Program		
Cloud		

1.1 Home

The first screen that user can see when turning ON the machine.

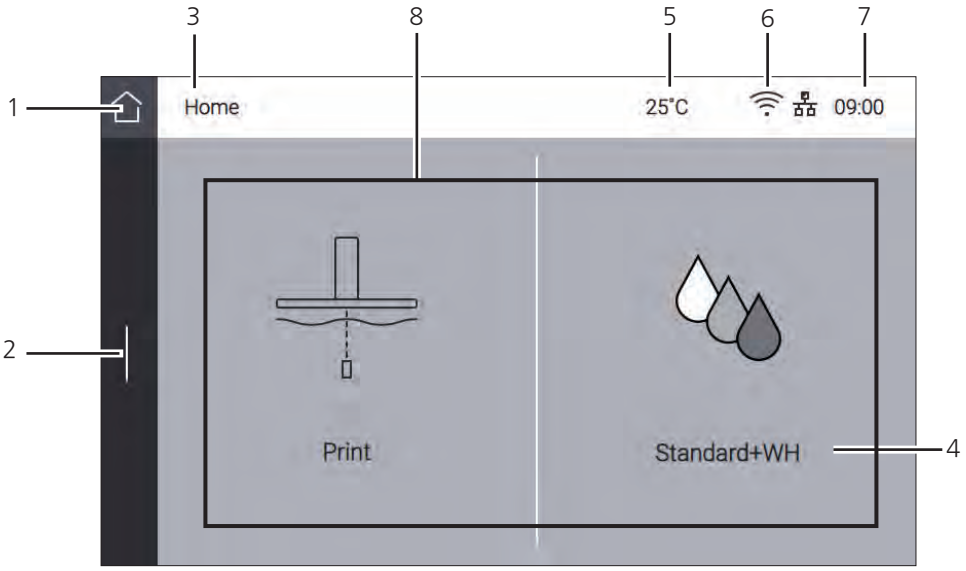

No.	Part Name	Description
1	**Home Button**	Go to Home screen. ※ When it's not Home screen, it changes to the Back( ) button.
2	**Slide Menu Bar**	Open up Slide Menu.
3	**Title**	Description on the screen you are currently working on.
4	**Installed resin**	The specified installed resin is displayed.
5	**Temperature**	Display the temperature inside the chamber.
6	**Network**	Displays network connection status. According to the network connection type, the following icons will be shown. : Wired : Wireless※
7	**Time**	Display the current time.
8	**Working Area**	Main workspace of UI screen.

※ May not be supported depending on model.

1.2 Installed Resin

It is used to designate the resin currently installed on the machine.

1 Press **[Resin icon]** from the Home screen.

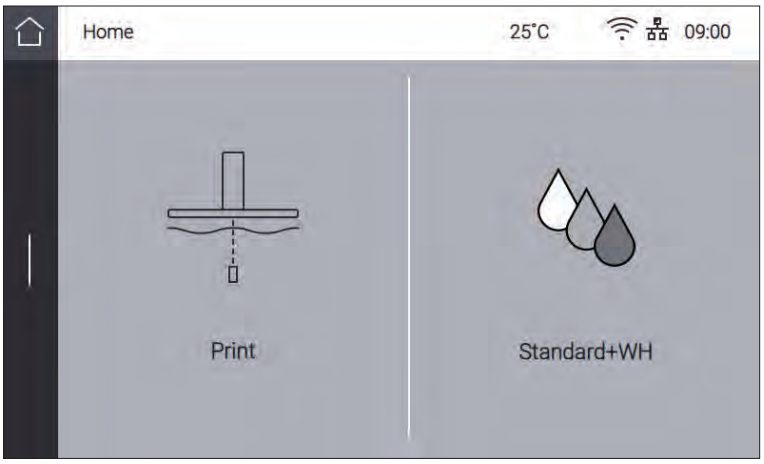

2 Select the resin currently installed on the machine.
If the resin information on the slider does not match, an error is displayed.

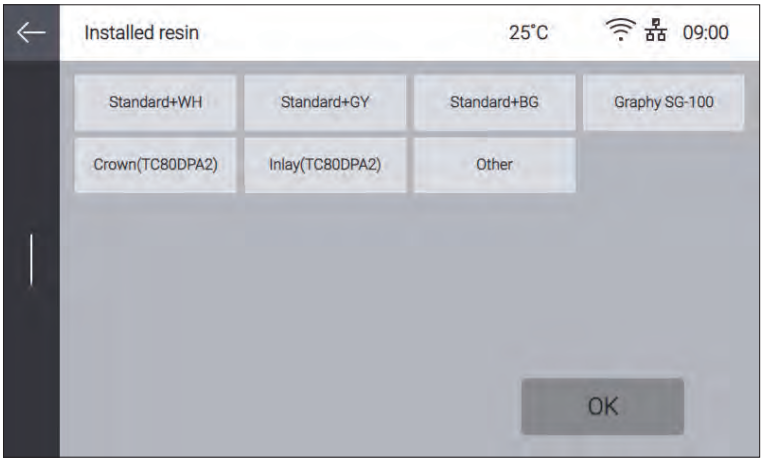

1.3 Setting

Setting	XY Scale	
	Z Offset	
	Chamber Heating	
	The First Exposure	
	Platform Leveling	
	Cloud Monitoring	
	Level Printer	
	Network	
	Test Print	
	S/W Update	
	General Setting	Language
		Power Saving
		Beep
		Unit
		Voice Guide
		Time Setting
		Time Zone
		Security
		Exposure
	LCD Ispection	

XY Scale

If the actual printing size differs from the designed model size, this function allows users to adjust the thickness error range and the horizontal(X)/ vertical(Y) scale of the print output. If you are not familiar with the machine, you can use the semi-auto calibration (adjustment) function, which suggests corrected (corrected / adjusted) values after measuring the print output size.

1 Press **[Slide Menu Bar]** from the Home screen.

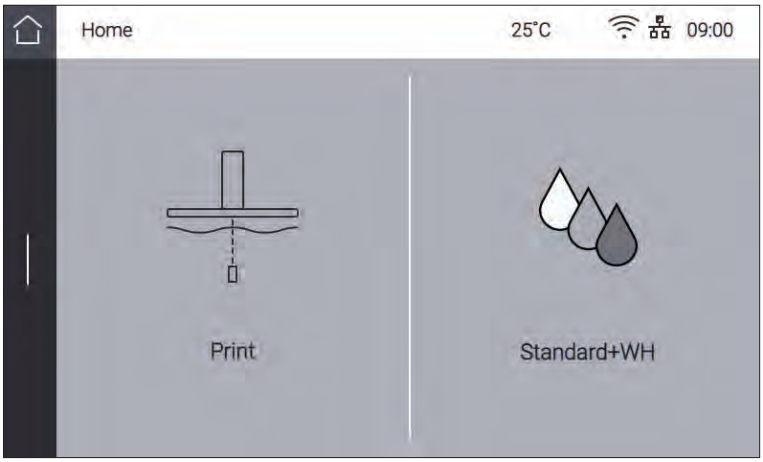

2 Press **[Setting]** from the Menu screen.

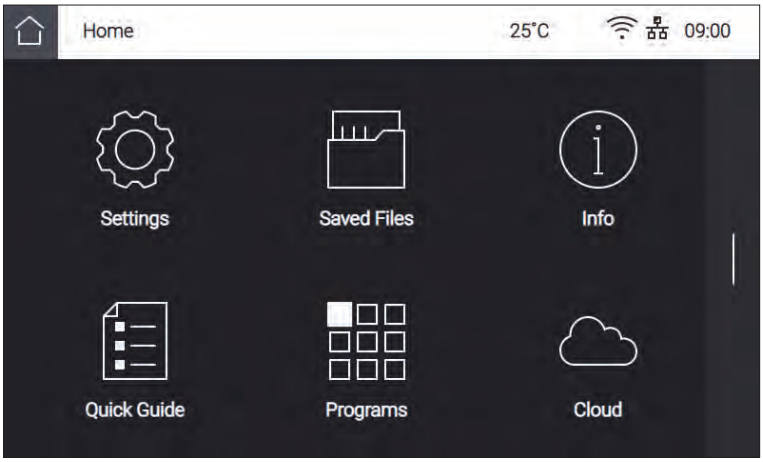

3 Press **[XY Scale]**.

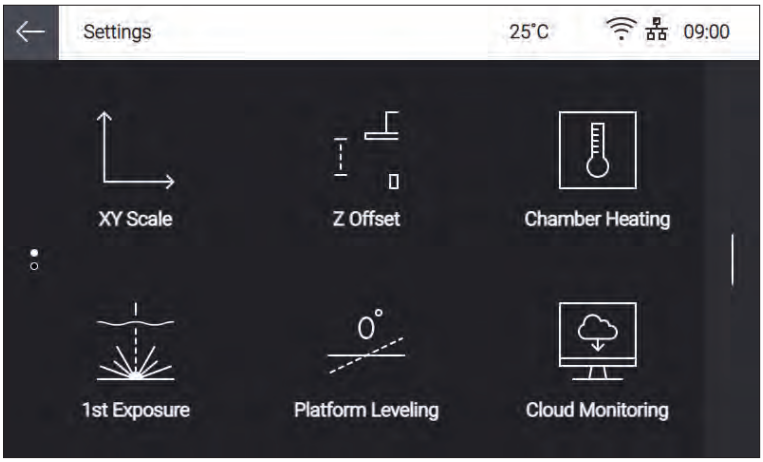

4 XY scale(%) and XY thickness error(㎜) range reconfiguring screen appears..
X, Y(%) : Adjust the scale of model in X/Y axis.
Xt, Yt(㎜) : You could modify the thickness(㎜) of outlines.

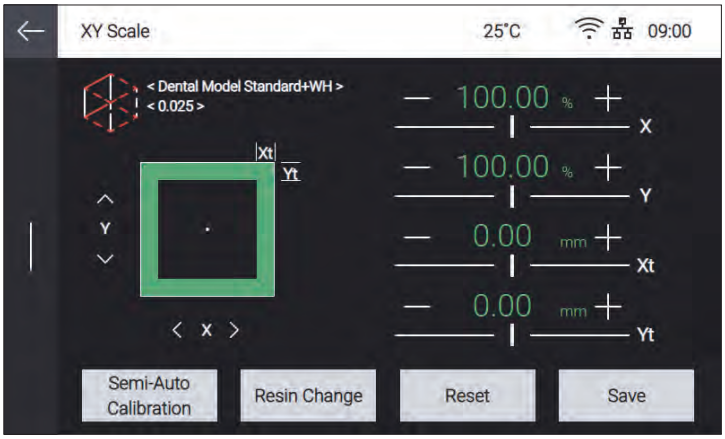

5 You can adjust and manage the printing scale for each resin separately. To select a resin type, press the **[Resin Change]** button and choose the resin type with the **[<]** or **[>]** button, then press the **[Save]** button.

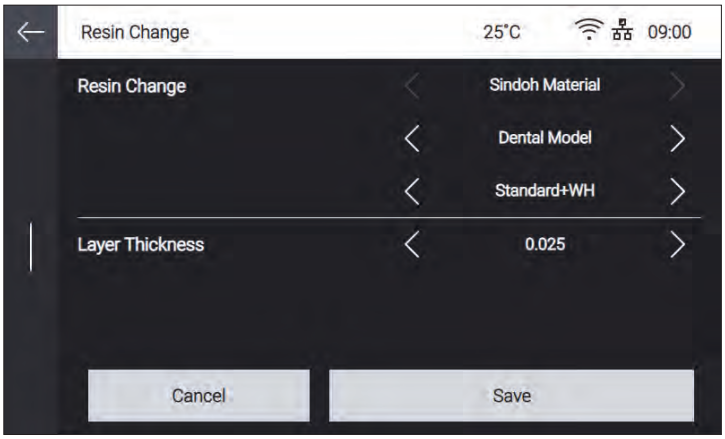

6 Adjust each value with the slide bar or by pressing **[+]** or **[-]**. XY scale can be adjusted by 0.01% from 95.0% to 105.0%. XY thickness error can be adjusted by 0.01mm from -0.5 mm to +0.5 mm. Then, press **[Save]** to save the setting values.

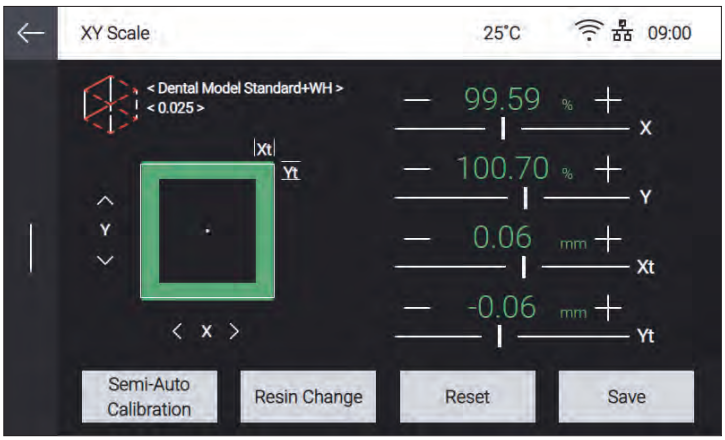

7 To see a suggested device calibration value, press **[Semi-Auto Calibration]**.

8 The semi-auto calibration is a function to see a suggested corrected value of the machine by printing out a pattern and measuring its dimensions.

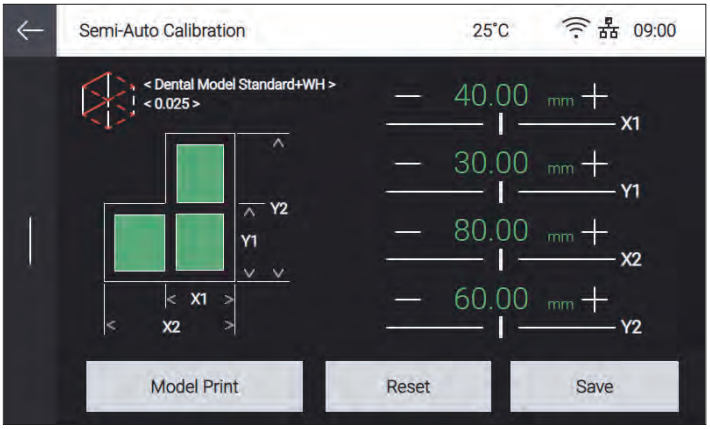

9 Press [Print] to print out an embedded pattern.
With the print output attached to the platform, measure X1, X2, Y1, and Y2 as shown in the picture.

10 Adjust each measured value with the slide bar on the screen or by pressing [+] or [-].
Measured values of X1 and Y1 can be entered, ranging from 66.5 mm to 73.5 mm, and changed by 0.01 mm.
On the other hand, measured values of X2 and Y2 can range from 133 mm to 147 mm, and be changed by 0.01 mm.

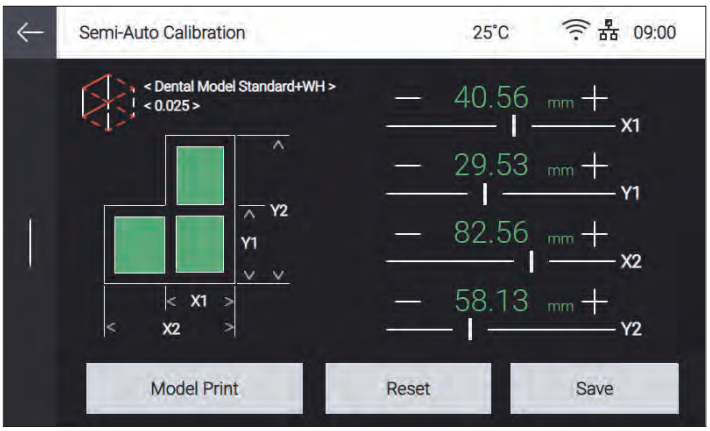

11 After all measured values are entered, press **[Save]** to save the measured values, and then move to the previous page.

12 Check the corrected value input, which is suggested with the measured value, and then press **[Save]** to save the setting values.

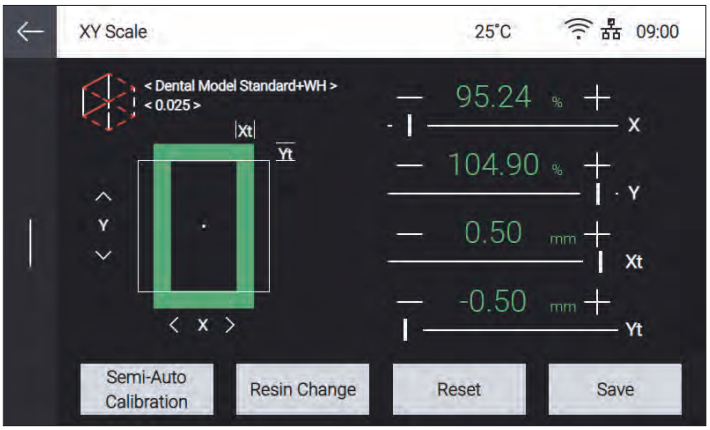

Z Offset

This function allows users to adjust the distance between platform and resin tank to change the thickness of the first layer of raft.
Change Z Offset value to **[-]** direction in case of printing failure caused by a drop of raft.
On the other hand, change Z offset value to **[+]** value to increase raft thickness in case that raft is thicker than specified.

1 Press **[Slide Menu Bar]** from the Home screen.

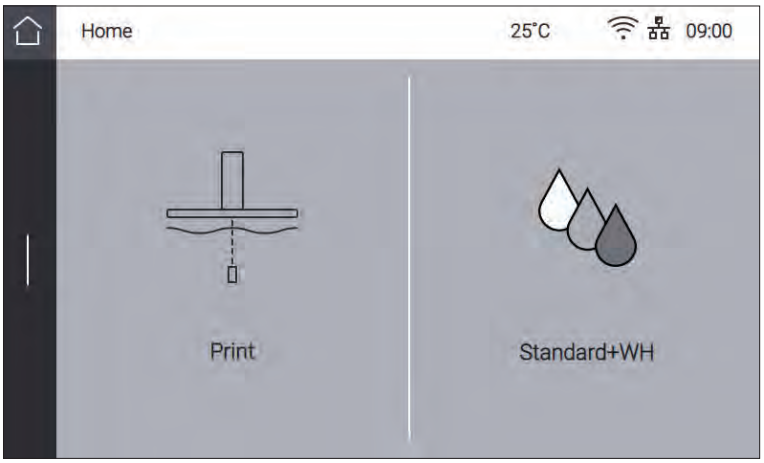

2 Press **[Setting]** from the Menu screen.

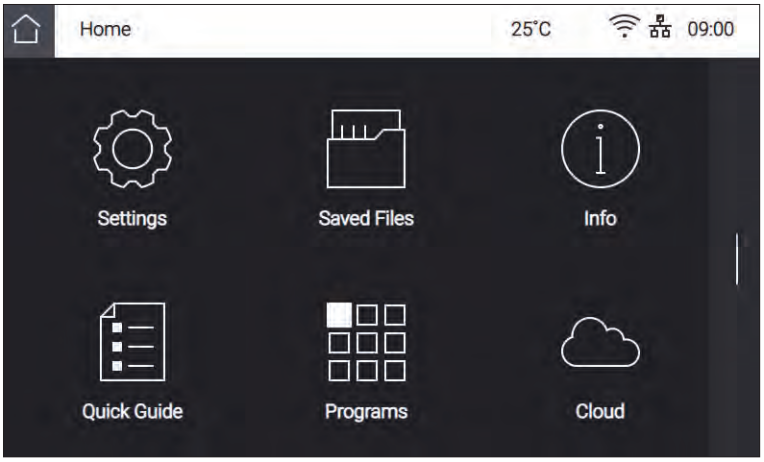

3 Press **[Z Offset]**.

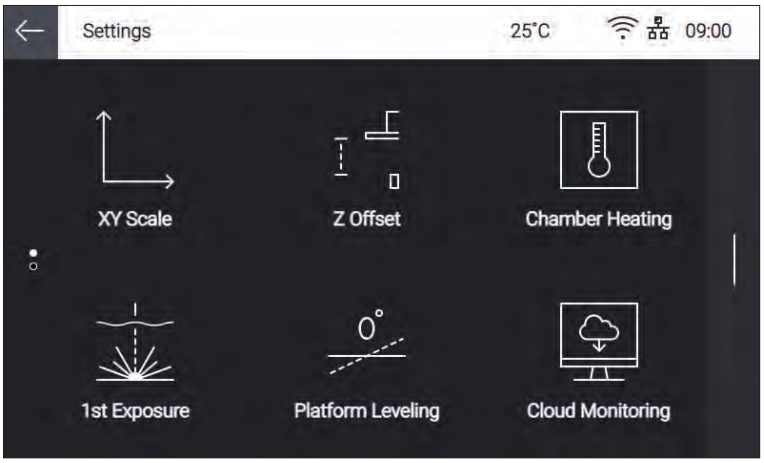

4 Z Offset screen shows up.

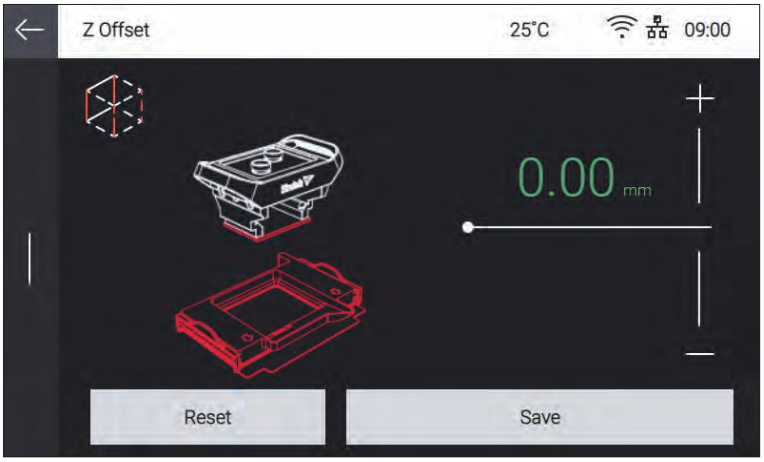

5 Change a value by pressing **[+]** or **[-]** until it reaches the target number. Adjustable range is -0.05mm~+0.5mm in 0.05mm unit. Press **[Save]** when finished.

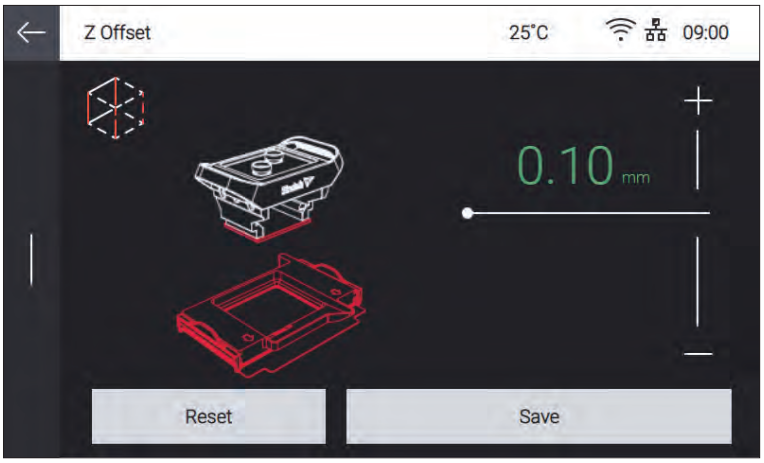

Chamber Heating

This option allows the user to turn on/off the use of the heater.

If the 3rd party resin that Sindoh does not supply is used, the print quality is not guaranteed by using the heater.

Important

- In the case of using Sindoh proprietary resin, you should keep the chamber temperature at the right level using the heater for the best printing quality. We recommend to set ON in this case.

1 Press **[Slide Menu Bar]** from the Home screen.

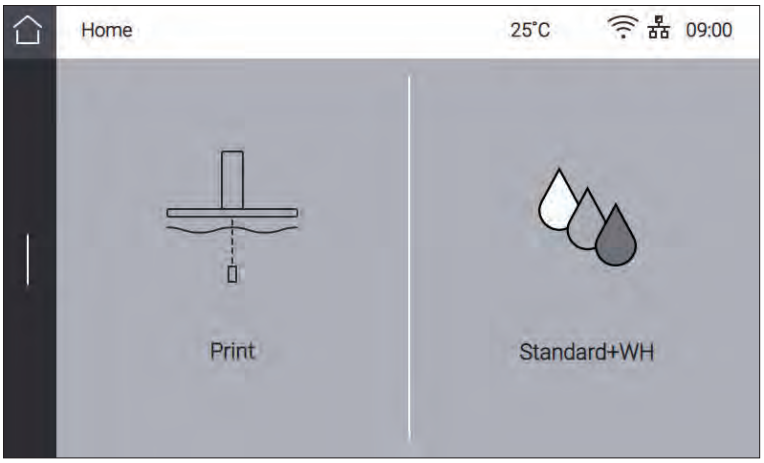

2 Press **[Setting]** from the Menu screen.

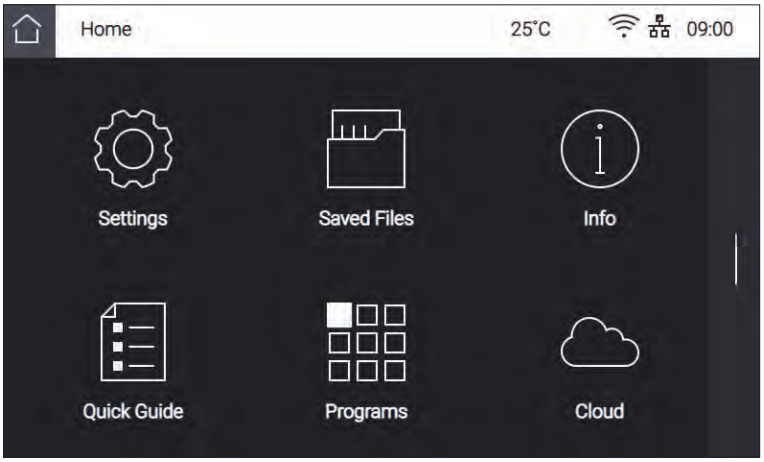

3 Press **[Chamber Heating]**.

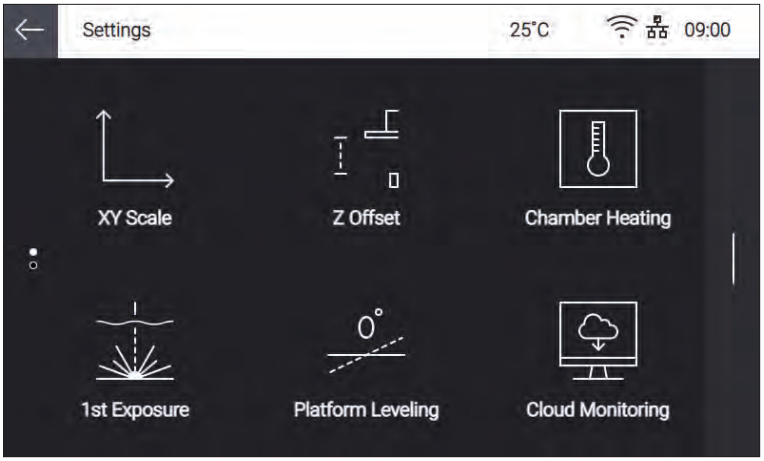

4 It is a notice message notifying that the machine doesn't guarantee the printing quality in Open Mode.
If you agree on the message of pop-up window, press **[Done]** to continue.

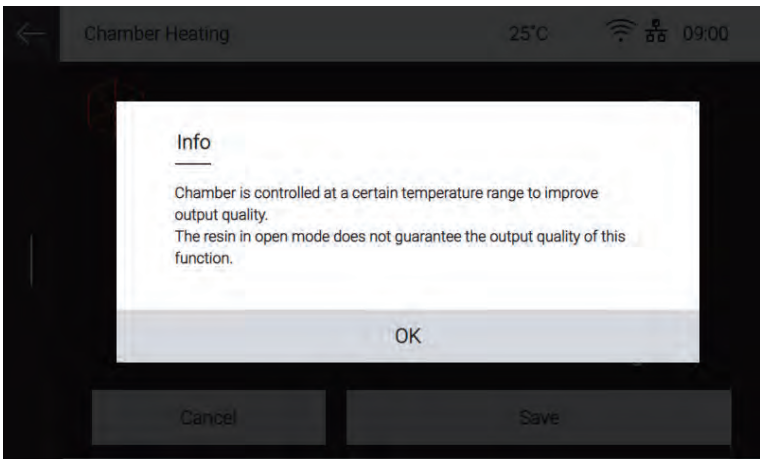

5 Select **[Off]** or **[On]** for the Enable Chamber Heating.
After selecting the Enable Chamber Heating **[On]**, select **[Off]** or **[On]** of the Enable Pre Heating.
Enable Pre Heating mode in **[On]**, select temperature **[25℃]** or **[High]**.
Click Save to save the settings.

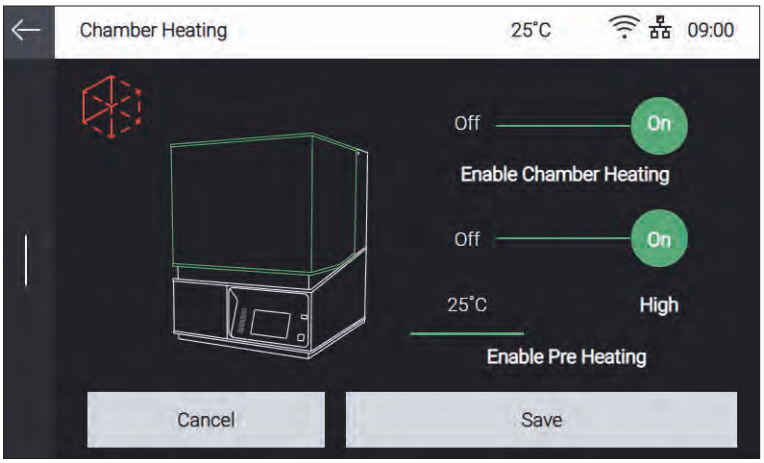

⚠ Caution

- **If you select [On] to the Enable Pre Heating mode, the heater will always operate, so be careful about power consumption.**
- **If you select [High] in the Enable Pre Heating mode, the chamber temperature increases. Please be careful of using for a long time may affect the resin's performance.**

The First Exposure

This function is used to change the strength at which the Raft is attached to the platform.
The bond strength can be changed by adjusting the Exposure Time of the first raft.
Adjusting the Exposure Time in the **[+]** direction increases the bond strength, and adjusting in the **[-]** direction decreases the bond strength.

1 From the Home screen, press the **[Slide Menu Bar]** button.

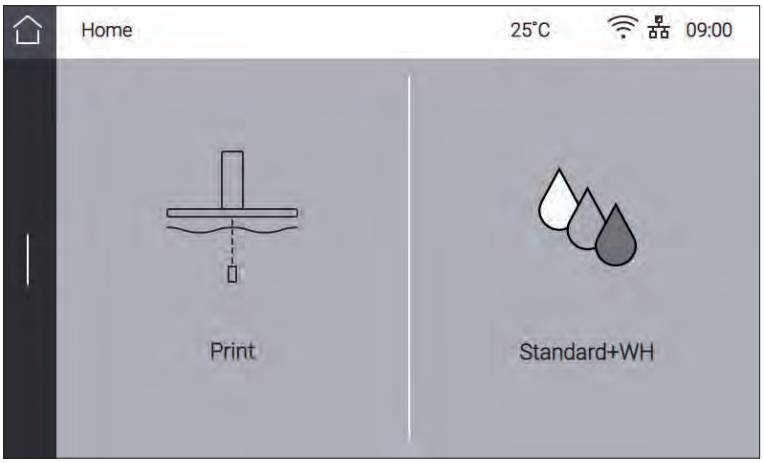

2 On the Menu screen, press **[Settings]**.

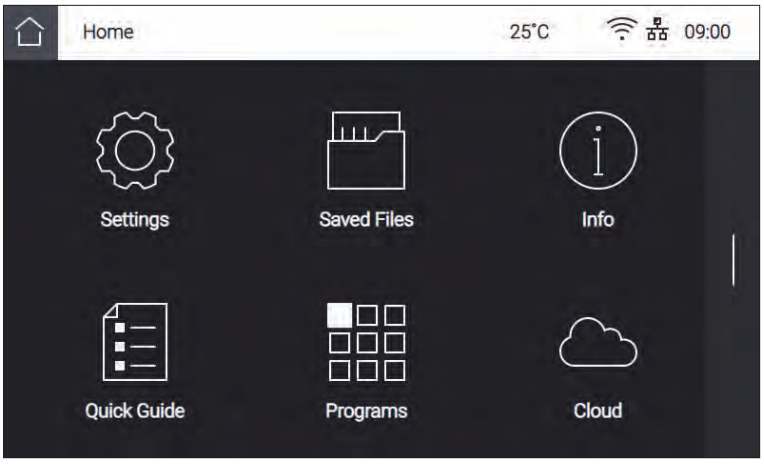

3 Press **[1st Exposure]**.

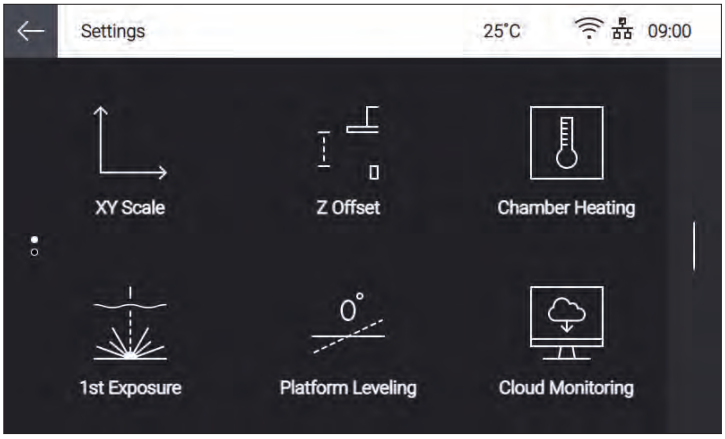

The screen changing the exposure time according to the type of resin will appear. First, select the type of resin to change the exposure time . Then, press the **[+]** or **[-]** button to set the exposure time for the selected resin type. The adjustment can be incremented or decremented by 0.5 sec by pressing the active **[+]** or **[-]** button. When finishing

adjustment, press **[SAVE]** to save the setting value. Press **[RESET]** to change Exposure-adjusting time of the selected resin type to the initial value '0'.

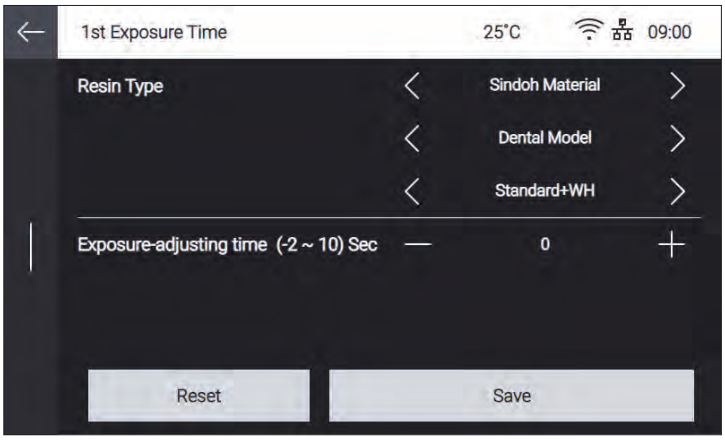

Platform Leveling

This function allows users to make an alignment of platform with resin tank.

1 Press **[Slide Menu Bar]** from the Home screen.

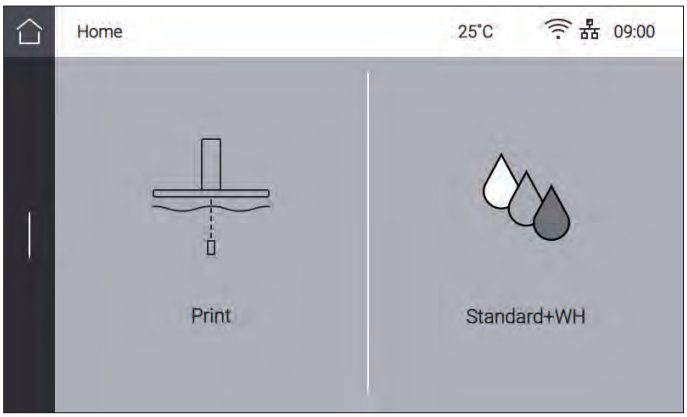

2 Press **[Setting]** from the Menu screen.

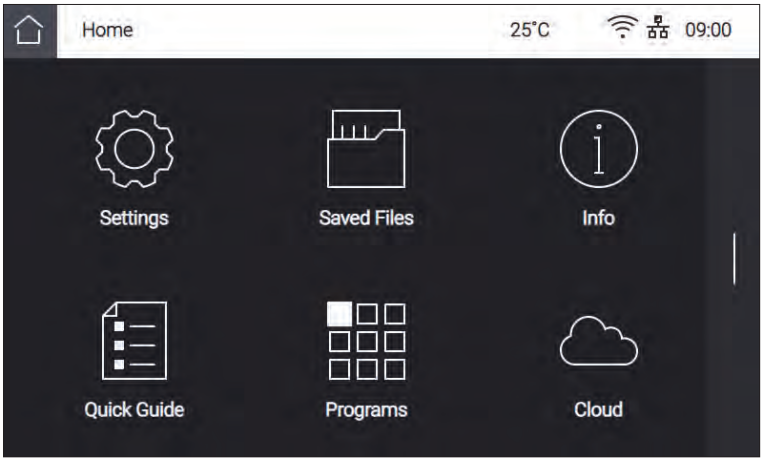

3 Press **[Platform Leveling]**.

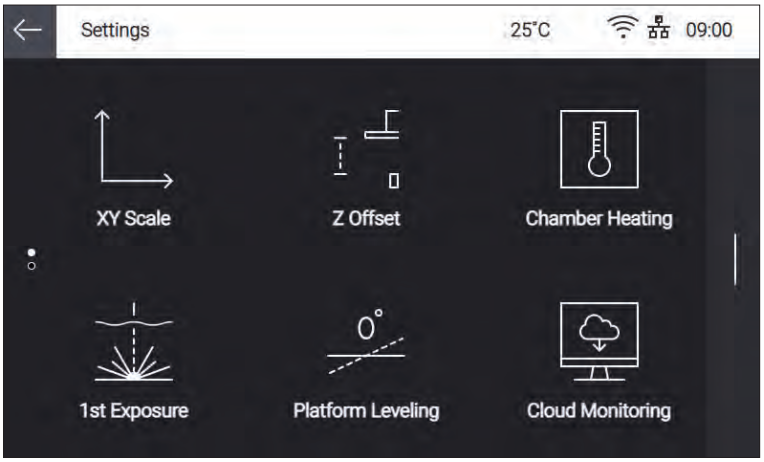

4 Remove all resin remaining in resin tank. Refer to “Resin tank of 5.Maintenance” for details of how to remove resin from the resin tank.
Please note that leveling wil fail or won’t work precisely if resin still remaining in the resin tank.

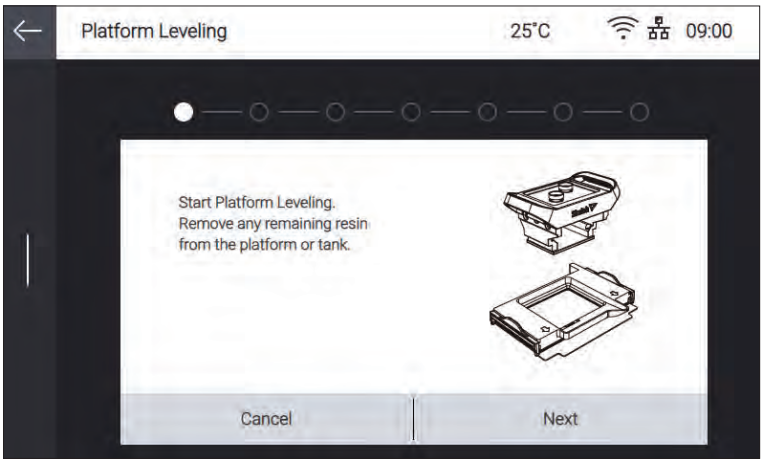

5 Platform rises. Click **[Next]** when the Platform lifting completion message shows up.

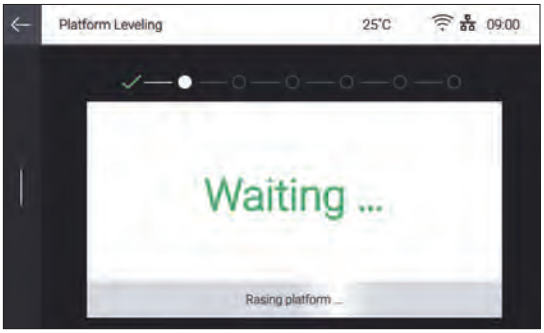

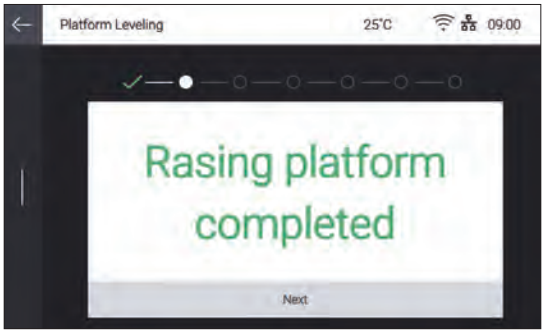

6 Loosen six platform locking screws with a T-handle hexagon wrench, and press **[Next]**.

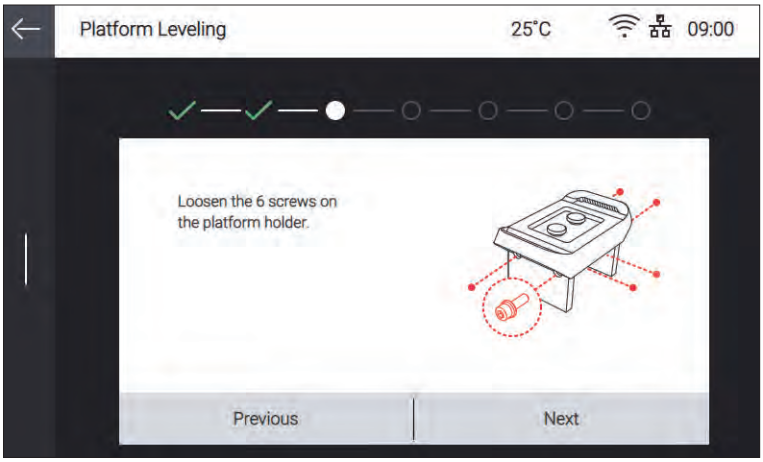

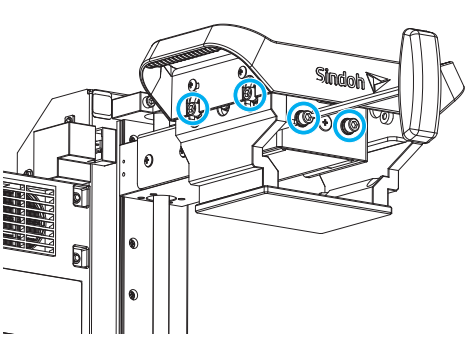

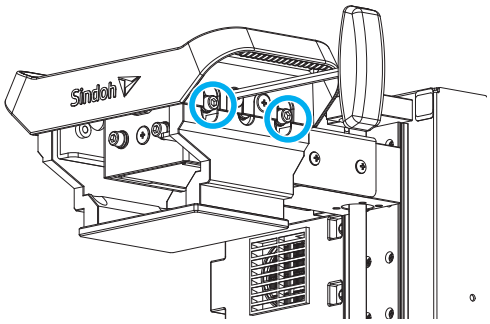

⚠ Caution

- **Do not completely remove the screws from the platform and just loosen them up. If you try to remove the screws, they may drop onto the resin tank, and damage the release film and LCD protective glass.**

7 The platform moves down. When the screen indicates that the lowering is complete, press **[Next]**.

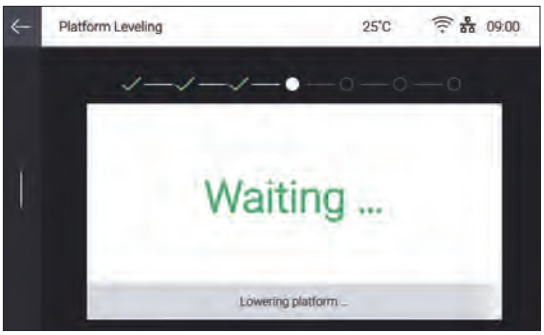

8 When the platform lowering is complete, fasten back the six platform locking screws using a T-handle hexagon wrench, and press **[Next]**

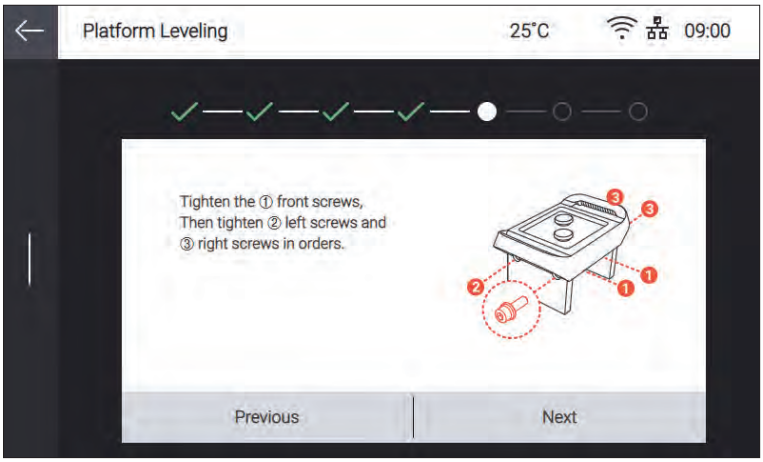

Lock the platform locking screws in the following order: ① front side → ② left side → ③ right side.

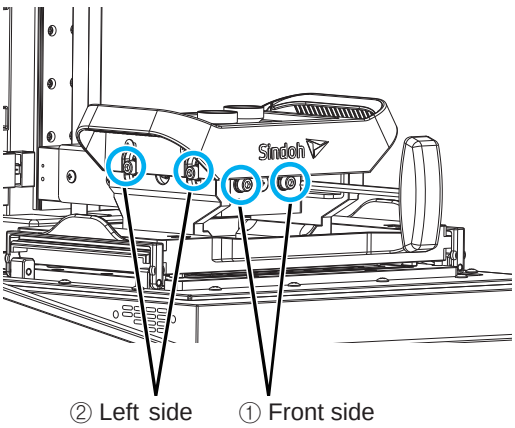

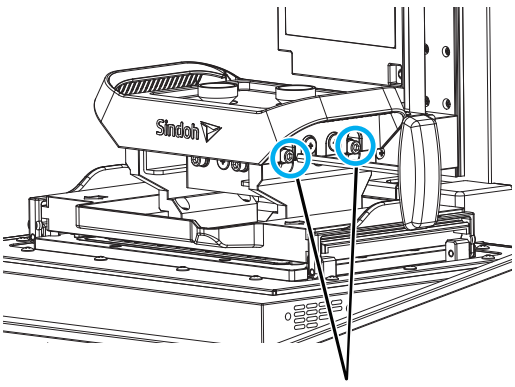

Important

- Make sure to lock the platform locking screws in the specified order.
- If the platform locking screws are not locked in the specified order, the platform leveling may fail, resulting in failed printing.

9 Check the gap of the platform and the resin tank using enclosed gap gauge.
The gap of all 4 corners as shown in instruction of UI needs to be checked. If gap gauge is inserted into any corners, it would mean platform is not leveled well. Press **[Restart Platform Leveling]** to perform the platform leveling process again.
If gap checking is OK, press **[Next]**.

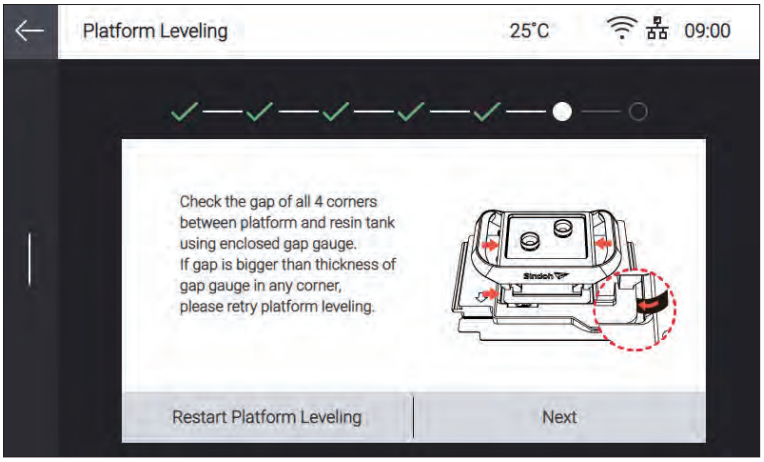

10 The platform moves up. When the screen indicates that the raising is complete, press **[Next]**.

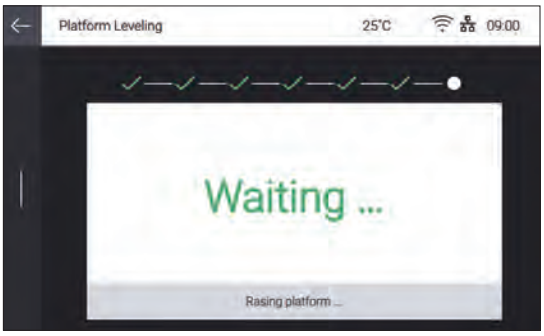

11 Check if the screws are fully tightened, and then press **[Finish]**.

Cloud Monitoring

This function lets users check the state of the machine remotely and send management data through email.

1 Press the **[Slide Menu Bar]** button from the home screen.

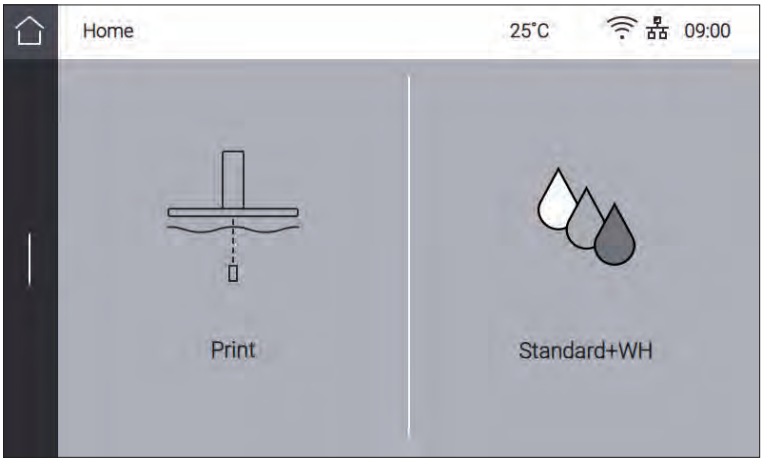

2 Press **[Setting]**.

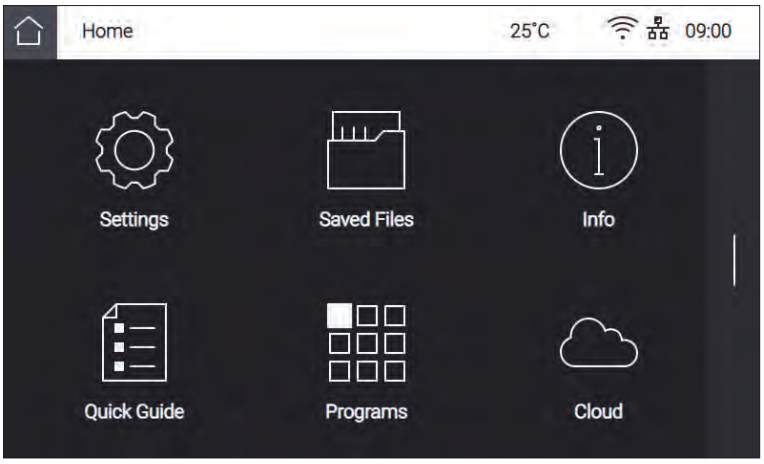

3 Press **[Cloud Monitoring]**.

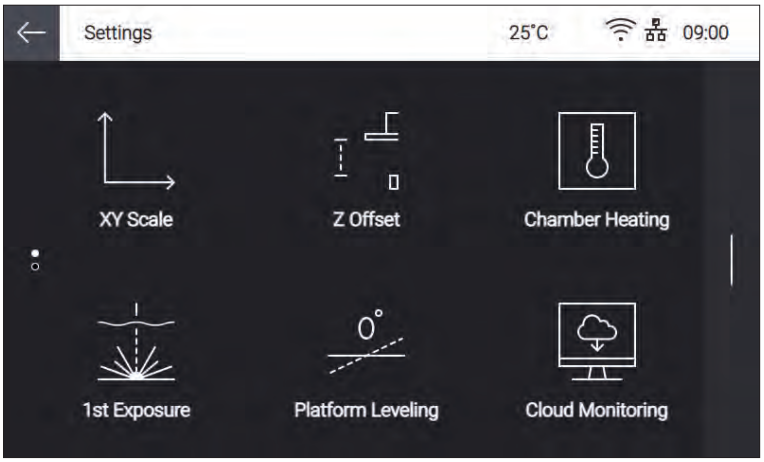

4 Select **[Off]** or **[On]**, and then press **[Save]** to save the settings.

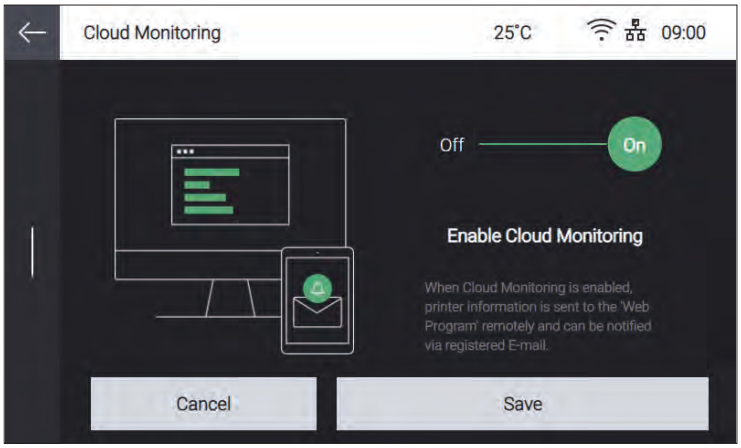

Level Printer

This function lets users level the printer.

Important

- Sensor which is used to display the level or the printer should be used within the proper tempearature(20~30 ℃) in order to prevent malfunction. Please run the level printer process after checking if ambient temperature is proper.

1 Press the **[Slide Menu Bar]** button from the home screen.

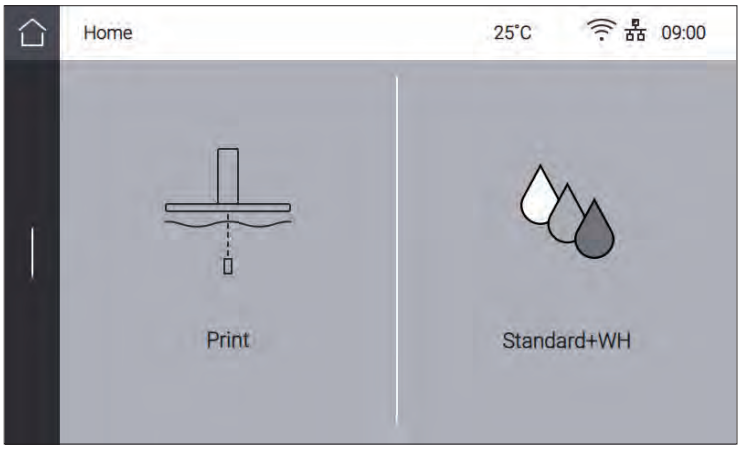

2 Press **[Setting]**.

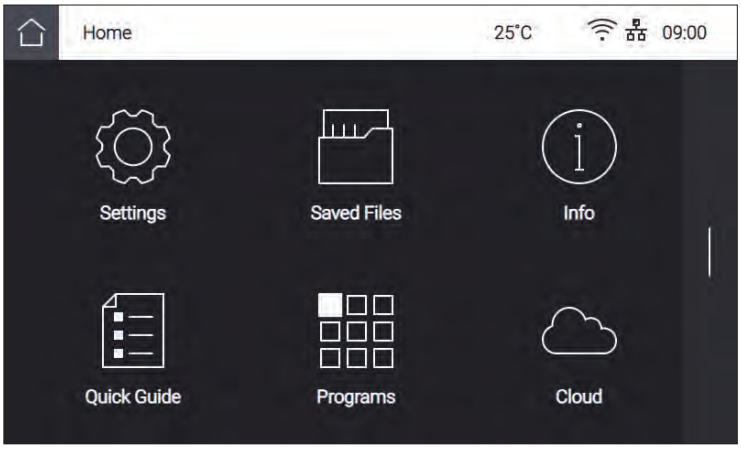

3 Swipe up the screen, and then select **[Level Printer]**.

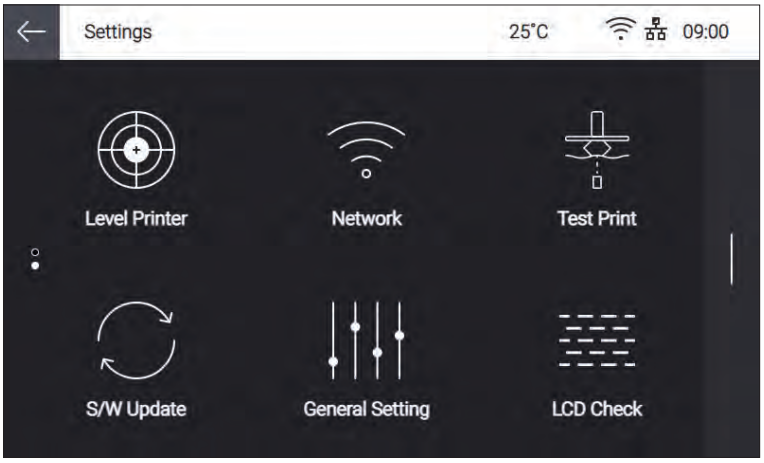

4 The screen shows the leveling state of the printer.

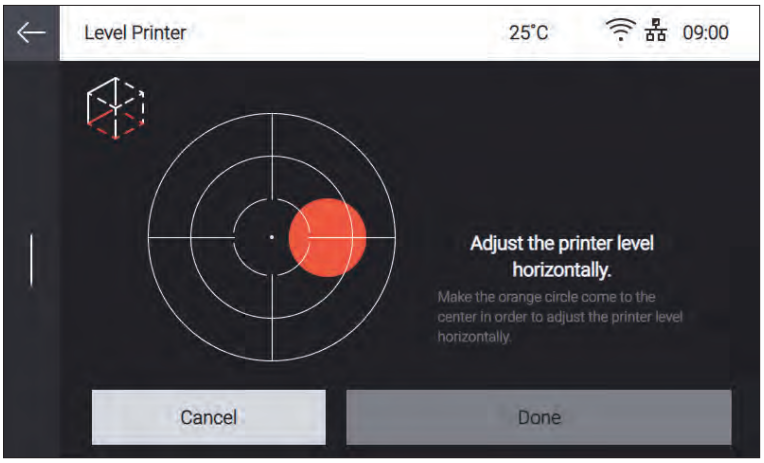

The leveling state screen shows the level of the machine with a circular level, which is commonly found in a washing machine. The circular level shows the level state with a bubble.
Level the printer so that the orange circle of level is centered.

Circular level

5 With the enclosed spinner, properly turn the leveling screws located at the bottom of the printer to level the machine.

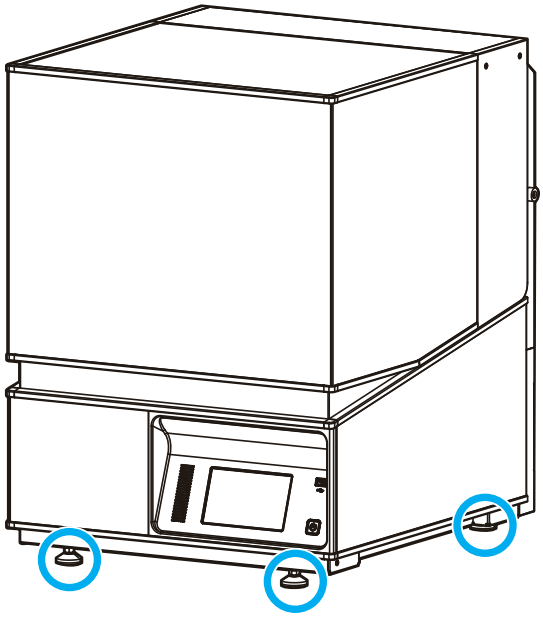

Turn the leveling screws counterclockwise to lower the printer.

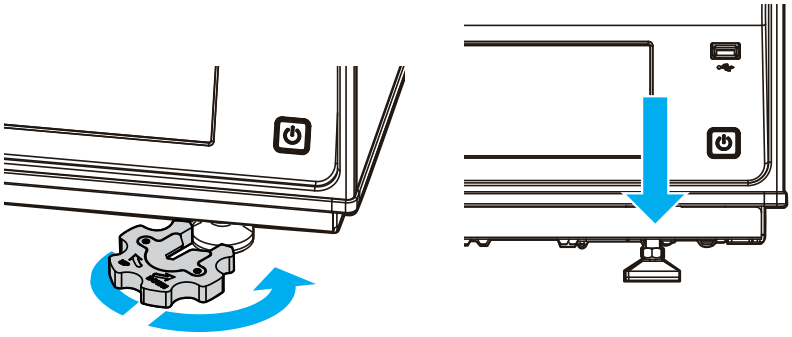

Turn the leveling screws clockwise to raise the printer.

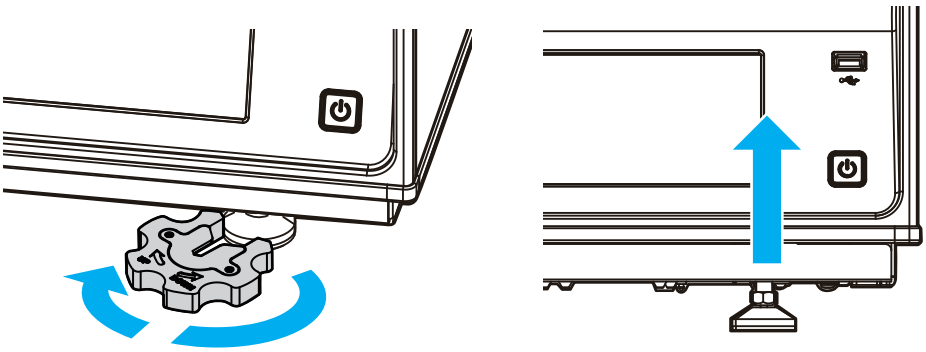

Level it so that the bubble is centered in the level and turns green. Once the bubble turns green, the **[Done]** button will be activated so that the leveling procedure can be completed.

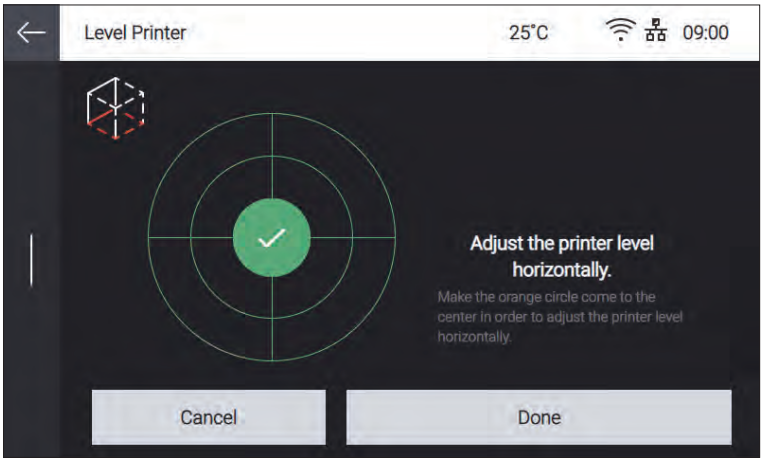

⚠ Caution

- **If the leveling screws are turned clockwise too much, they may be removed from the printer. To prevent this, turn them counterclockwise to lower any higher corner.**
- **Make sure that the four leveling screws touch the ground. If any of them does not touch the ground, the printer may suddenly move during the operation, resulting in noise or overflowing resin.**

6 With the screen indicating that the level printer procedure is complete, it will automatically return to the home screen.

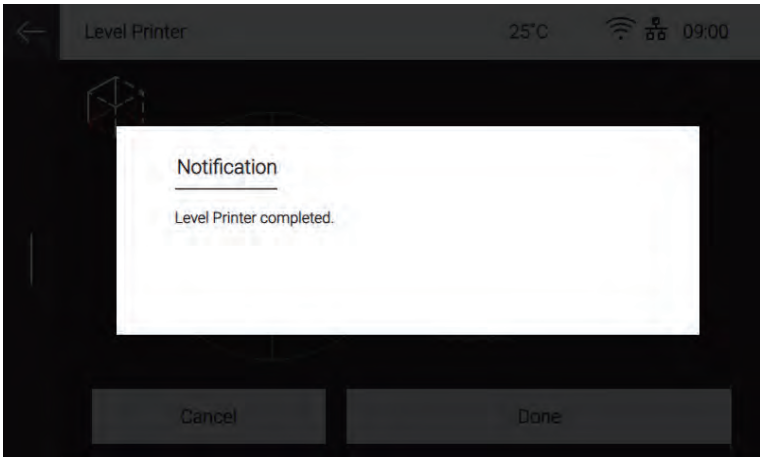

Network

This function let users to set up network configurations of the device. Both wired and wireless LAN can be configured in details.

Important

- Using both wired and wireless network simultaneously is not recommended for electric devices which can be connected to network. Due to characteristics of network communication, data may not be processed properly when data is coming in via both wired and wireless network.

1 Press **[Slide Menu Bar]** from the Home screen.

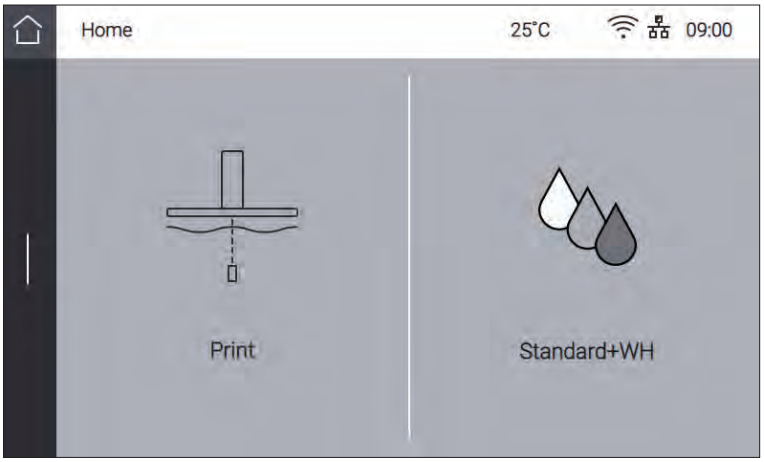

2 Press **[Setting]** from the Menu screen.

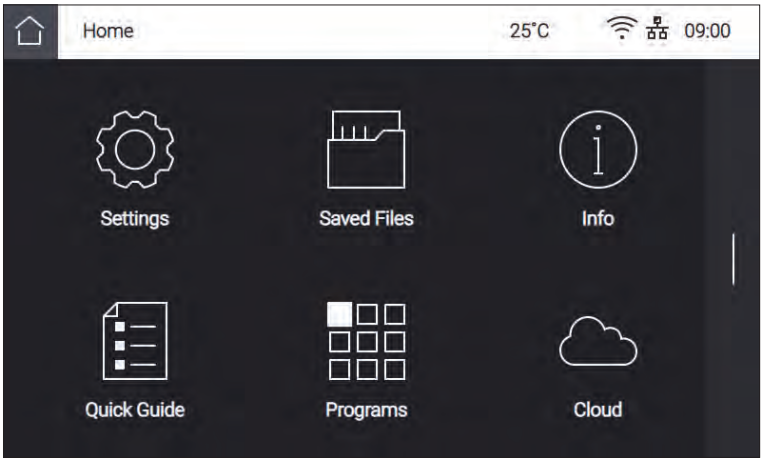

3 Swipe the screen upward, and press **[Network]**.

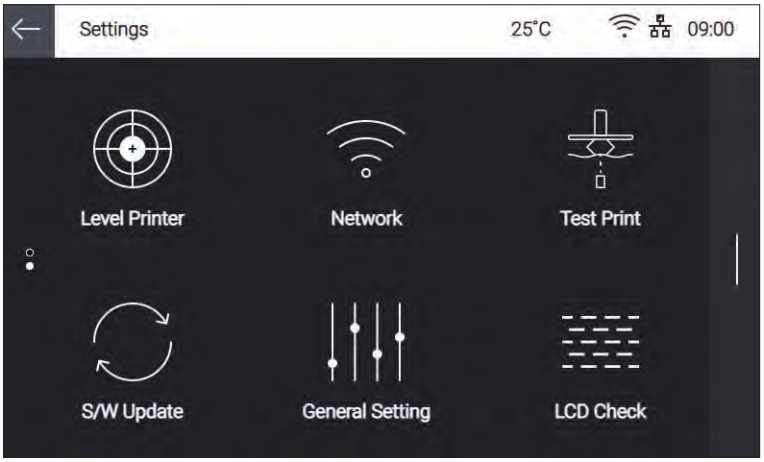

4 Network setup screen shows up.

Enable to choose wireless or wired connection according to your network connection provider.

- Wireless (Wifi) Setting

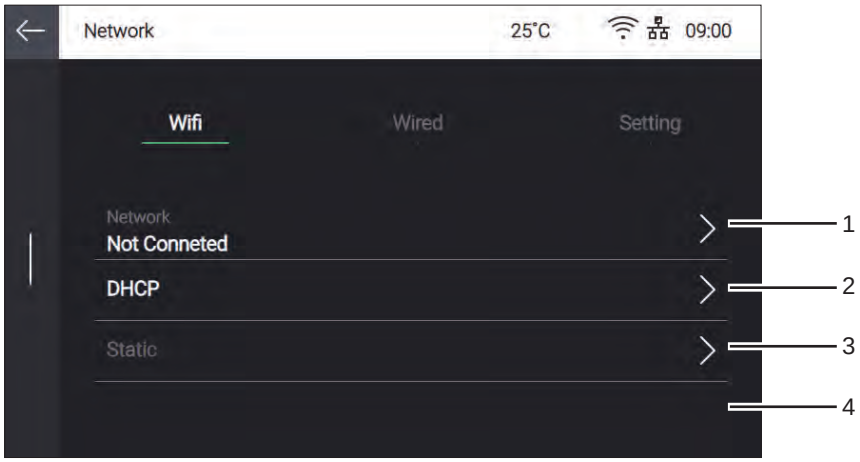

No.	Part Name	Description
1	**ON/OFF**	Turn ON or OFF Wifi.
2	**Network Name (SSID)**	Select SSID or enter the name manually if can't find the one you're looking for.
3	**DHCP**	Allocate IP address automatically.
4	**Static**	Enter static IP address to use static IP connection.

Reference

- Wireless (Wifi) Lan card may not be equipped depending on the model.
  In this case, the Wireless Setting button will be disabled and won't be selected.

5 As pressing [Network] button, list of SSIDs is displayed. Select a SSID you want to connect, and press **[Save]** to store the setting.

If selected SSID requires password, enter it.

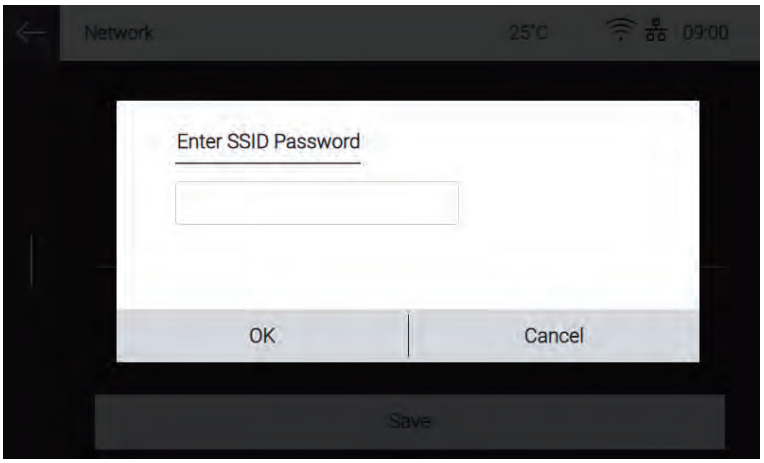

Select DHCP if the SSID gets IP automatically assigned from the network provider. As press **[Connect]**, it will connect to the internet with the SSID. If connecting successfully, the assigned IP will be shown.

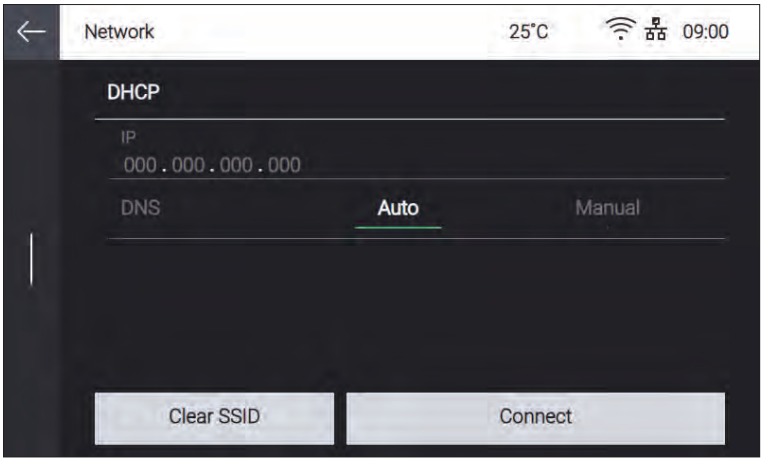

Press **[Static]** in the network setting screen if a fixed IP address is required. Press the pen icon **[ ]** on the right to enter the IP address manually. Then, press **[Connect]** to connect to an SSID.

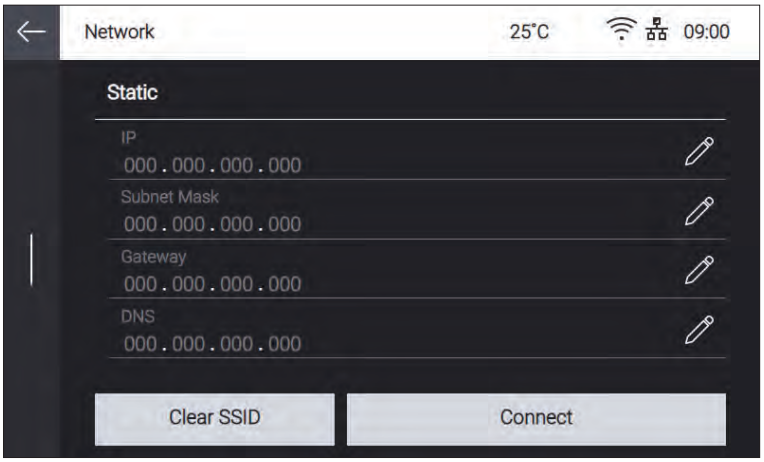

- Wired LAN Setting
  For wired LAN, DHCP and fixed IP settings can be selected to connect to the network in the same procedure as the Wi-Fi.

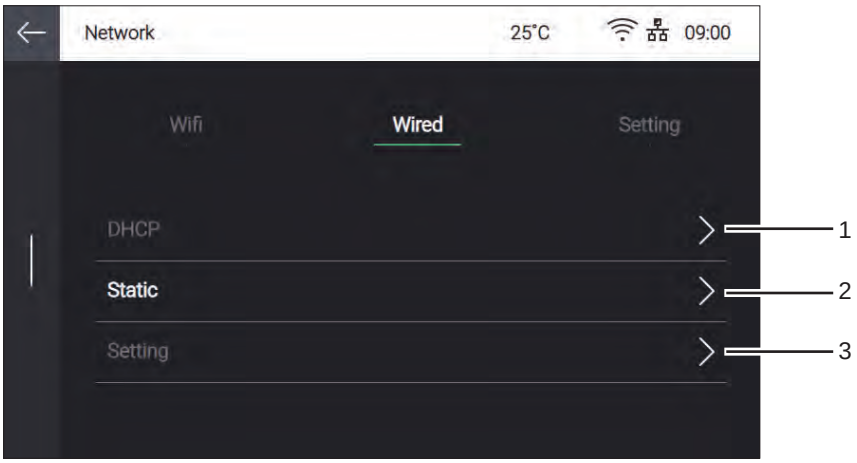

No.	Name	Description
1	**DHCP**	Select it to allocate IP addresses automatically.
2	**Static**	Select it to allocate fixed IPs.
3	**Setting**	The network speed can be set.

Test Print

This function allows users to print a sample model already saved in the internal memory of printer.

1 Press **[Slide Menu Bar]** from the Home screen.

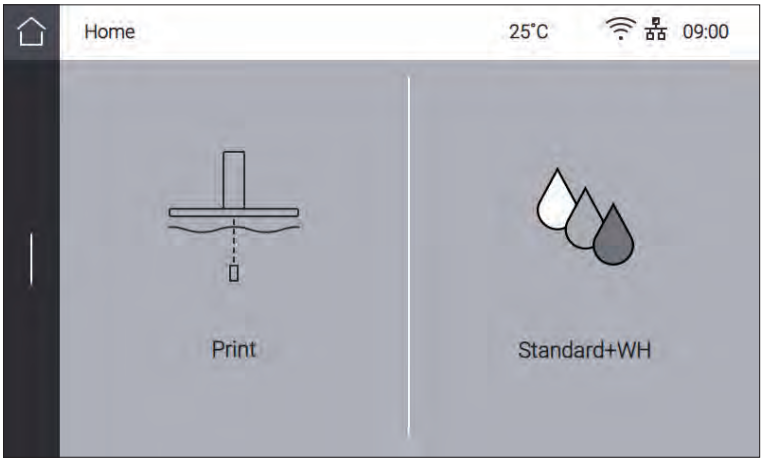

2 Press **[Setting]** from the Menu screen.

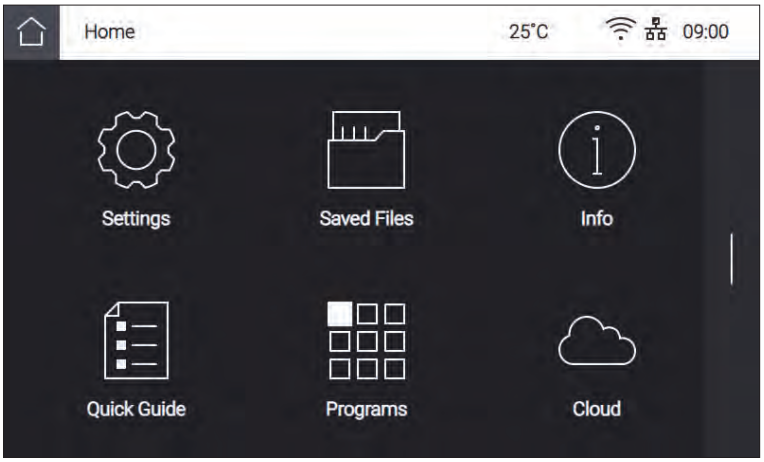

3 Swipe up the screen, and then select **[Test Print]**.

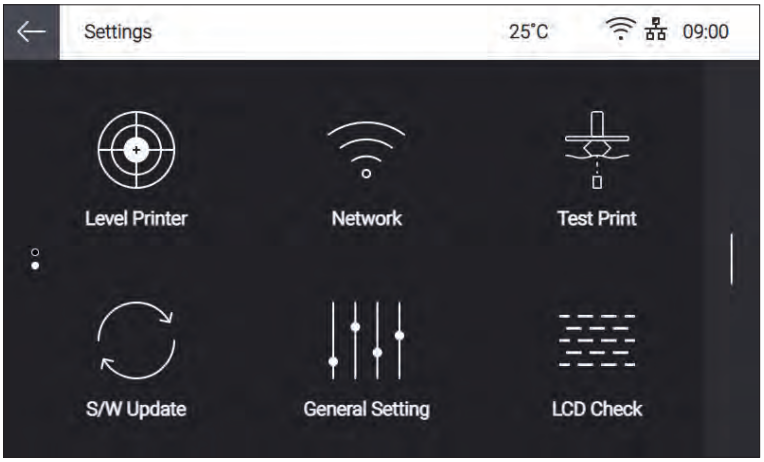

4 The example files of the machine are listed. Select a file to print.

5 Press the [i] button to preview the information of the file to print.
The information of the selected file is displayed.

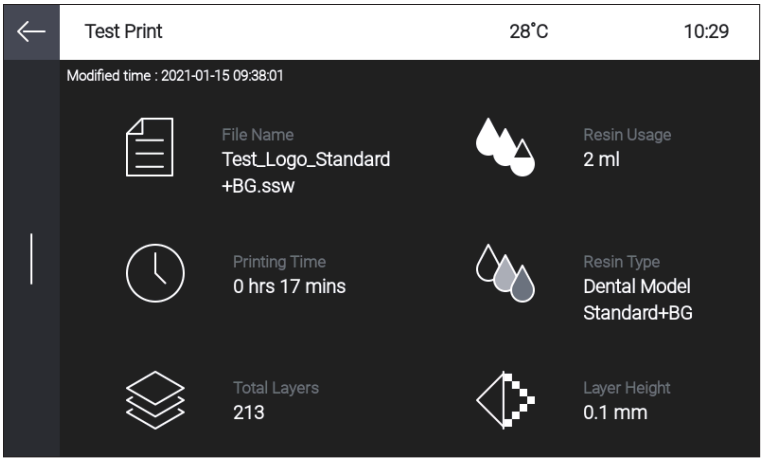
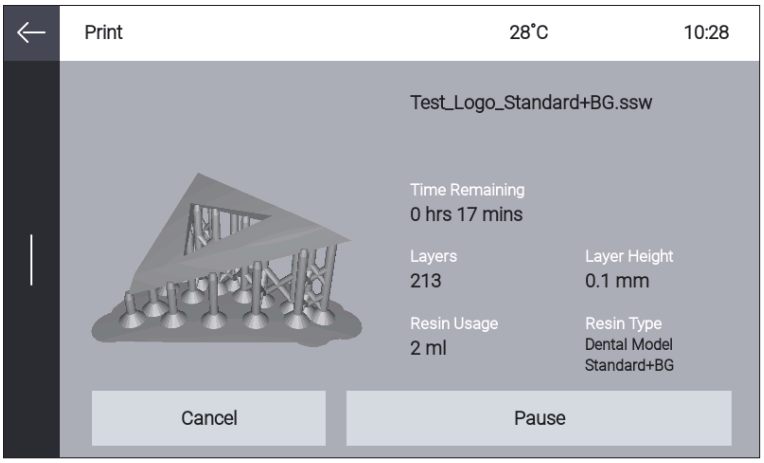
6 Press the [ ] button of the file to print to start printing.