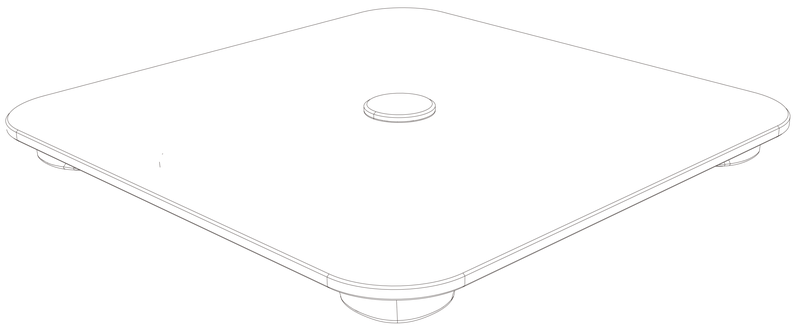

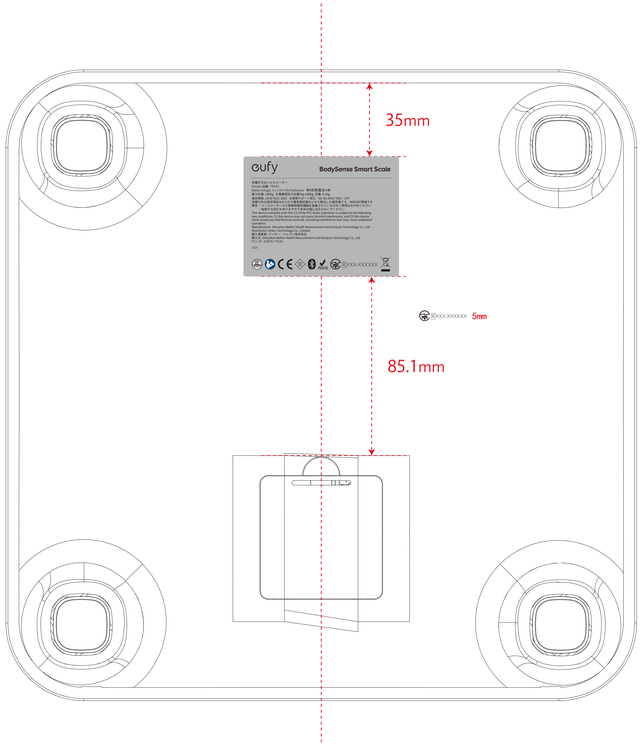
35mm
eufy
BodySense Smart Scale
5mm
85.1mm

74mm
eufy
BodySense Smart Scale
57mm