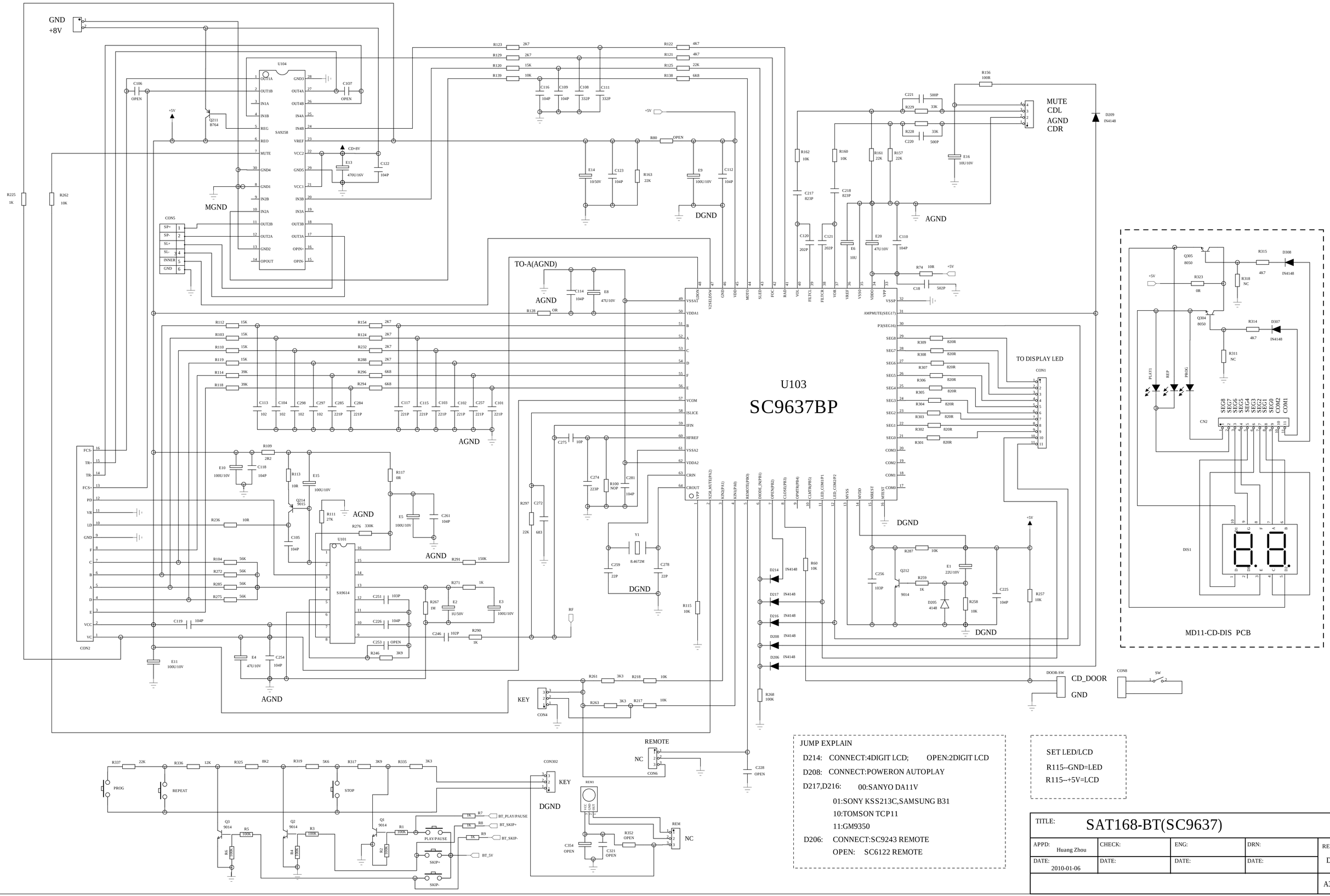

JUMP EXPLAIN

D214: CONNECT:4DIGIT LCD; OPEN:2DIGIT LCD

D208: CONNECT:POWERON AUTOPLAY

D217,D216: 00:SANYO DA11V

01:SONY KSS213C,SAMSUNG B31

10:TOMSON TCP11

11:GM9350

D206: CONNECT:SC9243 REMOTE

OPEN: SC6122 REMOTE

SET LED/LCD

R115--GND=LED

R115--+5V=LCD

TITLE: SAT168-BT(SC9637)				
APPD: Huang Zhou	CHECK:	ENG:	DRN:	REV: D
DATE: 2010-01-06	DATE:	DATE:	DATE:	
				A3

REVISION			
LTR	ECO NO.:	APPROVED:	DATE:

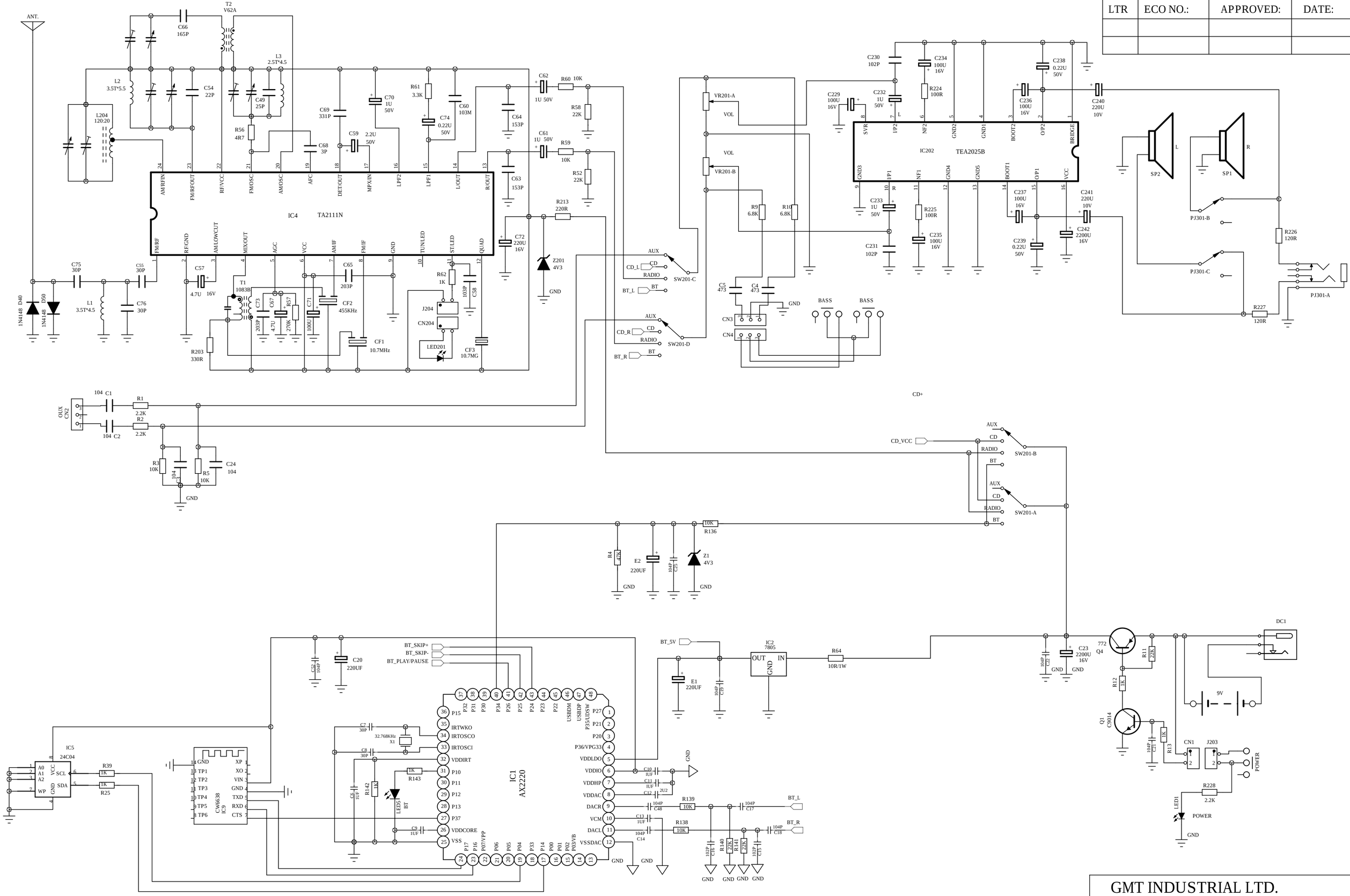

GMT INDUSTRIAL LTD.			
MODEL:	CD-168A		
DRAWN:	CHEN	DATED:	2005-12

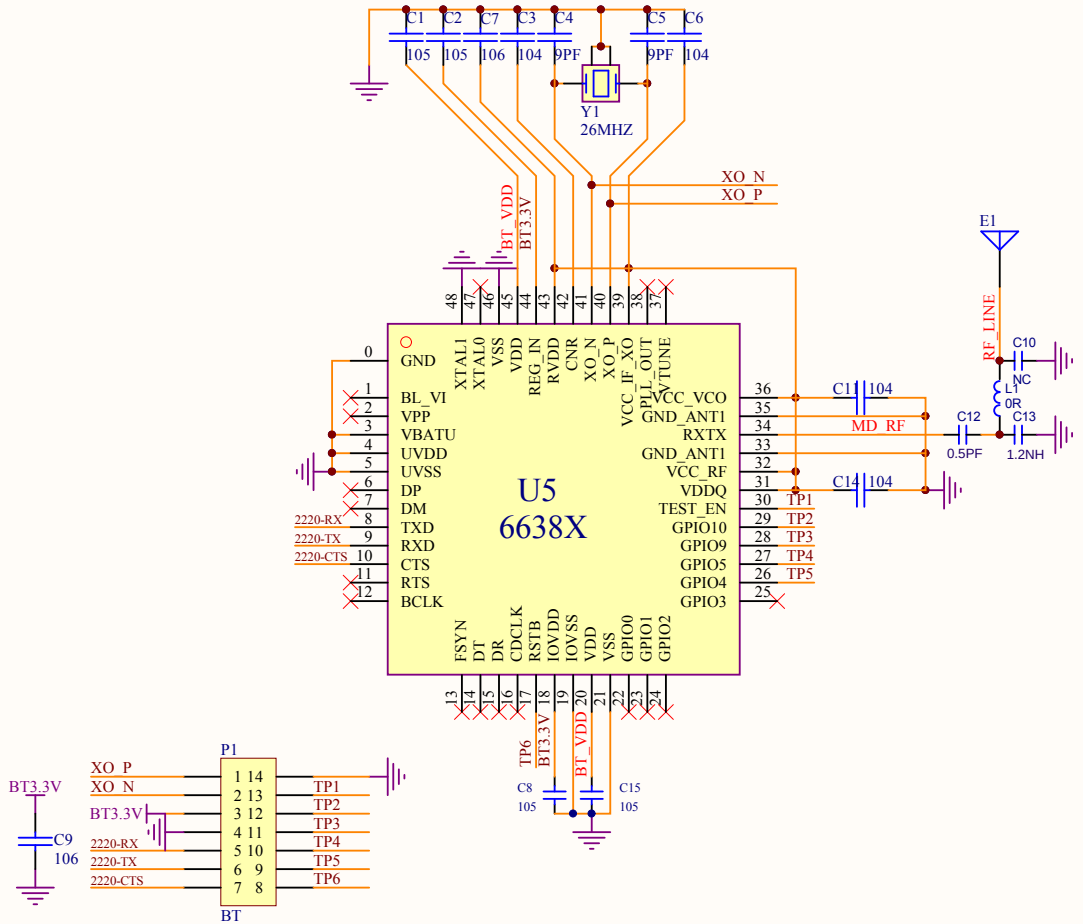

Title		
Size A4	Number	Revision
Date: 2013/1/21	Sheet of	
File: E:\BT-BOOMBOX\..\6638	Drawn By: V1.Schdoc	