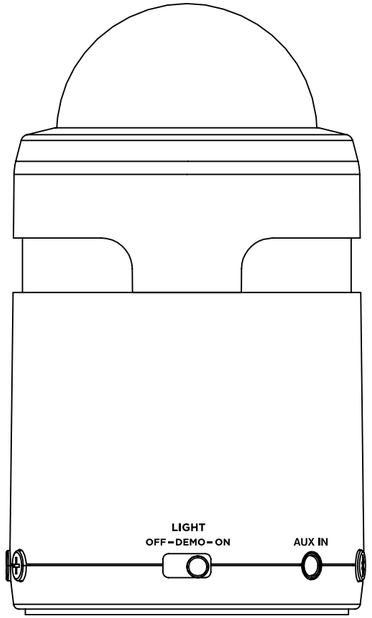

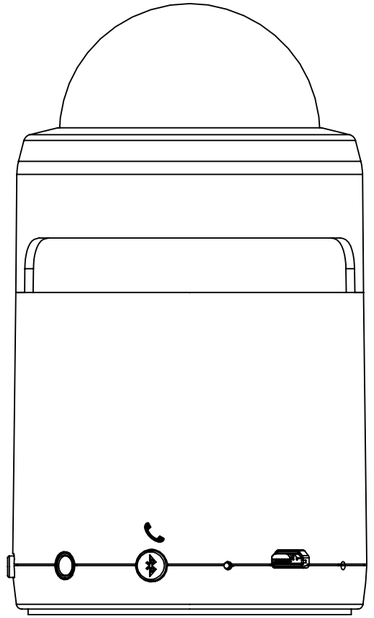

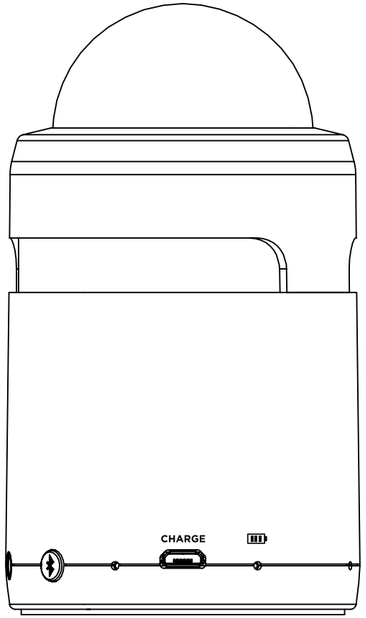

Design Development **Artwork Approval**

CONFIDENTIALITY NOTICE This document contains information/data that is confidential and the property of Numark Industries. Unless you are the intended recipient (or authorized to receive for the intended recipient), you may not read, print, retain, use, copy, distribute or disclose to anyone the message or any information contained in this document. If you have received the document in error, please advise the sender by reply e-mail, and destroy all copies of the original document.

Layer 3 -- Pantone cool gray 6C

Layer 2 -- Mechanical Dieline/Drawing - DO NOT PRINT

Layer 1 -- Reference/Info -- DO NOT PRINT

changes from last revision

PART COLOR:

code	description	revision
iSP51	Artwork	REV C
created: SPuckett	checked:	date: 12.22.2014
product name / description: Party Starter BLACK	print: --	scale: 1:1

Product Development — Artwork Release

CONFIDENTIALITY NOTICE This document contains information/data that is confidential and the property of Numark Industries. Unless you are the intended recipient (or authorized to receive for the intended recipient), you may not read, print, retain, use, copy, distribute or disclose to anyone the message or any information contained in this document. If you have received the document in error, please advise the sender by reply e-mail, and destroy all copies of the original document.