REVISION RECORD			
LTR	ECO NO:	APPROVED:	DATE:

BT MODULE

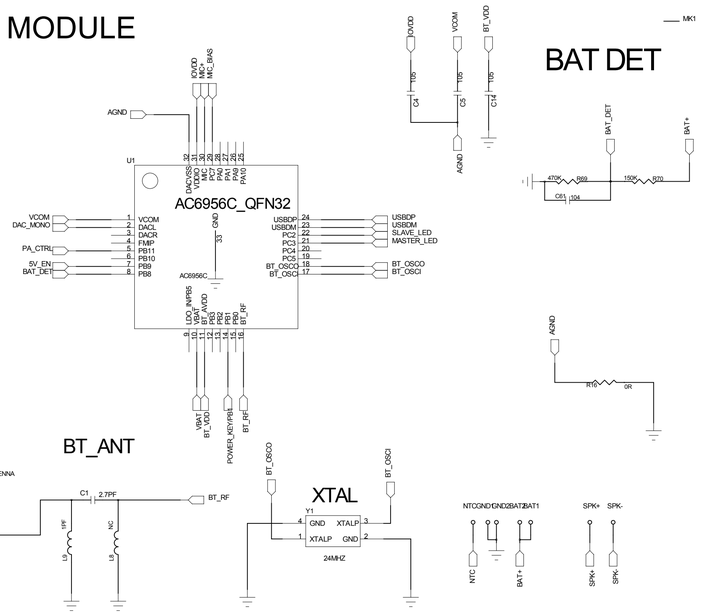

BAT DET

AUX

MICROPHONE

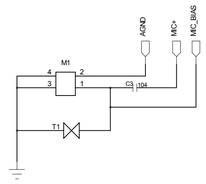

POWER SUPPLY

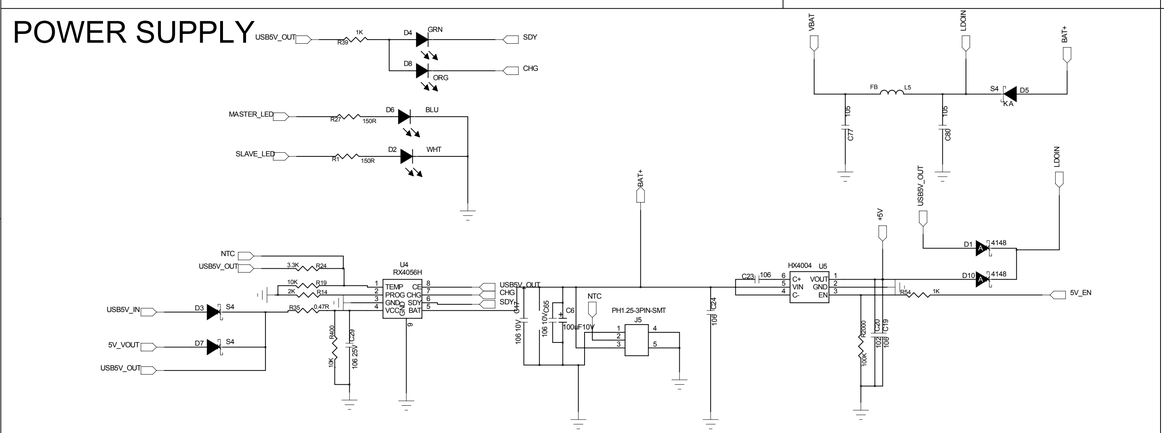

IO DUAGHTER BOARD

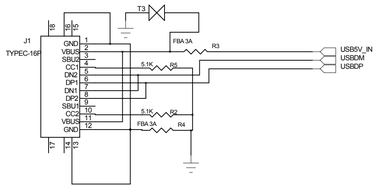

Charge Protect

AMPLIFIER

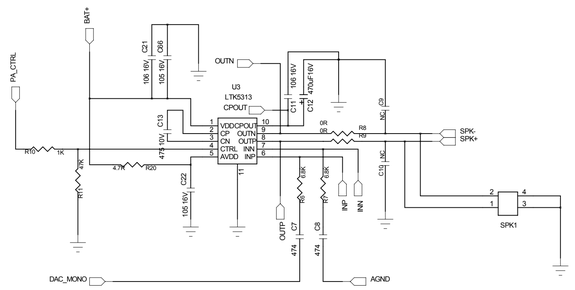

KEY&INDICATE

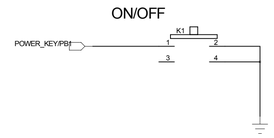

		COMPANY: MIATEK			
		TITLE: C03 S.W.V0.1			
DRAWN: Bob.yao	DATED: <Drawn Date>				
CHECKED: <Checked By>	DATED: <Checked Date>	CODE: <Code>	SIZE: A1	DRAWING NO: C03	REV: 1.2
QUALITY CONTROL: <QC By>	DATED: <QC Date>				
RELEASED: <Released By>	DATED: <Release Date>	SCALE: <Scale>		SHEET: OF 11	