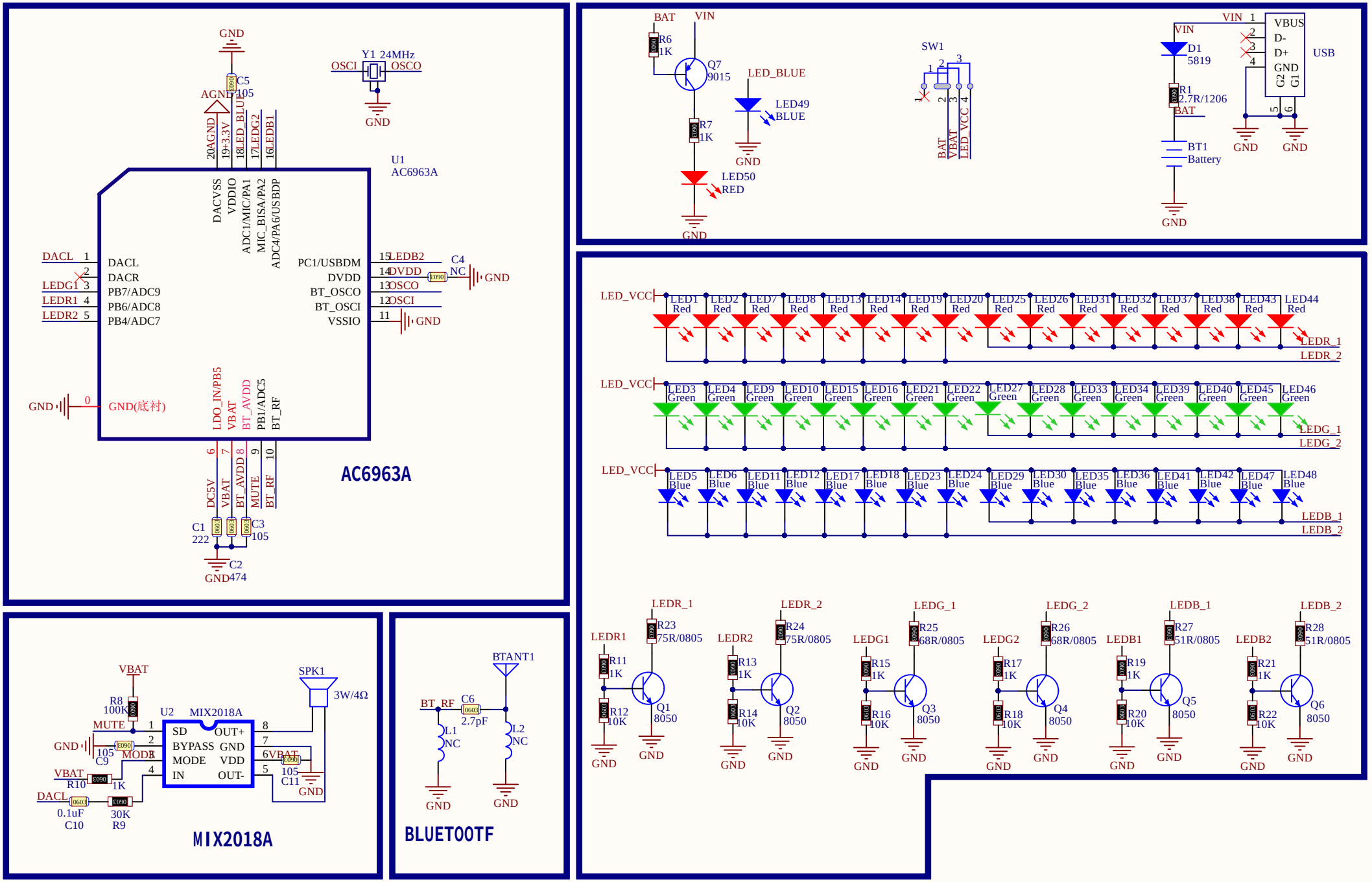
U1
AC6963A
AC6963A
GND
C5
105
AGND
Y1 24MHz
OSCI
OSCO
20AGND
19+3.3V
18LED_BLUE
17LEDG2
16LEDB1
DACVSS
VDDIO
ADC1/MIC/PA1
MIC_BISA/PA2
ADC4/PA6/USBDP
DACL 1
DACL
2
DACR
LEDG1 3
PB7/ADC9
LEDR1 4
PB6/ADC8
LEDR2 5
PB4/ADC7
PC1/USBDM
15LEDB2
DVDD
14DVDD
BT_OSCO
13OSCO
BT_OSCI
12OSCI
VSSIO
11
C4
NC
GND
GND 0
GND(底衬)
LDO_IN/PB5
VBAT
BT_AVDD
PB1/ADC5
BT_RF
6
7
8
9
10
DC5V
VBAT
BT_AVDD
MUTE
BT_RF
C1
222
C3
105
C2
474
BAT
VIN
R6
1K
Q7
9015
LED_BLUE
LED49
BLUE
R7
1K
LED50
RED
SW1
BAT
VBAT
LED_VCC
VIN
D1
5819
R1
2.7R/1206
BAT
BT1
Battery
VIN 1
VBUS
D-
D+
GND
G2
G1
USB
LED_VCC
LED1 Red
LED2 Red
LED7 Red
LED8 Red
LED13 Red
LED14 Red
LED19 Red
LED20 Red
LED25 Red
LED26 Red
LED31 Red
LED32 Red
LED37 Red
LED38 Red
LED43 Red
LED44 Red
LEDR_1
LEDR_2
LED3 Green
LED4 Green
LED9 Green
LED10 Green
LED15 Green
LED16 Green
LED21 Green
LED22 Green
LED27 Green
LED28 Green
LED33 Green
LED34 Green
LED39 Green
LED40 Green
LED45 Green
LED46 Green
LEDG_1
LEDG_2
LED5 Blue
LED6 Blue
LED11 Blue
LED12 Blue
LED17 Blue
LED18 Blue
LED23 Blue
LED24 Blue
LED29 Blue
LED30 Blue
LED35 Blue
LED36 Blue
LED41 Blue
LED42 Blue
LED47 Blue
LED48 Blue
LEDB_1
LEDB_2
LEDR1
R11
1K
R12
10K
LEDR_1
R23
75R/0805
Q1
8050
LEDR2
R13
1K
R14
10K
LEDR_2
R24
75R/0805
Q2
8050
LEDG1
R15
1K
R16
10K
LEDG_1
R25
68R/0805
Q3
8050
LEDG2
R17
1K
R18
10K
LEDG_2
R26
68R/0805
Q4
8050
LEDB1
R19
1K
R20
10K
LEDB_1
R27
51R/0805
Q5
8050
LEDB2
R21
1K
R22
10K
LEDB_2
R28
51R/0805
Q6
8050
VBAT
R8
100K
MUTE
GND
105
C9
VBAT
R10
1K
DACL
0.1uF
C10
30K
R9
U2
MIX2018A
SD
BYPASS
MODE
IN
OUT+
GND
VDD
OUT-
6VBAT
105
C11
SPK1
3W/4Ω
MIX2018A
BTANT1
BT_RF
C6
0603
2.7pF
L1
NC
L2
NC
BLUETOOTF