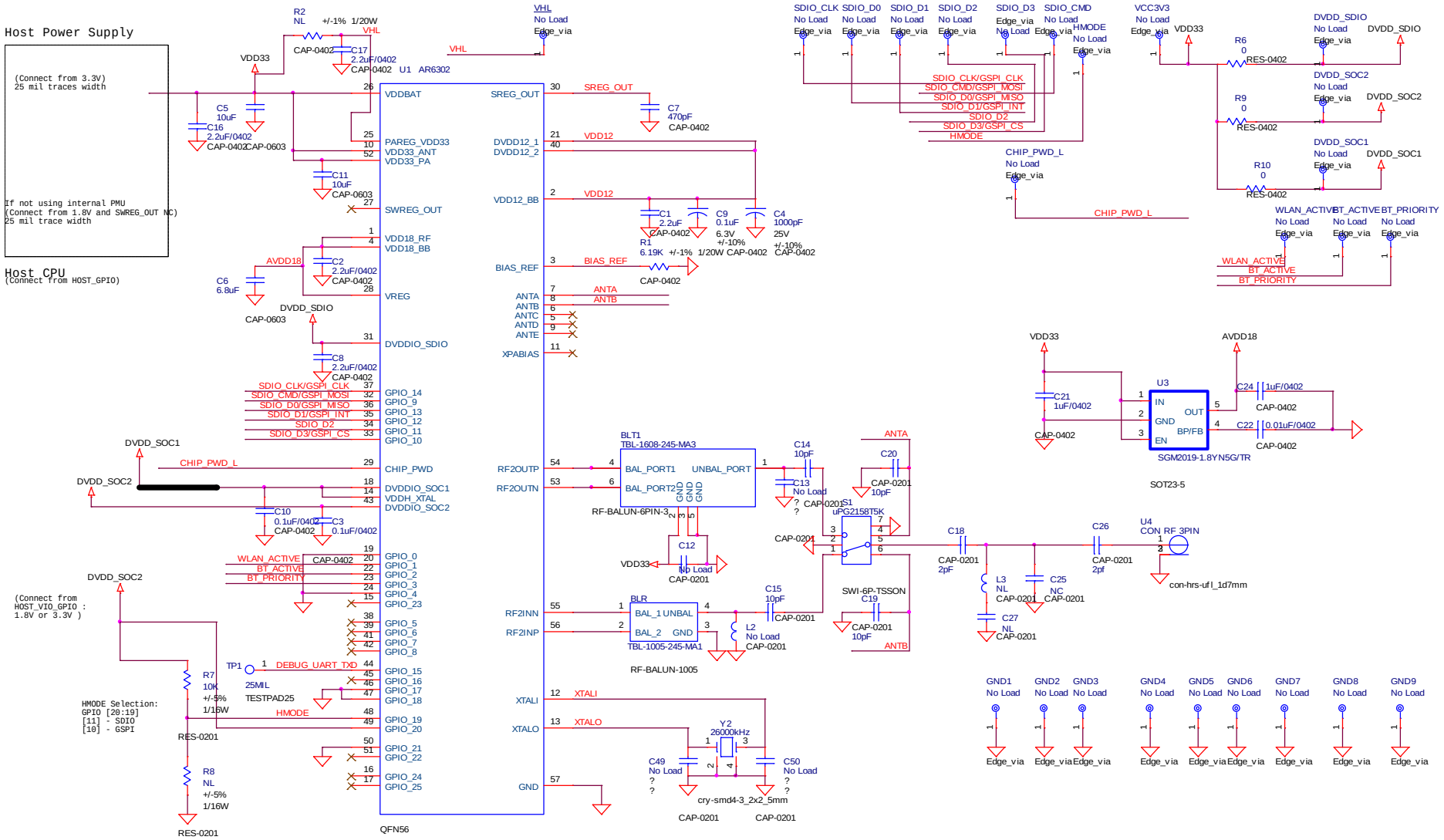
Host Power Supply
(Connect from 3.3V)
25 mil traces width
If not using internal PMU
(Connect from 1.8V and SWREG_OUT NC)
25 mil trace width
Host CPU
(Connect from HOST_GPIO)
U1 AR6302
QFN56
VDDBAT
PAREG_VDD33
VDD33_ANT
VDD33_PA
SWREG_OUT
VDD18_RF
VDD18_BB
VREG
DVDDIO_SDIO
CHIP_PWD
DVDDIO_SOC1
VDDH_XTAL
DVDDIO_SOC2
SREG_OUT
DVDD12_1
DVDD12_2
VDD12_BB
BIAS_REF
ANTA
ANTB
ANTC
ANTD
ANTE
XPABIAS
RF2OUTP
RF2OUTN
RF2INN
RF2INP
XTALI
XTALO
GND
SDIO_CLK/GSPI_CLK
SDIO_CMD/GSPI_MOSI
SDIO_D0/GSPI_MISO
SDIO_D1/GSPI_INT
SDIO_D2
SDIO_D3/GSPI_CS
WLAN_ACTIVE
BT_ACTIVE
BT_PRIORITY
DEBUG_UART_TXD
HMODE
CHIP_PWD_L
BLT1
TBL-1608-245-MA3
RF-BALUN-6PIN-3
BLR
TBL-1005-245-MA1
RF-BALUN-1005
S1
uPG2158T5K
SWI-6P-TSSON
U3
SGM2019-1.8YN5G/TR
SOT23-5
U4
CON_RF_3PIN
con-hrs-ufl_1d7mm
Y2
26000kHz
cry-smd4-3_2x2_5mm
TP1
TESTPAD25
HMODE Selection:
GPIO [20:19]
[11] - SDIO
[10] - GSPI
(Connect from
HOST_VIO_GPIO :
1.8V or 3.3V)
VHL
VDD33
VDD12
AVDD18
DVDD_SDIO
DVDD_SOC1
DVDD_SOC2
VCC3V3
GND1
GND2
GND3
GND4
GND5
GND6
GND7
GND8
GND9