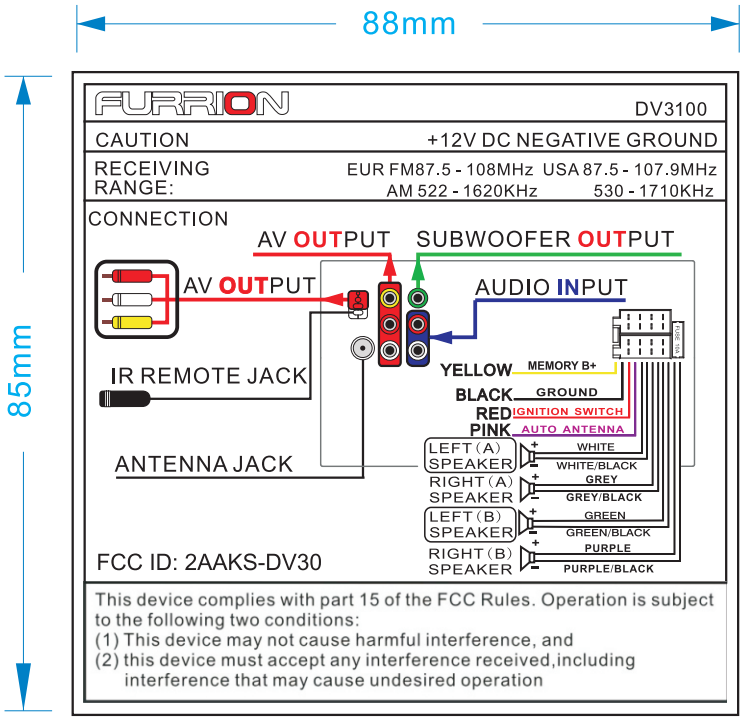
88mm
85mm
FURRION
DV3100
CAUTION
+12V DC NEGATIVE GROUND
RECEIVING RANGE:
EUR FM87.5 - 108MHz USA 87.5 - 107.9MHz
AM 522 - 1620KHz 530 - 1710KHz
CONNECTION
AV OUTPUT
SUBWOOFER OUTPUT
AV OUTPUT
AUDIO INPUT
IR REMOTE JACK
ANTENNA JACK
YELLOW MEMORY B+
BLACK GROUND
RED IGNITION SWITCH
PINK AUTO ANTENNA
LEFT (A) SPEAKER
WHITE
WHITE/BLACK
RIGHT (A) SPEAKER
GREY
GREY/BLACK
LEFT (B) SPEAKER
GREEN
GREEN/BLACK
RIGHT (B) SPEAKER
PURPLE
PURPLE/BLACK
FCC ID: 2AAKS-DV30
This device complies with part 15 of the FCC Rules. Operation is subject to the following two conditions:
(1) This device may not cause harmful interference, and
(2) this device must accept any interference received,including interference that may cause undesired operation