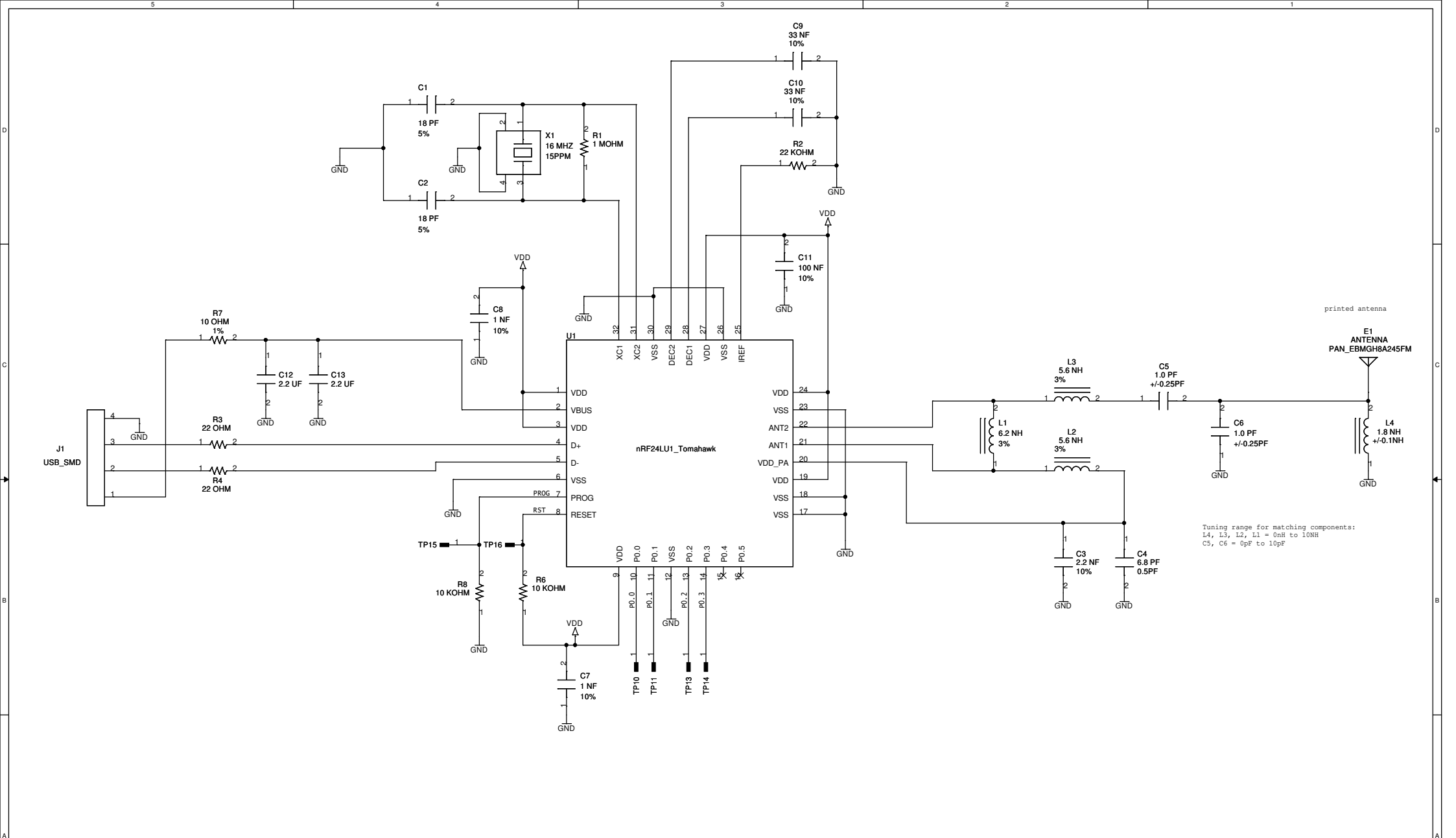
C1
18 PF
5%
C2
18 PF
5%
X1
16 MHZ
15PPM
R1
1 MOHM
C9
33 NF
10%
C10
33 NF
10%
R2
22 KOHM
C11
100 NF
10%
C8
1 NF
10%
R7
10 OHM
1%
C12
2.2 UF
C13
2.2 UF
J1
USB_SMD
R3
22 OHM
R4
22 OHM
U1
nRF24LU1_Tomahawk
XC1
XC2
VSS
DEC2
DEC1
VDD
VSS
IREF
VDD
VBUS
VDD
D+
D-
VSS
PROG
RESET
VDD
VSS
ANT2
ANT1
VDD_PA
VDD
VSS
VSS
VDD
P0.0
P0.1
VSS
P0.2
P0.3
P0.4
P0.5
PROG
RST
TP15
TP16
R8
10 KOHM
R6
10 KOHM
C7
1 NF
10%
TP10
TP11
TP13
TP14
L3
5.6 NH
3%
L2
5.6 NH
3%
L1
6.2 NH
3%
C5
1.0 PF
+/-0.25PF
C6
1.0 PF
+/-0.25PF
L4
1.8 NH
+/-0.1NH
C3
2.2 NF
10%
C4
6.8 PF
0.5PF
printed antenna
E1
ANTENNA
PAN_EBMGH8A245FM
Tuning range for matching components:
L4, L3, L2, L1 = 0nH to 10NH
C5, C6 = 0pF to 10pF
GND
VDD