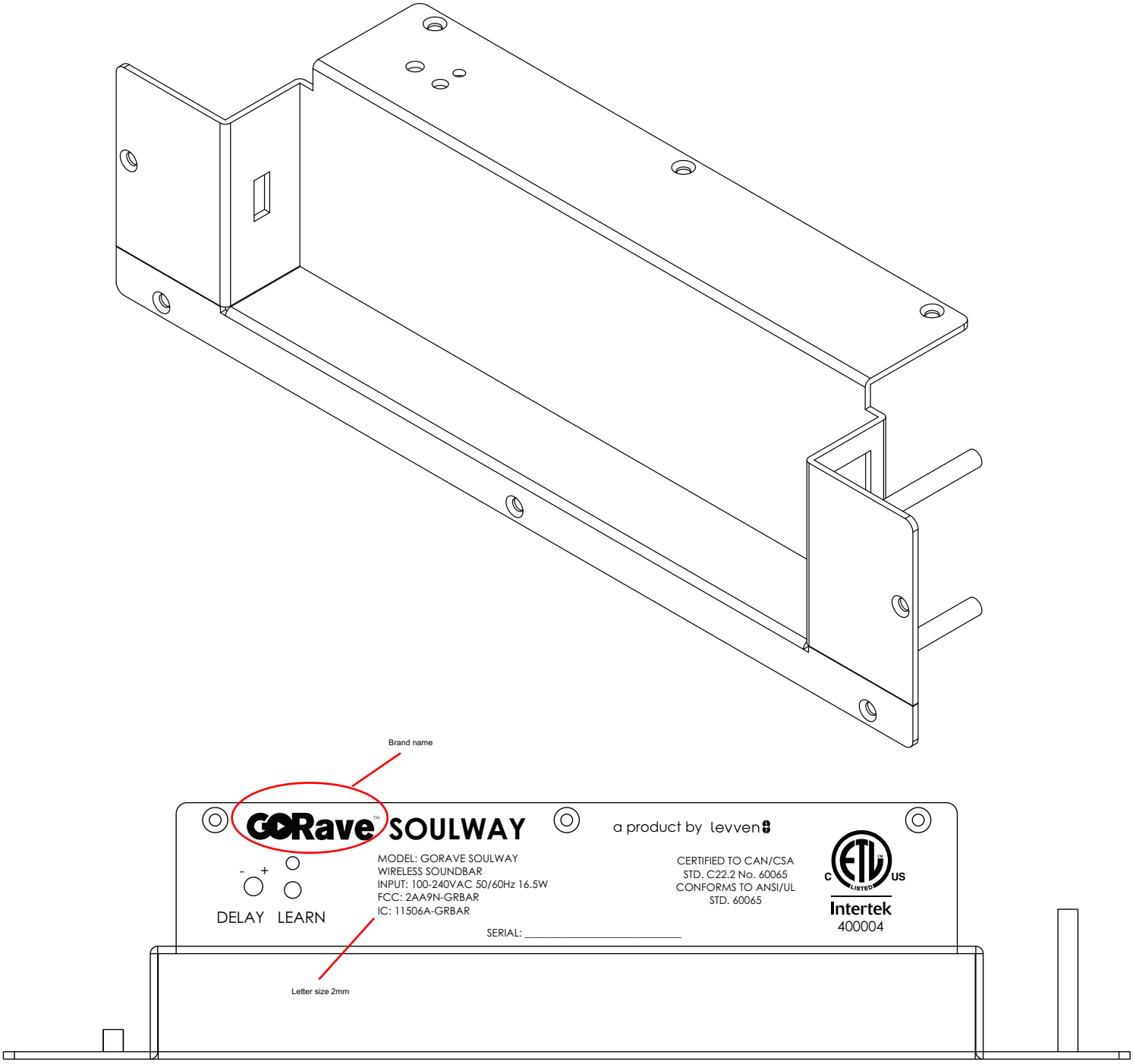
Brand name
GoRave SOULWAY
a product by levven
- +
DELAY LEARN
MODEL: GORAVE SOULWAY
WIRELESS SOUNDBAR
INPUT: 100-240VAC 50/60Hz 16.5W
FCC: 2AA9N-GRBAR
IC: 11506A-GRBAR
SERIAL: _____
CERTIFIED TO CAN/CSA
STD. C22.2 No. 60065
CONFORMS TO ANSI/UL
STD. 60065
C LISTED US
Intertek
400004
Letter size 2mm
CAUTION
RISK OF ELECTRIC SHOCK
DO NOT OPEN
AVIS
RISQUE DE CHOC ÉLECTRIQUE
NE PAS OUVRIR
RoHS
DOUBLE INSULATION
When servicing only
use identical parts
TO PREVENT FIRE OR SHOCK HAZARD, DO NOT EXPOSE
THIS APPLIANCE TO RAIN OR MOISTURE.
AFIN DE PREVENIR TOUT INCENDIE ET ELECTROCUTION,
N'EXPOSEZ PAS CETTE UNITE A LA PLUIE ET L'HUMIDITE.
USB
PORT
ON
OFF
AC IN
This Class B digital apparatus complies with Canadian ICES-003.
Cet appareil numérique de la classe B est conforme à la norme NMB-003 du Canada
Letter size 1.8mm
This device complies with Part 15 of the FCC Rules.
Operation is subject to the following two conditions:
(1) this device may not cause harmful interference, and
(2) this device must accept any interference received, including interference that may cause undesired operation.

~AC IN
OFF
ON
Label location
Upgrade Port