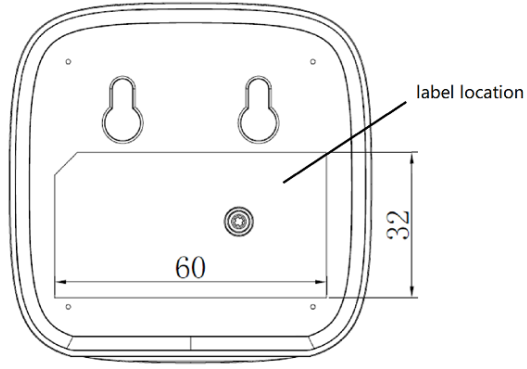

The label is printed to the back of the device with ink.