LUBA Robotic Lawn Mower

Model: AWD 5000, LUBA0001, AWD 3000

Quick Start Guide

V 1.0

Thank you for choosing MAMMOTION as your garden care kit. This Quick Start Guide will help you learn and operate MAMMOTION LUBA.

Safety and Regulations

Operating MAMMOTION products requests training and practice. Please read through this document before operating it in your garden. They are：

Do NOT charge the LUBA by third-party charger

Do NOT flip over the mower when running

Do NOT put foot/hand under mower when running

Do NOT push/pull the mower when running

Do NOT disassemble any part when powered on

Do NOT use hands to touch or replace the running blades

Do NOT use hands to touch the charging ports

Do NOT run mower in the puddle

Do NOT run mower on ground with sticks or rubbles

Clean the lawn before deploying the mower for work

Keep the charging port clean and dry

Introduction

About MAMMOTION LUBA

MAMMOTION LUBA is a 4-wheels-differential (4WD) perimeter wire free robotic lawn mower. The 4WD and perimeter wire free enable LUBA to break the limits of mowing jobs and free the user's hands.

LUBA Robotic Mower

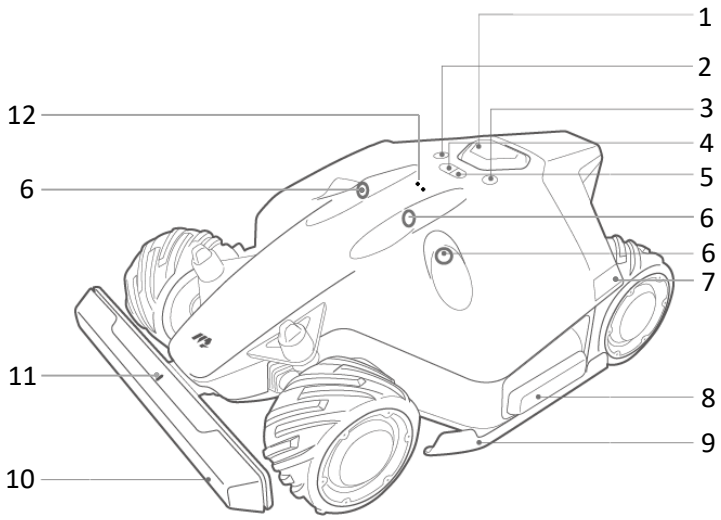

1. E-stop
2. Start button
3. Power button
4. Auto-return button
5. Cutting button
6. Ultrasonic sensor
7. Left light
8. Side collision sensor
9. Protecting bracket
10. Front bumper
11. Connecting indicator
12. Rain sensor

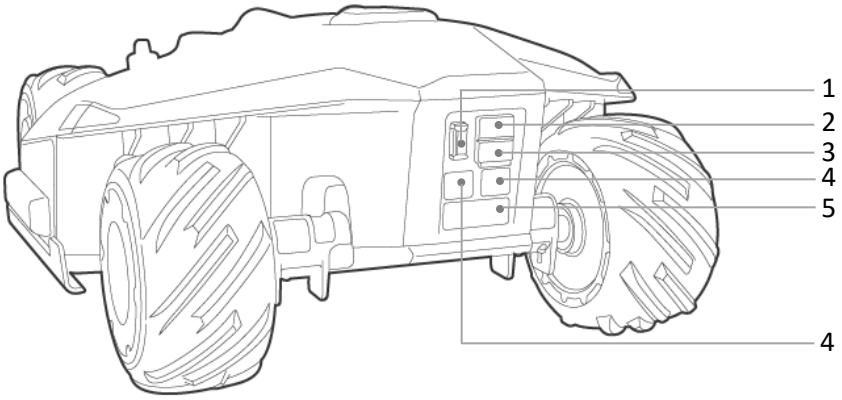

1. Secure key
2. SIM port（Reserved[*1]）
3. USB port
4. Charging port
5. Infrared sensor

Note:

1. The reserved port might not function in some previous version mowers.

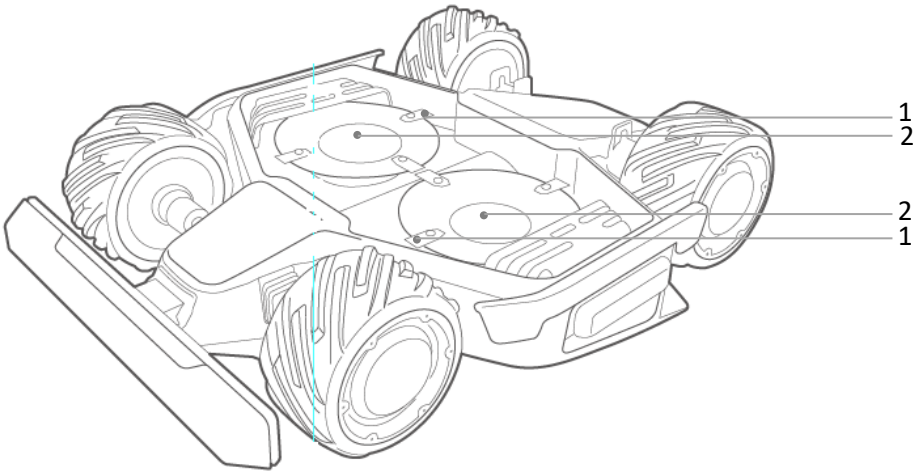

1. Cutting blade*8
2. Blade disk*2

Charging Station

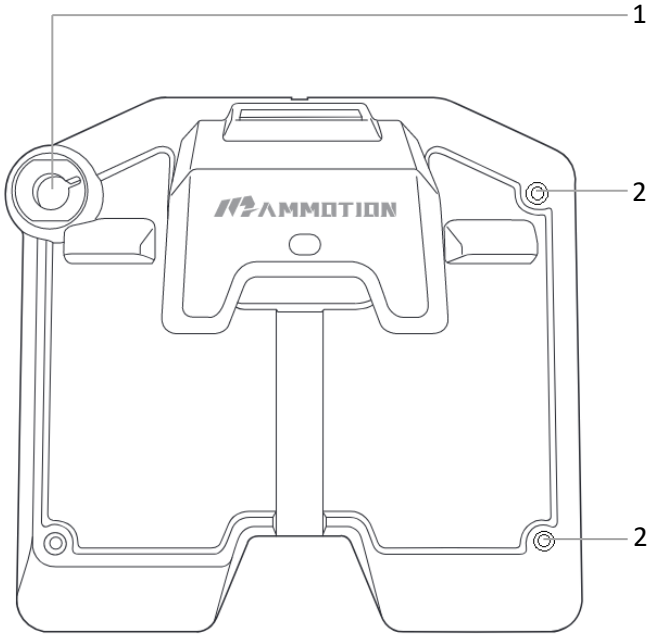

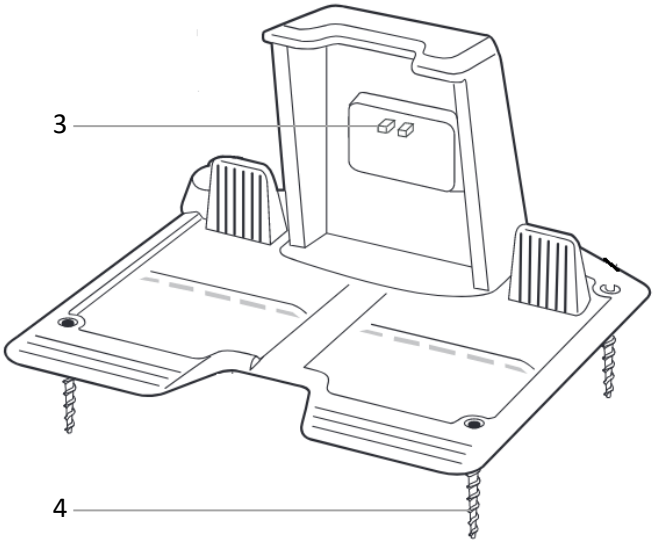

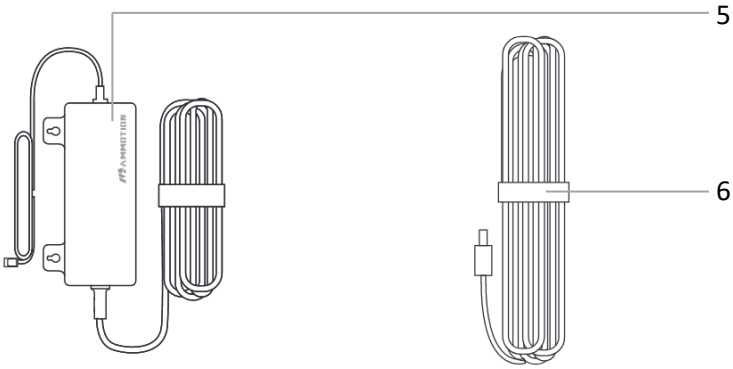

1. Mounting hole for RTK base pole
2. Mounting holes*3
3. Charging ports for LUBA
4. Screws*3
5. Power adaptor
6. Extension wire（10meters）

RTK base

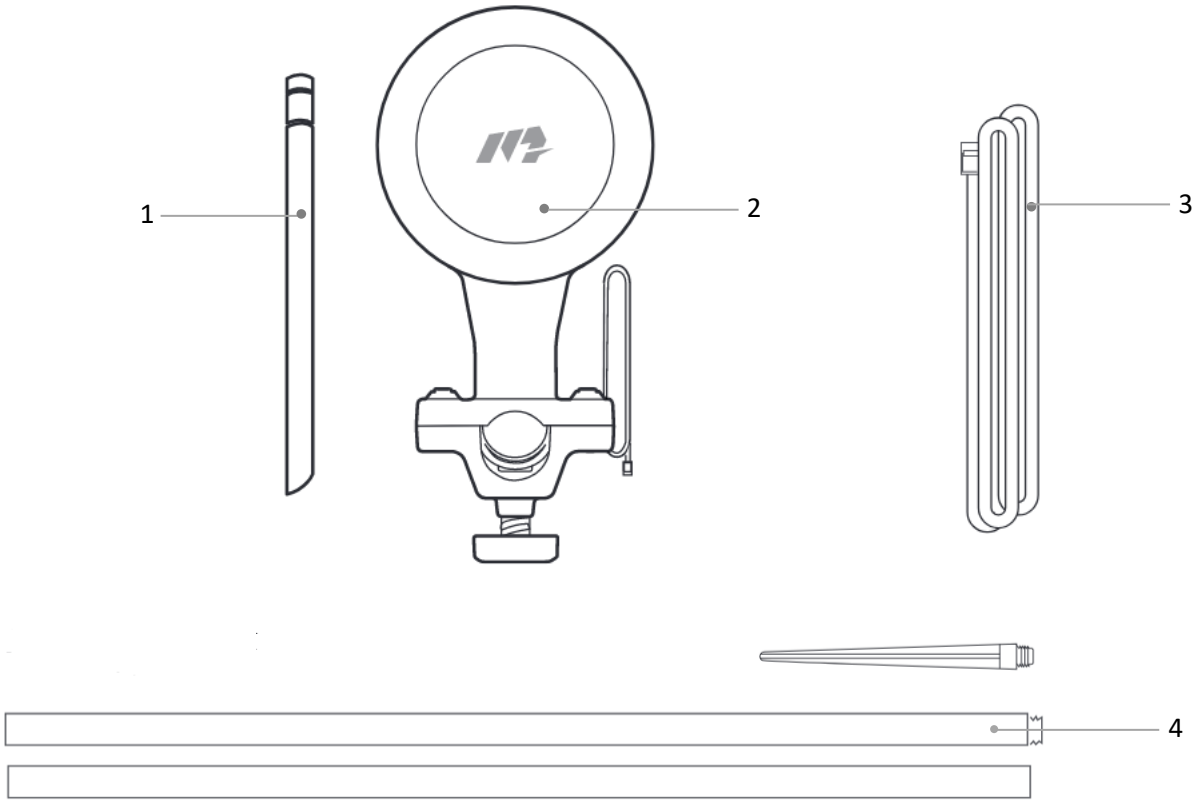

1. Antenna
2. RTK base
3. RTK wire（2.5meter）
4. Mounting pole

Preparation & Activation

a. Install the front bumper and blade plates on LUBA

The front bumper can be inserted and locked to the front of LUBA body directly.

As shown in the following figures：

（图）

The blade disks are tightened up

（图）

b. Install MAMMOTION APP

1. APP download & Installations

Option1. Search the MAMMOTION on App Store (For iOS).

Option2. Go to below download link for the MAMMOTION App (For Android).

Link：*https://www.pgyer.com/5WVG*

2. LUBA registration and activation

Keep pressing the POWER BUTTON on the LUBA until you hear “Di...” sound from it. Then the LUBA is on already.

Open the App for binding and activating the LUBA.

Step 1: Sign up on the App for the first use

Turn on the GPS and Bluetooth on your phone. Select the country and input your email address.

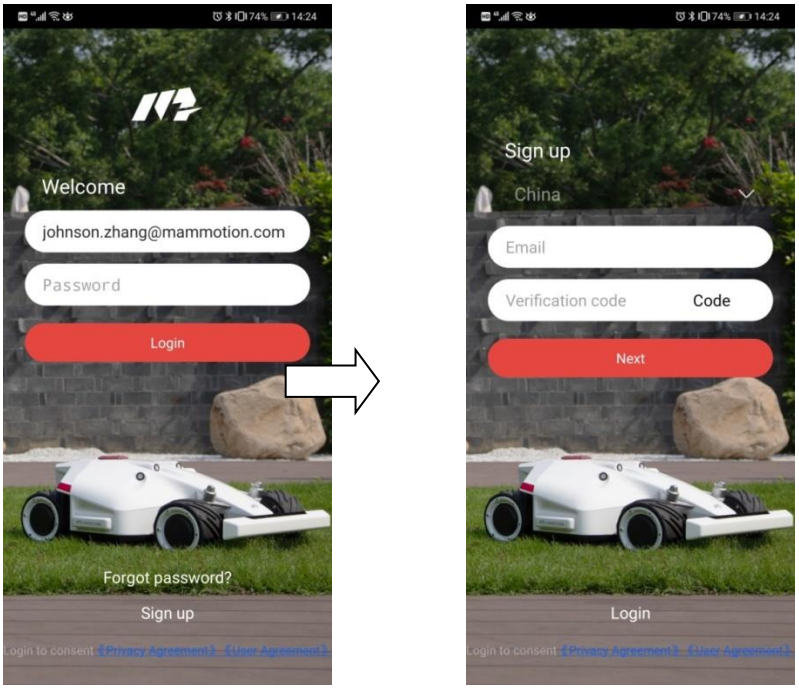

Then, click **Code** on the App. It will send a verifying code to your email. Input the six figures verifying code to the App and click **Next** to complete the signup.

It will need users to setup their own password for the account.

Step2: Add your LUBA

After you select the correct Bluetooth ID of your LUBA, it will need to connect it to Wi-Fi for activation.

The App will search the available WiFi signal nearby. Then select your own WiFi, enter the password and then click **Next**. Wait until the App shows **Device added successfully**. Then click to finish.

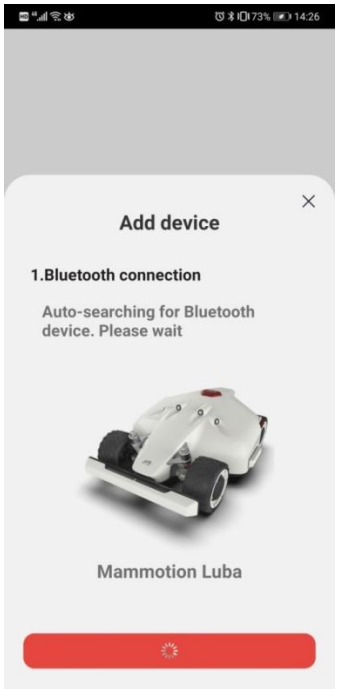
Add device
1.Bluetooth connection
Auto-searching for Bluetooth device. Please wait
Mammotion Luba

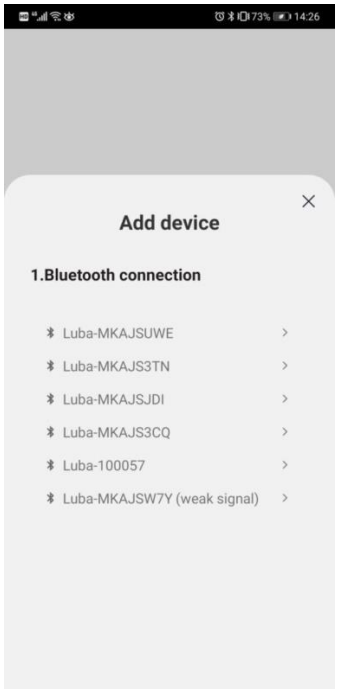
Add device
1.Bluetooth connection
Luba-MKAJSUWE
Luba-MKAJS3TN
Luba-MKAJSJDI
Luba-MKAJS3CQ
Luba-100057
Luba-MKAJSW7Y (weak signal)

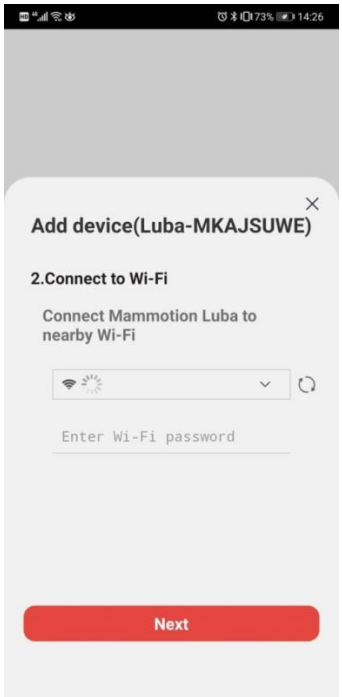
Add device(Luba-MKAJSUWE)
2.Connect to Wi-Fi
Connect Mammotion Luba to nearby Wi-Fi
Enter Wi-Fi password
Next

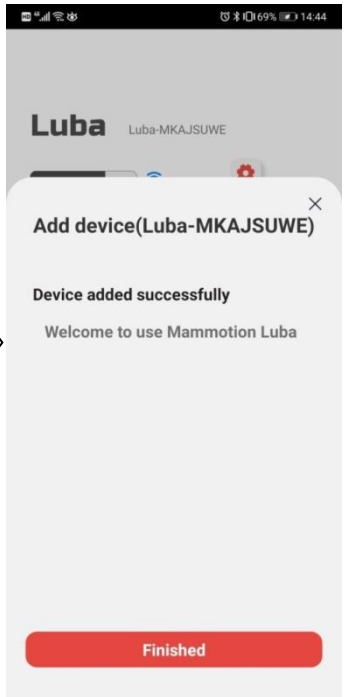
Luba
Luba-MKAJSUWE
Add device(Luba-MKAJSUWE)
Device added successfully
Welcome to use Mammotion Luba
Finished

App introduction

As shown in the following figure, the meanings of each icon are listed below：

1：**Cutting height setting**. When user changes the value of it, the lift motor will drive the blade to the corresponding height.

2：**Positioning/navigation status**. There are two statuses. One is GPS and the other is RTK. In normal work, the status should be in RTK status.

3：**Bluetooth connecting status**. If the Bluetooth was connected successfully, it will light up to be blue.

4：**Mower battery power left**.

5：**LUBA SSID**. The current LUBA added to the App.

6：**LUBA status**. There are five status: Initializing, Charging, Standby, Task planning, Working and Task suspended.

7：**Error logs**. It’s used for troubleshooting.

8：**Map display in the central**.

9：**Manually drive forward/backward**.

10：**Create task**. Click here to create a new map with mowing task.

11：**Setting**. Display setting, docking and recharging, user prompts and RTK base reset.

12：**Manually drive steering left/right**.

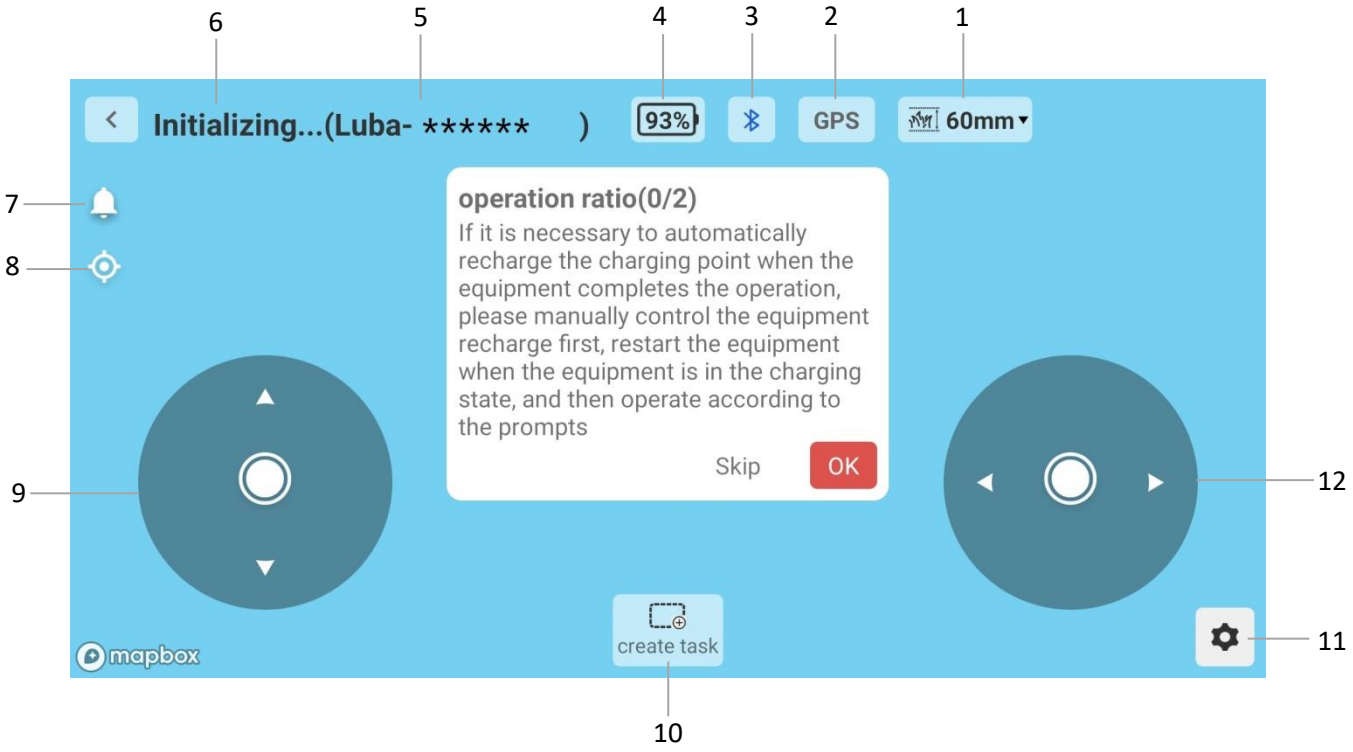

RTK Base Installation

Recommendation of selecting the RTK base point for typical installation:

1. Install the RTK base on the ground
   This way is for the property with relatively opened areas of the yard.
   For example, there are no tall buildings around the yard except the owner's house or the buildings are far away from it. In such a case, please select the location of RTK base by following the below recommendations：

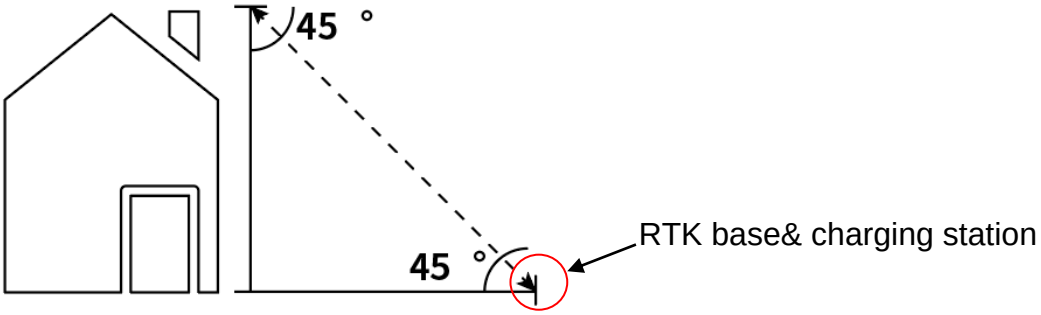

Height of the building or obstacle	Distance between the RTK base and the building or obstacle
1m	>1m
2m	>2m
3m	>3m
4m	>4m

a. RTK base is installed on the charging station

Over view of the installation when it's completed：

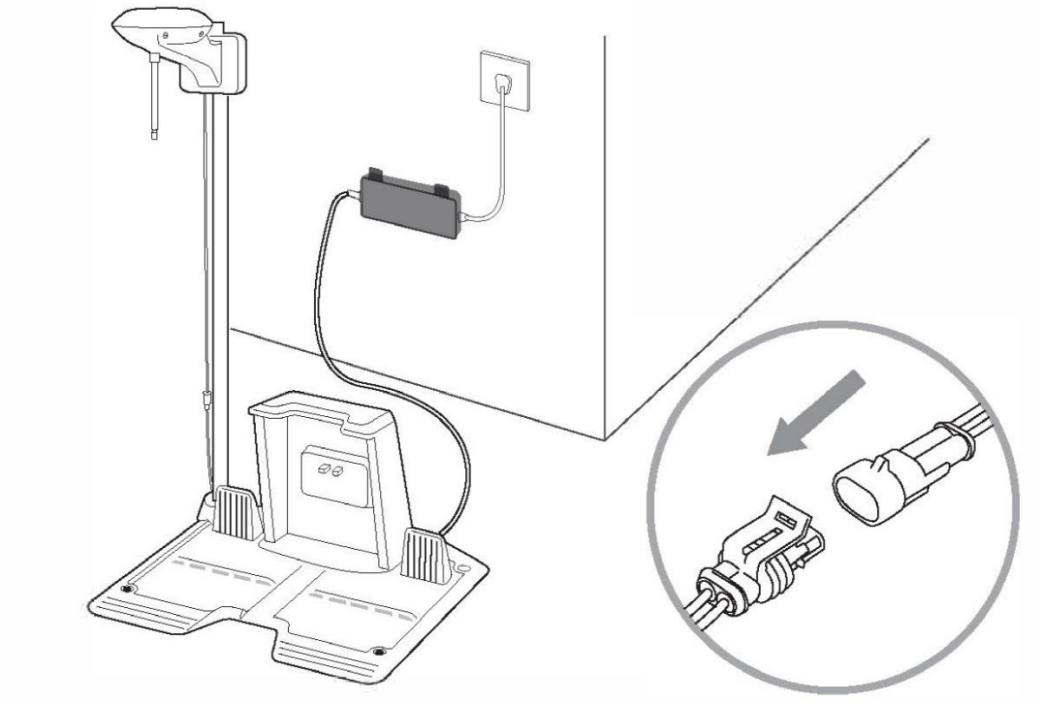

Installation Kit：

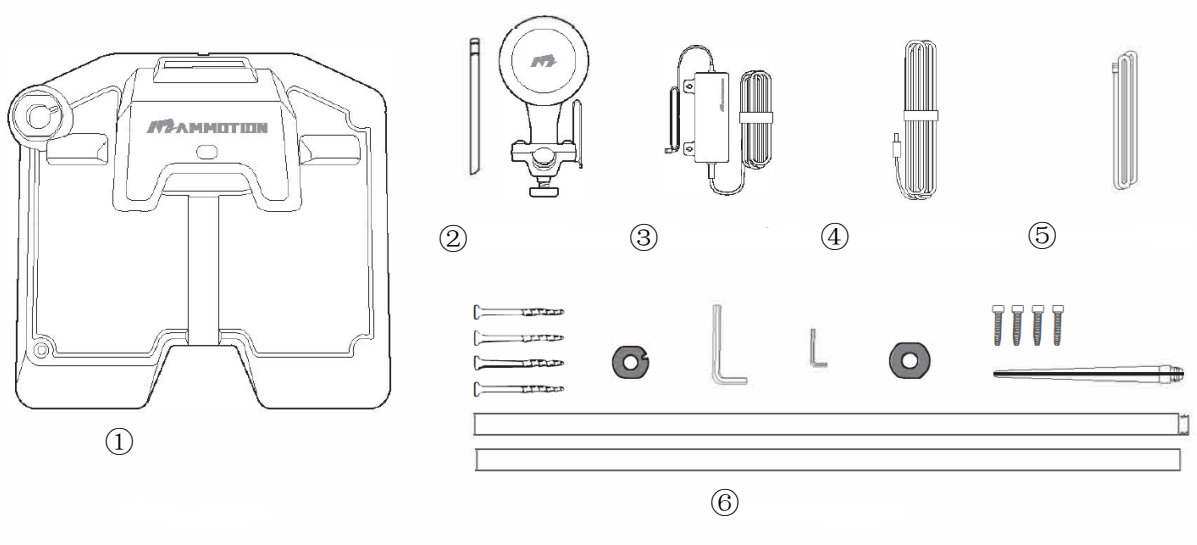

① Charging station
② RTK base
③ Power adaptor for charging station
④ Extension wire for charging station（10 meters）
⑤ RTK wire（2.5 meters）
⑥ RTK base mounting pole with tools

Step1： Go through the 2.5meters RTK wire from **A** to **B** and then connect it to **C**.

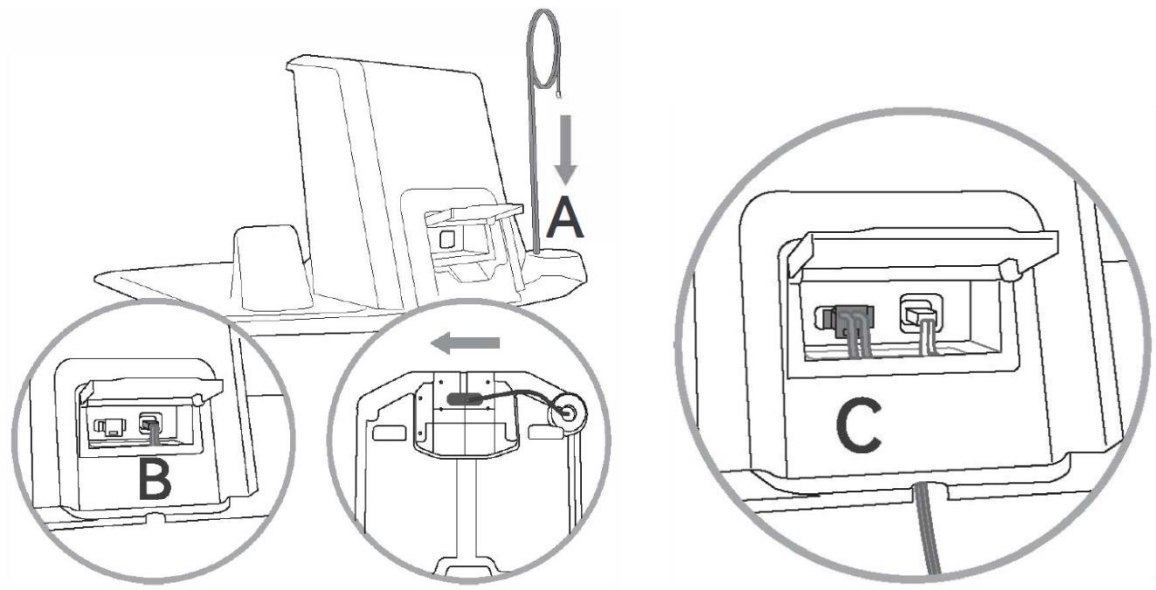

Step2： Insert and fix the RTK bas mounting pole to the ground from hole **A** on charging station.

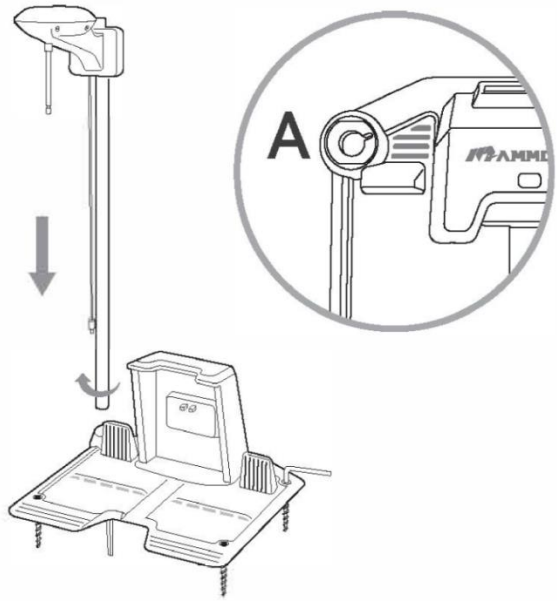

Step3： Screw the other part of RTK base mounting pole together. Fix the RTK base to the mounting pole. The RTK base can be locked on the pole by driving the plastic screw on the back. Users can fix the RTK base on the pole first before fixing the pole to the ground as well.

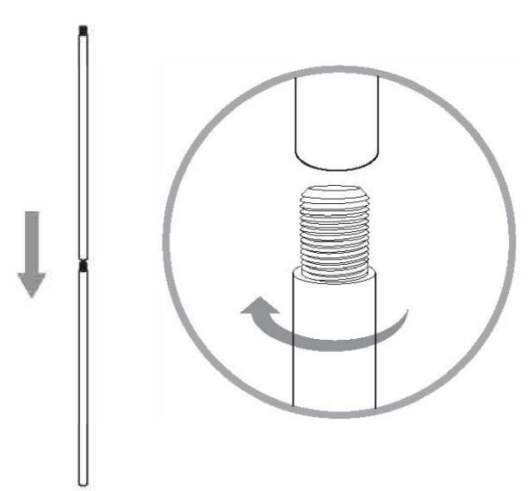

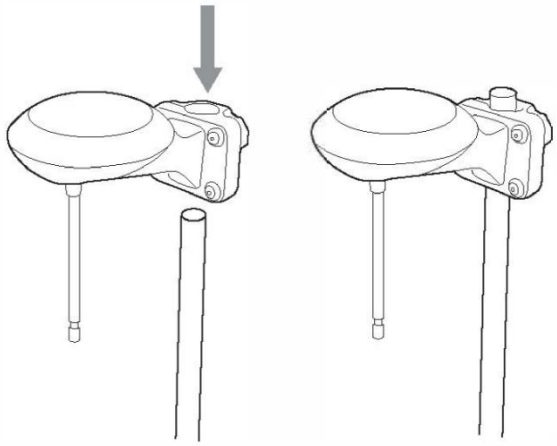

Step5: Then connect the wires for each part. Done!

Setup mowing task

Step1：RESET RTK antenna

When the LUBA is in charging state, go to **Setting**--->**RTK Antenna Reset**. Reset the RTK antenna. Then the LUBA will recognize the current point of the charging station. This step is very important for the success of automatic recharge.

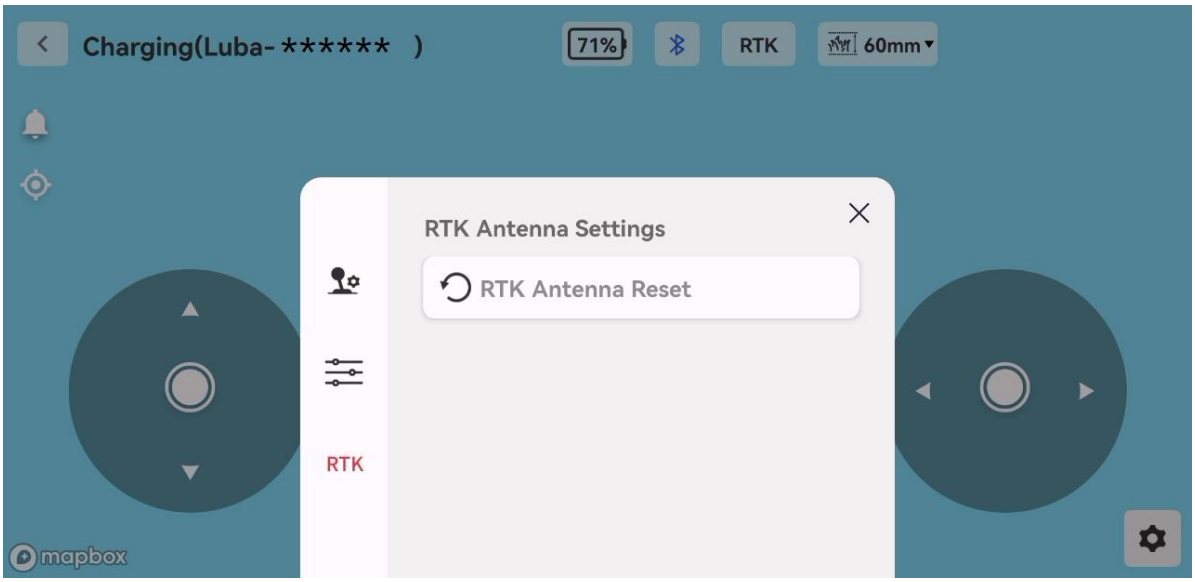

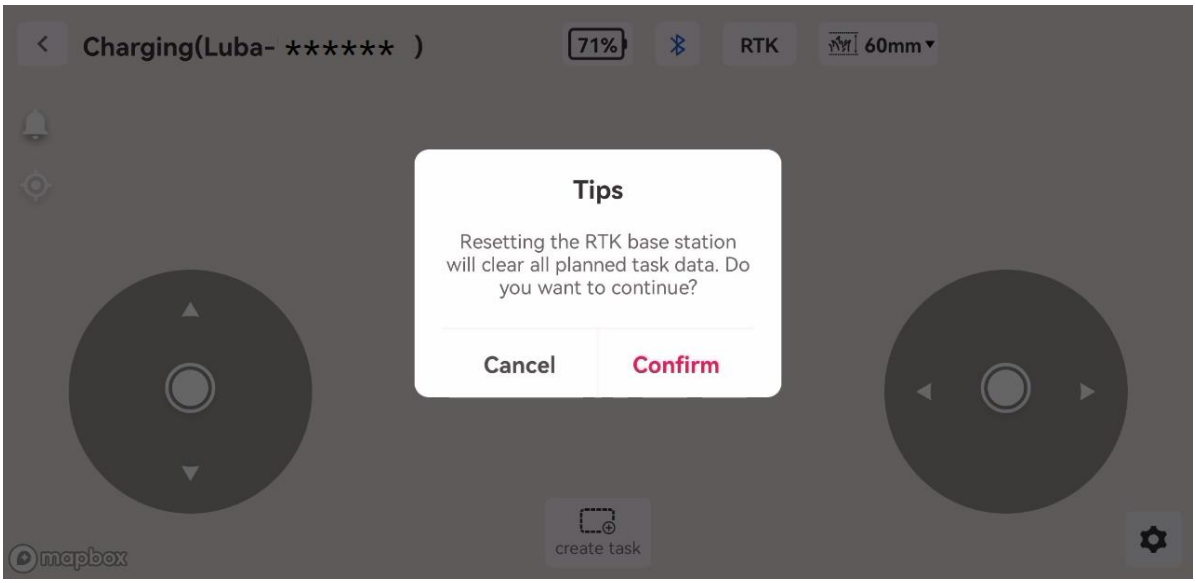

Note：

1. The LUBA status must be **on Charging** when clicking to reset the RTK antenna.
2. The RTK antenna reset will clear all the previous planed data. So it's only done for a new place of charging station or setting.

Step2：Draw map

After the RTK antenna is reset, drive the LUBA out from the charging station for about 1meter away. The LUBA will turn to Standby status.
Then click Create task. Give it a name and confirm to start drawing the map. Then drive the mower around the boundary of your lawn area to build up the virtual boundary.

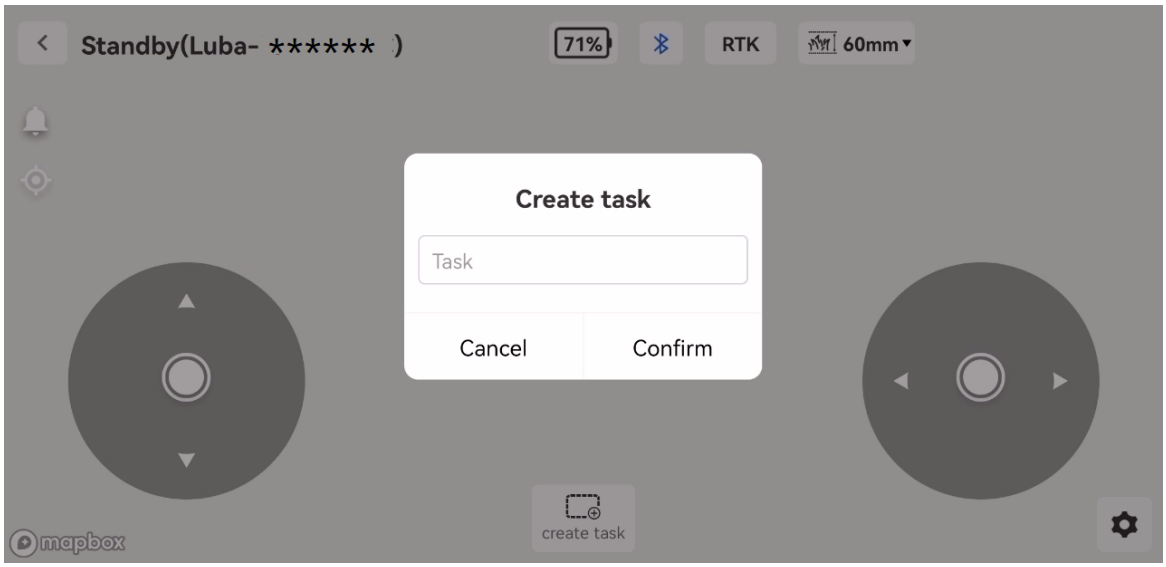

When the map is started to draw, the LUBA status will turn to Task planning. Then drive the LUBA to complete boundary drawing.

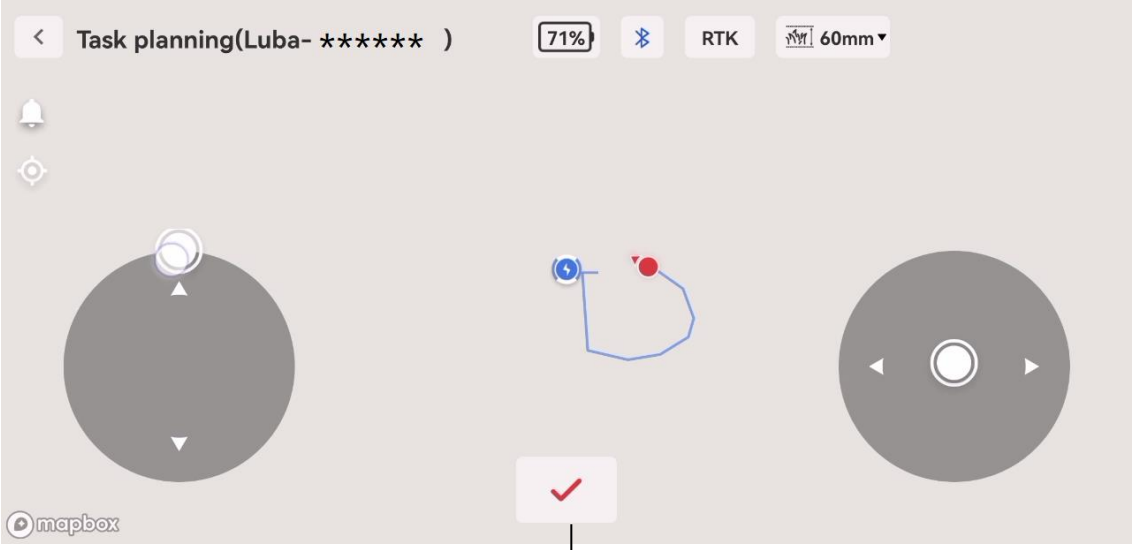

Manually complete the boundary drawing.

When the LUBA is driven closely to the start point, the virtual boundary will be closed automatically. Then it will pop the message：**Planning to complete**. LUBA status will turn to be **Standby** when it's completed.

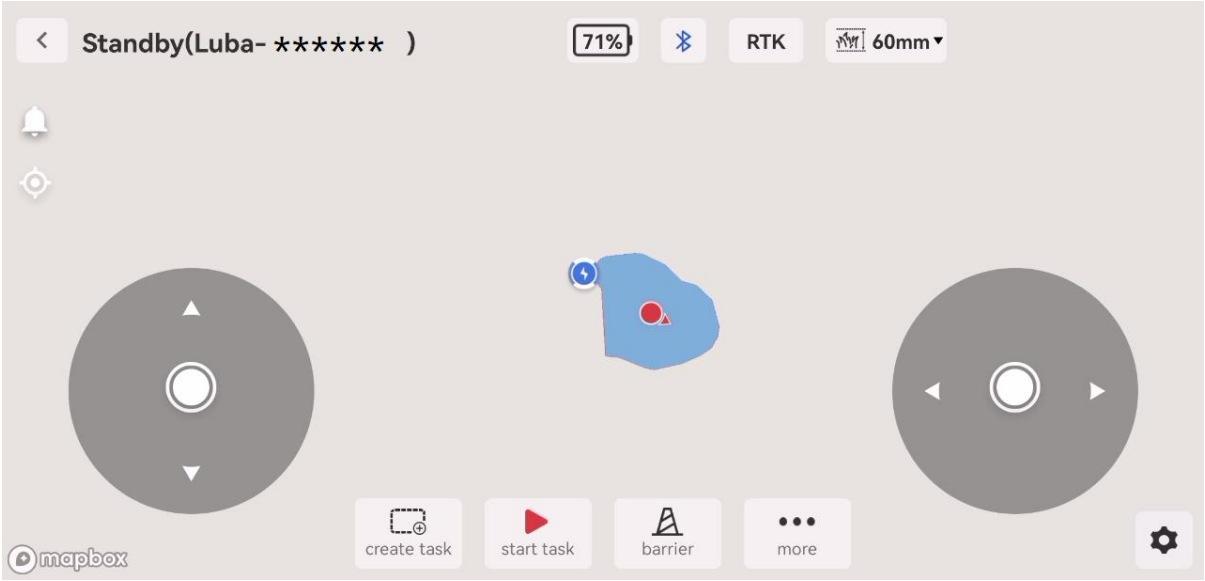

Note:

Users can manually click to complete the virtual boundary drawing. But it may not accurate enough when the boundary closed.

Then draw the no-go-zone areas on the map if needed. Drive the LUBA to the no-go-zones first and then click **Barrier** on the bottom to start drawing the virtual boundary for them. Click **OK** to start.

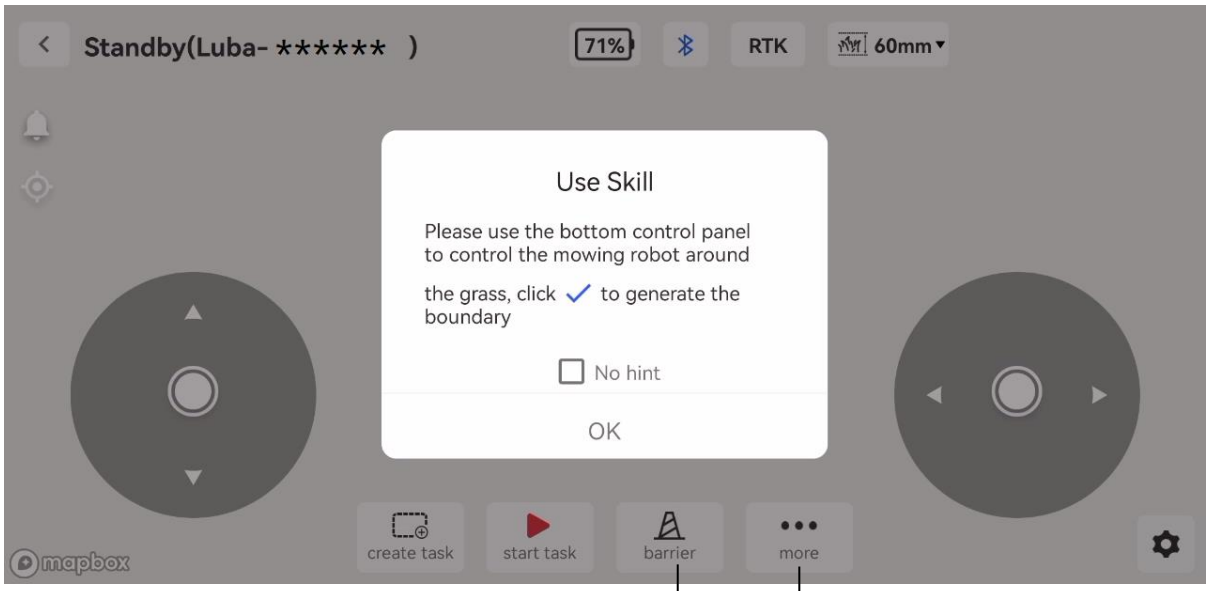

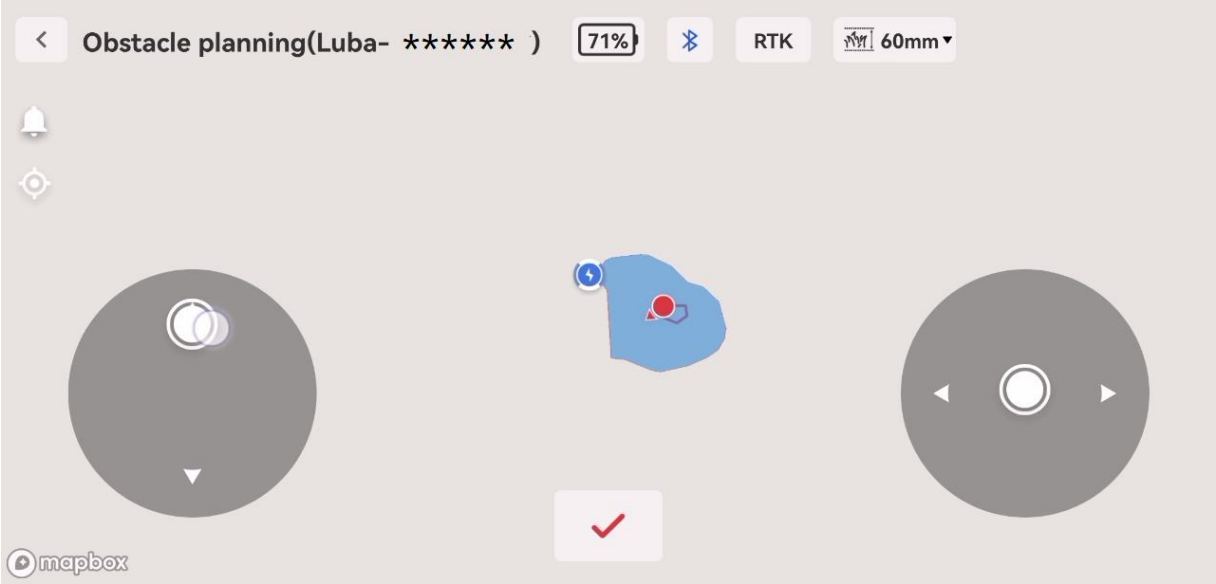

In more plans, users can set the working height of cutting blade, working modes, time, response to rain and device choosing accordingly.

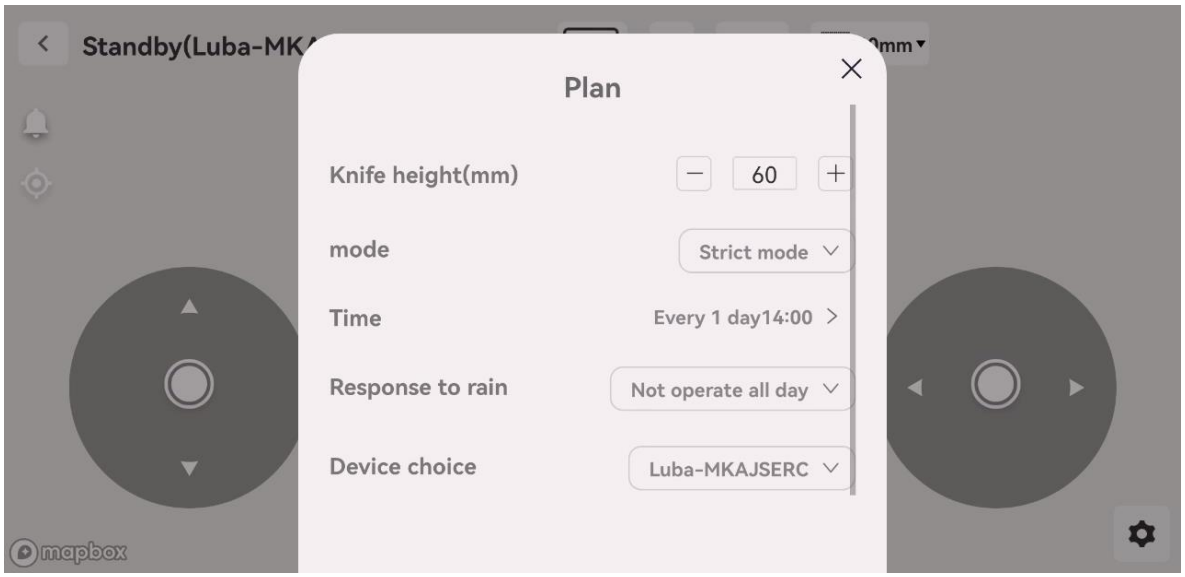

Step3：Start task

After the planning of map has been completed, click Start task at the bottom of the App. Then it will pop up the confirmation message. Confirm the mowing settings and start operation, the LUBA will work automatically.

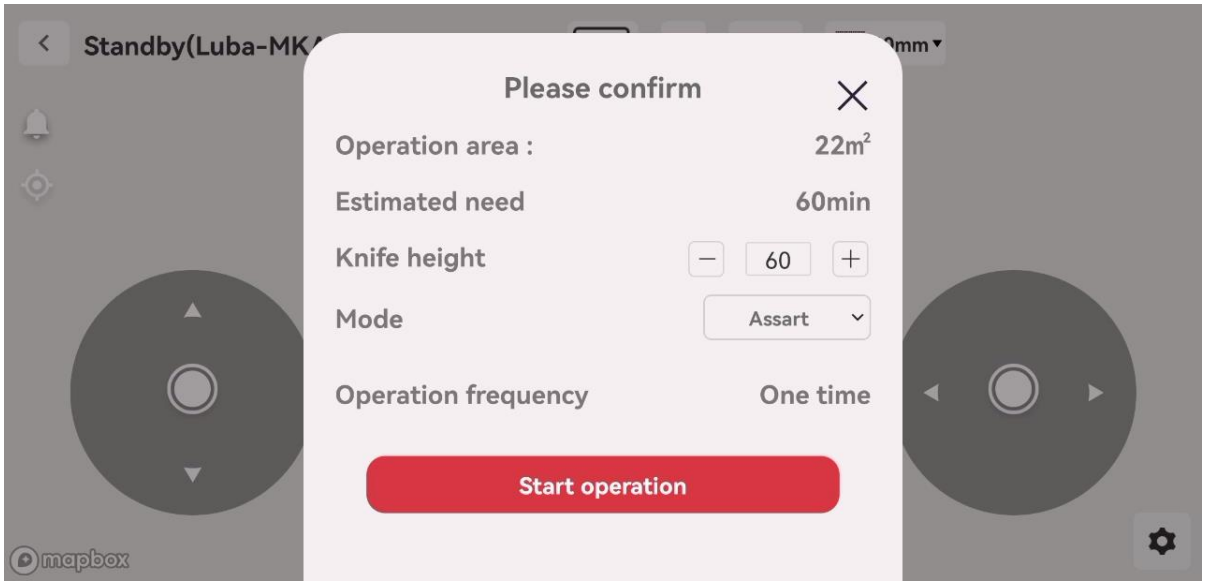

When the LUBA is automatically starting, the status will turn to be **Working**.

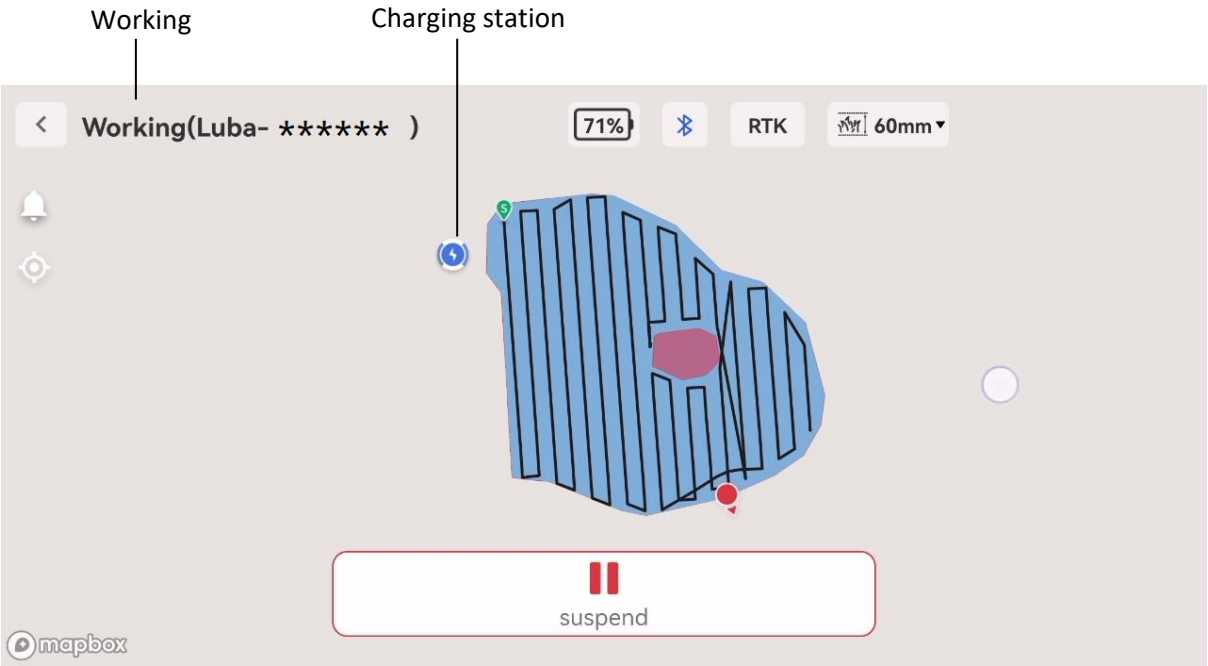

Note：

1. When clicking Start Task to start mowing, the LUBA will go around all the virtual boundaries and no-go-zone areas automatically first. Then it will go to the Start Point of running line to start the mowing task.
2. After the map is completed, the mowing direction and running lines will be generated automatically. The LUBA will work according to the direction and lines.
3. If the map wasn't shown in the middle on the screen of App, users can click on the screen to make it better.

Step4： Return to charging station for recharging when working normally

There are two situations that the LUBA can go back for recharging.

1. The LUBA battery is in low power. About **15% left**. In this condition, LUBA will go back to charging station automatically for recharging.
2. User suspends and ends the current task on the App when it's connected. Then if user clicks **End** on App, the LUBA will go back to charging station automatically. As it's shown in the following figure：

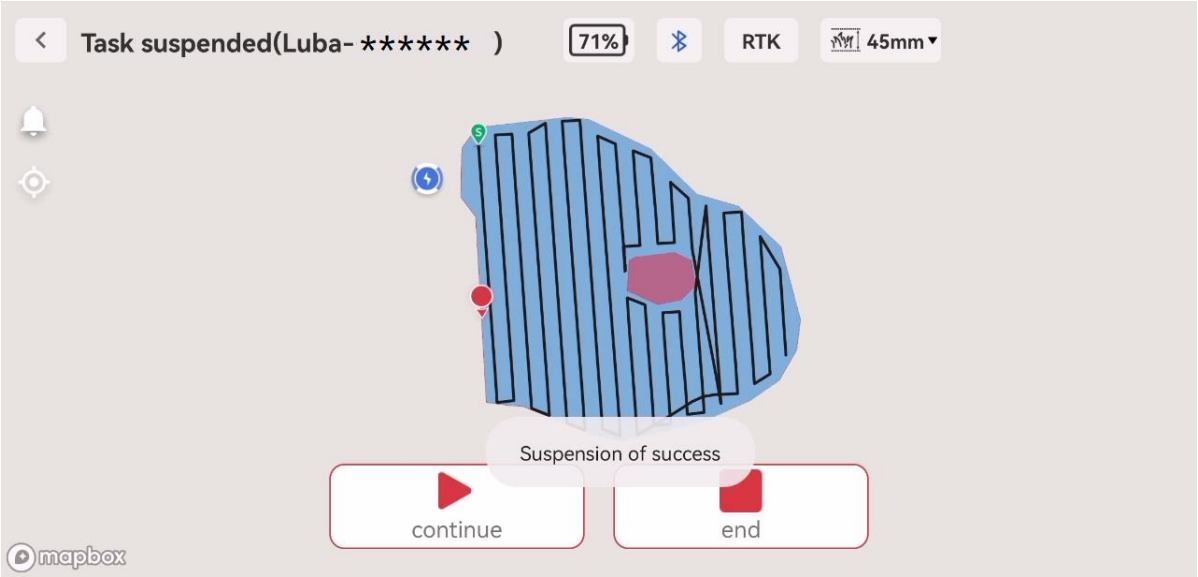

Note：
The LUBA can be driven back for recharging manually on the App as well. But it will need the App connect to the LUBA successfully.

Maintenance

As for maintenance details, please refer to MAMMOTION official website or user manual.

FCC Statement

This device complies with Part 15 of the FCC rules. Operation is subject to the following two conditions: 1) this device may not cause harmful interference, and 2) this device must accept any interference received, including interference that may cause undesired operation.

Note: This equipment has been tested and found to comply with the limits for a Class B digital device, pursuant to part 15 of the FCC Rules. These limits are designed to provide reasonable protection against harmful interference in a residential installation.

This equipment generates uses and can radiate radio frequency energy and, if not installed and used in accordance with the instructions, may cause harmful interference to radio communications. However, there is no guarantee that interference will not occur in particular installation. If this equipment does cause harmful interference to radio or television reception, which can be determined by turning the equipment off and on, the user is encouraged to try to correct the interference by one or more of the following measures:

--Reorient or relocate the receiving antenna.

--Increase the separation between the equipment and receiver.

--Connect the equipment into an outlet on a circuit different from that to which the receiver is connected.

--Consult the dealer or an experienced radio/TV technician for help.

Changes or modifications not expressly approved by the party responsible for compliance could void the user's authority to operate the equipment.

Radiation Exposure Statement

This device complies with RF radiation exposure limits set forth for an uncontrolled environment. This transmitter must not be co-located or operating in conjunction with any other antenna or transmitter. This device must operate with a minimum distance of 20 cm between the radiator and user body.

ISED Statement

This device complies with Industry Canada's licence-exempt RSSs. Operation is subject to the following two conditions:

(1) This device may not cause interference; and

(2) This device must accept any interference, including interference that may cause undesired operation of the device.

The digital apparatus complies with Canadian CAN ICES 3 (B)/NMB 3(B).

L'émetteur/récepteurexempt de licence contenu dans le présent appareil est conforme aux CNR d' Innovation, Sciences et Développementé conomique Canada applicables aux appareils radio exempts de licence. L'exploitation est autorisée aux deux conditions suivantes:

(1) l'appareil ne doit pas produire de brouillage, et

(2) l'appareil doit accepter tout brouillage radioélectrique subi, même si le brouillage est susceptible d'en compromettre le fonctionnement.

l'appareil numérique du ciem conforme canadien peut 3 (b) / nmb 3 (b).

This device meets the exemption from the routine evaluation limits in section 2.5 of RSS 102 and compliance with RSS 102 RF exposure, users can obtain Canadian information on RF exposure and compliance.

cet appareil est conforme à l'exemption des limites d'évaluation courante dans la section 2.5 du cnr - 102 et conformité avec rss 102 de l'exposition aux rf, les utilisateurs peuvent obtenir des données canadiennes sur l'exposition aux champs rf et la conformité.

This equipment complies with Canada radiation exposure limits set forth for an uncontrolled environment. This equipment should be installed and operated with minimum distance 20cm between the radiator & your body.
Cet équipement est conforme Canada limites d'exposition aux radiations dans un environnement non contrôlé. Cet équipement doit être installé et utilisé à une distance minimale de 20 cm entre le radiateur et votre corps.