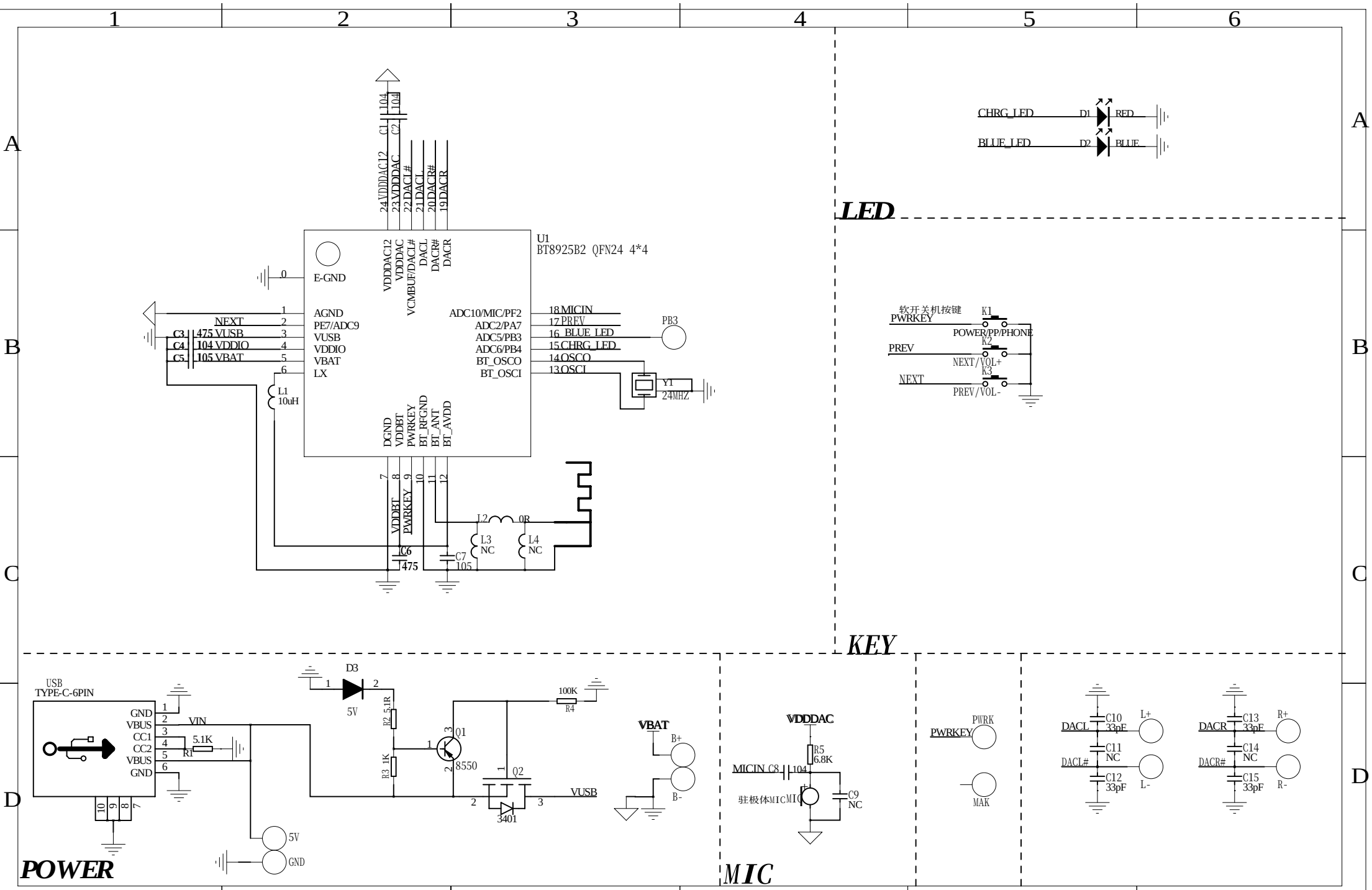
U1
BT8925B2 QFN24 4*4
E-GND
AGND
PE7/ADC9
VUSB
VDDIO
VBAT
LX
ADC10/MIC/PF2
ADC2/PA7
ADC5/PB3
ADC6/PB4
BT_OSCO
BT_OSCI
VDDDAC12
VDDDAC
VCMBUF/DACL#
DACL
DACR#
DACR
DGND
VDDBT
PWRKEY
BT_RFGND
BT_ANT
BT_AVDD
NEXT
PB3
C3 475 VUSB
C4 104 VDDIO
C5 105 VBAT
L1 10uH
Y1 24MHZ
L2 0R
L3 NC
L4 NC
C6 475
C7 105
LED
CHRG_LED
BLUE_LED
D1 RED
D2 BLUE
KEY
软开关机按键
PWRKEY
K1
POWER/PP/PHONE
PREV
K2
NEXT/VOL+
NEXT
K3
PREV/VOL-
POWER
USB
TYPE-C-6PIN
GND
VBUS
CC1
CC2
VIN
5.1K
R1
D3
5V
R2 5.1R
R3 1K
Q1
8550
Q2
3401
100K
R4
VUSB
VBAT
B+
B-
5V
GND
MIC
VDDDAC
R5 6.8K
MICIN C8 104
驻极体MIC
C9 NC
PWRKEY
PWRK
MAK
DACL
C10 33pF
C11 NC
DACL#
C12 33pF
L+
L-
DACR
C13 33pF
C14 NC
DACR#
C15 33pF
R+
R-