SPECIFICATION

產 品 型 號: DESC	A11 50*0.8 10UHwire length45MM	版本 Rev: A.0	客戶 CUST:	
			客户料号 CUST P/N:	

一、尺寸 DIMENSION:(mm)

A	49.5.0±0.5
B	5.0±1.0
C	45MM±2
D	4.5±2
E	46.5±0.5
F	20.5±0.5
G	2.0MM±0.2

二、原理图 SCHEMATIC DIAGRAM:

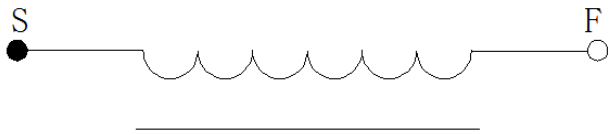

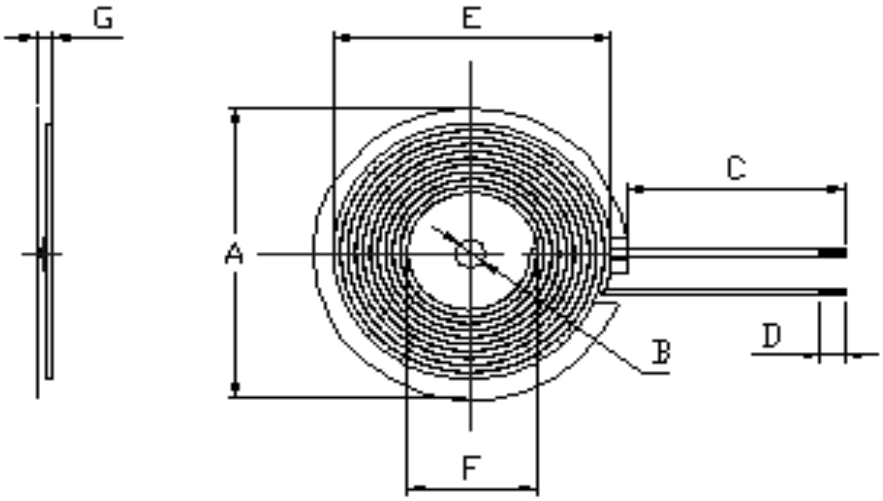

Note: 1. Cross line; 2. Line position wrapped 8mm (ref) width high temperature tape 1-2Ts; 3. coil with circular hard magnetic piece with groove, magnetic piece size 49.5±0.5mm, inner hole 5mm, thickness of 0.8±0.2mm.

三、Winding Specification:

序号 NO.	端子 TERMINAL		线径 WIRE	圈数 Turns	绕线方向 Winding Direction
1	S	F	silk-covered wire 0.08*105P	12Ts	CCW

四、电气特性 ELECTRICAL CHARACTERISTICS:

温度 TEMPERATURE:25±10℃, 湿度 RELATIVE HUMIDITY:65±20%

序号 NO.	项目 ITEM	端子 TERMINAL	标准 SPECIFICATION	测试条件 TEST FREQUENCY	测试仪器 TEST EQUIPMENTS
1	IND.	S-F	4.6uH ±20% Separate coil	100KHz/1.0V	LCZ METER 1062B
2	IND.	S-F	10uH ±10% add magnetic sheet	100KHz/1.0V	LCZ METER 1062B
3	DCR	S-F	≤50mΩ		LCZ METER 502B